Bobby Warren, Mayor
Drew Wasson, Council Position No. 1
Sheri Sheppard, Council Position No. 2
Michelle Mitcham, Council Position No. 3
James Singleton, Council Position No. 4
Gary Wubbenhorst, Council Position No. 5

Austin Bleess, City Manager
Lorri Coody, City Secretary
Justin Pruitt, City Attorney

REGULAR SESSION CITY COUNCIL MEETING PACKET FOR THE MEETING TO BE HELD ON SEPTEMBER 20, 2021

Jersey Village City Council - Regular Meeting Agenda

Notice is hereby given of a Regular Meeting of the City Council of the City of Jersey Village to be held on Monday, September 20, 2021, at 7:00 p.m. at the Civic Center Auditorium, 16327 Lakeview Drive, Jersey Village, Texas, for the purpose of considering the following agenda items. The Mayor and a quorum of the City Council will be physically present at the meeting. James Singleton, Council Position No. 4, may participate in the meeting via videoconference call. All agenda items are subject to action. The City Council reserves the right to meet in closed session on any agenda item should the need arise and if applicable pursuant to authorization by Title 5, Chapter 551, of the Texas Government Code.

A. CALL TO ORDER AND ANNOUNCE A QUORUM IS PRESENT

B. INVOCATION, PLEDGE OF ALLEGIANCE

1. Prayer and Pledge by: Michael Stembridge

C. PRESENTATIONS

1. Presentation of Employee of the Month. *Austin Bleess, City Manager*

2. Proclamation recognizing Tuesday, October 5, 2021 as National Night Out in Jersey Village to provide a unique opportunity for the City of Jersey Village to join forces with thousands of other communities across the country in promoting cooperative, police-community crime prevention efforts. *Bobby Warren, Mayor*

D. CITIZENS' COMMENTS

Citizens who have signed a card and wish to speak to the City Council will be heard at this time. In compliance with the Texas Open Meetings Act, unless the subject matter of the comment is on the agenda, the City staff and City Council Members are prevented from discussing the subject and may respond only with statements of factual information or existing policy. Citizens are limited to five (5) minutes for their comments to the City Council.

E. SUBSTANDARD STRUCTURE – PUBLIC HEARING AND RELATED ITEM

1. Conduct a Public Hearing pursuant to Section 34-253 of the Code, so that the owner or the owner's representatives for the property located at 15905 Juneau Lane, Jersey Village, Texas may appear and show cause 1) why such building or structure should not be declared to be substandard and 2) why the owner should not be ordered to repair, vacate or demolish the building or structure. *Bobby Warren, Mayor*

2. Consider Ordinance No. 2021-35, finding that the structures on or about the property located at 15905 Juneau Lane, Jersey Village, Texas, 77040 (the "property") to be substandard and a public nuisance; ordering the owner of the property to abate the

substandard structures and public nuisance on the property; authorizing the City of Jersey Village, Texas to demolish the structures on the property if the owner of the property fails to abate the substandard structures and public nuisance on the property; authorizing the City of Jersey Village, Texas to assess a lien against the property for the costs of the demolition; and, making other findings and provisions related thereto. *Austin Bleess, City Manager*

F. CITY MANAGER'S REPORT

1. Monthly Fund Balance Report, Enterprise Funds Report, Governmental Funds Report, Property Tax Collection Report – July 2021, General Fund Budget Projections as of August 2021, and Utility Fund Budget Projections – August 2021.
2. Fire Departmental Report and Communication Division's Monthly Report
3. Police Department Monthly Activity Report, Warrant Report, Staffing/Recruitment Report, and Police Open Records Requests
4. Municipal Court Collection Report, Municipal Court Activity Report, Municipal Court Courtroom Activity Report, Speeding and Stop Sign Citations within Residential Areas Report, and Court Proceeds Comparison Report
5. Public Works Departmental Status Report
6. Golf Course Monthly Report, Golf Course Financial Statement Report, Golf Course Budget Summary, and Parks and Recreation Departmental Report
7. Code Enforcement Report

G. CONSENT AGENDA

The following items are considered routine in nature by the City Council and will be enacted with one motion and vote. There will not be separate discussion on these items unless requested by a Council Member, in which event the item will be removed from the Consent Agenda and considered by separate action.

1. Consider approval of the Minutes for the Regular Session Meeting held on August 16, 2021. *Lorri Coody, City Secretary*

2. Consider Resolution No. 2021-55, reviewing and approving the investment policy and investment strategies used for city funds in compliance with the Texas Government Code. *Isabel Kato, Finance Director*

3. Consider Resolution No. 2021-56, appointing Dr. Anh Dang as Health Officer for the City of Jersey Village. *Lorri Coody, City Secretary*

4. Consider Resolution No. 2021-57, approving the 2021 Flood Insurance Assessment. – *Austin Bleess, City Manager*

5. Consider Ordinance No. 2021-36, approving the final Financing Plan and Project Plan for the Tax Increment Reinvestment Zone Number 3. *Austin Bleess, City Manager*

6. Consider Resolution No. 2021-58, authorizing the City Manager to enter into a contract with Total Energy Solutions Co. LLC for the purchase and installation of generators at the Police Department, Fire Department and Village Drive Water Treatment Plant. *Austin Bleess, City Manager*

REGULAR SESSION CITY COUNCIL MEETING PACKET FOR THE MEETING TO BE HELD ON SEPTEMBER 20, 2021

7. Consider Resolution No. 2021-59, authorizing the City Manager to enter into a contract with Aguirre & Fields, LP for design services and construction management of the Seattle Street Reconstruction Project. *Austin Bleess, City Manager*

8. Consider Resolution No. 2021-60, nominating a candidate to serve on the Harris County Appraisal District's Board of Directors. *Lorri Coody, City Secretary*

9. Consider Resolution No. 2021-61, authorizing the City Manager to enter into a contract with Aguirre & Fields for the Preliminary Engineering Report and Permitting of the E127 Project. *Austin Bleess, City Manager*

H. REGULAR AGENDA

1. Consider Resolution No. 2021-62, appointing members to the Planning and Zoning Commission (P&Z) and the Capital Improvements Advisory Committee (CIAC), the Board of Adjustment (BOA), the Building Board of Adjustment and Appeals (BBOAA), the Parks and Recreation Advisory Committee (PRAC), and the Golf Course Advisory Committee (GCAC). *Lorri Coody, City Secretary*

2. Consider Resolution No. 2021-63, selecting an individual to serve on the TML Health Benefits Pool Board of Trustees – Region 14. *Lorri Coody, City Secretary*

3. Consider Resolution No. 2021-64, designating a city representative and an alternate representative to the Houston-Galveston Area Council's 2022 General Assembly. *Lorri Coody, City Secretary*

4. Discuss with possible action either a contract extension with the audit firm of Belt Harris Pechacek, LLLP or the preparation of an RFP for audit services for a period of three year. *Isabel Kato, Finance Director*

I. MAYOR AND COUNCIL COMMENTS

Pursuant to Texas Government Code § 551.0415, City Council Members and City staff may make a reports about items of community interest during a meeting of the governing body without having given notice of the report. Items of community interest include:

- Expressions of thanks, congratulations, or condolence;
- Information regarding holiday schedules;
- An honorary or salutary recognition of a public official, public employee, or other citizen, except that a discussion regarding a change in the status of a person's public office or public employment is not an honorary or salutary recognition for purposes of this subdivision;
- A reminder about an upcoming event organized or sponsored by the governing body;
- Information regarding a social, ceremonial, or community event organized or sponsored by an entity other than the governing body that was attended or is scheduled to be attended by a member of the governing body or an official or employee of the municipality; and
- Announcements involving an imminent threat to the public health and safety of people in the municipality that has arisen after the posting of the agenda.

J. RECESS THE REGULAR SESSION

Recess the Regular Session to Convene into Executive Session pursuant to the Texas Open Meetings Act, Government Code Section 551.074 – Personnel Matters, Section 551.087 – Economic Development Negotiations, Section 551.072 – Deliberations about Real Property, and Section 551.071 – Consult Attorney.

REGULAR SESSION CITY COUNCIL MEETING PACKET FOR THE MEETING TO BE HELD ON SEPTEMBER 20, 2021

K. EXECUTIVE SESSION

1. Pursuant to the Texas Open Meetings Act Section 551.074 - Personnel Matters, conduct an Executive Session in order to deliberate the appointment, employment, evaluation, reassignment, duties, discipline, or dismissal of the City Secretary. *City Council*

2. Pursuant to the Texas Open Meetings Act Section 551.074 - Personnel Matters, conduct an Executive Session in order to deliberate the appointment, employment, evaluation, reassignment, duties, discipline, or dismissal of the City Manager. *City Council*

3. Pursuant to the Texas Open Meeting Act Section 551.087 Deliberation Regarding Economic Development Negotiations and Section 551.071 Consultations with Attorney, a closed meeting to deliberate information from a business prospect that seeks to locate in the City. *City Council*

4. Pursuant to the Texas Open Meeting Act Section 551.087 Deliberation Regarding Economic Development Negotiations, Section 551.072 Deliberations about Real Property, and Section 551.071 Consultations with Attorney, a closed meeting to deliberate information from a business prospect that the City seeks to locate in Jersey Village TIRZ Number 2, economic development negotiations, including the possible purchase, exchange or value of real property, related thereto, and to discuss legal matters regarding contractual obligations of the City under existing contracts related to Jersey Village TIRZ Number 2. *City Council*

L. ADJOURN EXECUTIVE SESSION

Adjourn the Executive Session, stating the date and time the Executive Session ended and Reconvene the Regular Session.

M. RECONVENE REGULAR SESSION

1. Consider setting the City Secretary's compensation for budget year 2021-2022. *Bobby Warren, Mayor*

2. Consider setting the City Manager's compensation for budget year 2021-2022 and consider employment agreement amendments. *Bobby Warren, Mayor*

3. Discuss and take appropriate action on a Resolution regarding items discussed in closed session regarding economic development negotiations, including the possible purchase, exchange or value of real property, related thereto, and contractual obligations of the City under existing contracts related to Jersey Village TIRZ Number 2. *Austin Bleess, City Manager*

N. ADJOURN

CERTIFICATION

I, the undersigned authority, do hereby certify in accordance with the Texas Open Meeting Act, the Agenda is posted for public information, at all times, for at least 72 hours preceding the scheduled time of the meeting on the bulletin board located at City Hall, 16327 Lakeview, Jersey Village, TX 77040, a place convenient and readily accessible to the general public at all times, and said Notice was posted on September 15, 2021 at 4:00 p.m. and remained so posted until said meeting was convened.

_____

Lorri Coody, TRCM, City Secretary

REGULAR SESSION CITY COUNCIL MEETING PACKET FOR THE MEETING TO BE HELD ON SEPTEMBER 20, 2021

In compliance with the Americans with Disabilities Act, the City of Jersey Village will provide for reasonable accommodations for persons attending City Council meetings. Request for accommodations must be made to the City Secretary by calling 713 466-2102 forty-eight (48) hours prior to the meetings. Agendas are posted on the Internet Website at www.jerseyvillage.info.

"Pursuant to Section 30.06, Penal Code (trespass by license holder with a concealed handgun), a person licensed under Subchapter H, Chapter 411, Government Code (handgun licensing law), may not enter this property with a concealed handgun."

"Pursuant to Section 30.07, Penal Code (trespass by license holder with an openly carried handgun), a person licensed under Subchapter H, Chapter 411, Government Code (handgun licensing law), may not enter this property with a handgun that is carried openly."

REGULAR SESSION CITY COUNCIL MEETING PACKET FOR THE MEETING TO BE HELD ON SEPTEMBER 20, 2021

B. INVOCATION, PLEDGE OF ALLEGIANCE

1. Prayer and Pledge by: Michael Stembridge

CITY COUNCIL
CITY OF JERSEY VILLAGE, TEXAS
AGENDA REQUEST

AGENDA DATE: September 20, 2021

AGENDA ITEM: C1

AGENDA SUBJECT: Presentation of Employee of the Month Award for September 2021.

Department/Prepared By: Lorri Coody **Date Submitted:** September 1, 2021

EXHIBITS: Employee of the Month Program
September 2021 – Employee of the Month – Stacy Jones

BUDGETARY IMPACT:	Required Expenditure:	$
	Amount Budgeted:	$
	Appropriation Required:	$

CITY MANAGER APPROVAL:

BACKGROUND INFORMATION:

The Employee of the Month Program was developed to encourage recognition of Jersey Village employees who show exemplary individual achievement, contribution, and performance in their jobs. These individuals consistently exhibit a positive and supportive attitude and make contributions beyond the usual expectations of their employment.

For more information about the program, please see the attached Employee of the Month Program document.

RECOMMENDED ACTION:

N/A

REGULAR SESSION CITY COUNCIL MEETING PACKET FOR THE MEETING TO BE HELD ON SEPTEMBER 20, 2021

Employee of the Month Program

The Employee of the Month Program was developed to encourage recognition of Jersey Village employees who show exemplary individual achievement, contribution, and performance in their jobs. These individuals consistently exhibit a positive and supportive attitude and make contributions beyond the usual expectations of their employment.

Criteria for Employee of the Month

The following criteria will be used in selecting an Employee of the Month (EOM):

1. The nominee must be a full-time employee having worked a minimum of one (1) year and is not currently on probationary status at the time of nomination. Department Heads, part-time staff, and volunteers are not eligible.
2. Employees can receive the EOM recognition more than once; however, there must be a break of a minimum of two (2) years between awards.
3. The nominee must be approved by his/her supervisor prior to being named as the recipient of the award.
4. Nominations not selected as the EOM can be reconsidered up to one year from the date first received.

A Jersey Village employee who demonstrates the following will be eligible for the EOM award:

1. Employee must demonstrate a willingness to take initiative beyond regular job assignments, resulting in inspiring and supporting the performance and achievement of others.
2. Employee must demonstrate a high quality of work and a commitment to carrying out job responsibilities, be an asset to the department, and serves as a role model for others.
3. Employee must demonstrate the ability to work as a team member, be consistently dependable and punctual in reporting for duty, completes assignments on time and have a distinguished attendance record.

Process

1. Forms and criteria on the EOM program will be available from the City Manager or Department Heads.
2. Submit completed forms to the Department Head. Forms must be signed by the nominator or sent from the nominators email address. Nominations are accepted at any time, but must be submitted by the 25th of the month to be eligible for the award in the upcoming month.
3. The City Manager will go through nominations and select a winner based on the above criteria.

Awards

The EOM Program will provide awards to such employees by means that is fair, with equal consideration of all eligible staff.

In addition to the awards the Mayor and the Department Head will present the award to the employee at a City Council Meeting and the employee will be recognized on the city website, social media, and via other mediums.

Employee of the Month Nomination Form

Name of Nominee: _____ Department: _____

Job Title: _____

Please provide specific, detailed examples to support your nomination. The information you provide will be used by the City Manager to determine the recipient of this award. These activities should have occurred within the last 60 days. Please attach additional pages if needed.

Describe how the employee demonstrates a willingness to take initiative beyond regular job assignments, resulting in inspiring and supporting the performance and achievement of others.

Explain how the employee demonstrates a high quality of work and a commitment to carrying out job responsibilities, is an asset to the department, and serves as a role model for others.

Other information pertinent to the nomination

Nominated by: _____ Date: _____

Department: _____
Please submit completed form to your Department Head.

REGULAR SESSION CITY COUNCIL MEETING PACKET FOR THE MEETING TO BE HELD ON SEPTEMBER 20, 2021

September 2021
Employee Of The Month

Our September 2021 Employee of the Month is Stacy Jones. Stacy started with the City in February 2017 as a Telecommunications Officer.

In the past year, Dispatch has gone through a lot of changes making our training program incomplete and full of outdated material. CTO Stacy Jones was asked if she would take on the task of revamping out training program. She jumped at the chance for this project. Stacy has spent countless hours in the last few months, doing research on how to structure our new training program. During this time, she has worked tirelessly bringing the program up to date with all the new changes and formatting the material to flow better to improve the learning process of our new employees. Stacy has done a wonderful job breaking different tasks down into different phases to give the trainees a firm foundation before going on to the next task. This will enable the trainer to decide when to move forward, when to assign remedial, and when to bring the supervisor in because the trainee is not making the cut. She has devised a new system that any trainer will be able to pick up the material and train any trainee no matter where they are in the program.



Stacy has also gone above and beyond by getting with other departments to get their input into the training program to make it more well-rounded and complete. She has worked with Chief Mark Bitz who will be doing a presentation for trainees during the fire portion of training. She has also asked Cpt. Trent Herrod to give an in-depth tour of all the apparatus, their tools, and their functions. She has worked with Lt. Heath Hawley to come up with a guide for new dispatchers to learn how the police department wants trainees to question callers for police responses. Stacy has also created all new training forms to go with each phase which really encompass what is being taught during that phase. She has really done an exceptional job with this undertaking. Not only is the new program thorough, but it is also uniform so that every trainee is taught the same information in the same way every time.

Stacy has started training our new dispatcher with this program. She is using this an opportunity for continuous improvement by making sure it works in the real world of training situations.

Congratulations Stacy! Thank you for everything you do for Jersey Village!

PROCLAMATION
NATIONAL NIGHT OUT 2021

***WHEREAS**, the National Association of Town Watch (NATW) and Target is sponsoring a unique, nationwide crime, drug and violence prevention program on October 5, 2021 entitled "National Night Out;" and*

***WHEREAS**, the "38th Annual National Night Out" provides a unique opportunity for the City of Jersey Village to join forces with thousands of other communities across the country in promoting cooperative, police-community crime prevention efforts; and*

***WHEREAS**, Jersey Village Police Department plays a vital role in assisting the Harris County Sheriff's Department through joint crime, drug and violence prevention efforts in Jersey Village and is supporting "National Night Out 2021" locally; and*

***WHEREAS**, it is essential that all citizens of Jersey Village be aware of the importance of crime prevention programs and impact that their participation can have on reducing crime, drugs and violence in Jersey Village; and*

***WHEREAS**, police-community partnerships, neighborhood safety, awareness and cooperation are important themes of the "National Night Out" program;*

***NOW, THEREFORE, I, MAYOR BOBBY WARREN**, do hereby call upon all citizens of Jersey Village to join the Jersey Village Police Department and the National Association of Town Watch in supporting "38th Annual National Night Out" on October 5, 2021.*

***FURTHER, LET IT BE RESOLVED THAT I, MAYOR BOBBY WARREN,** do hereby proclaim Tuesday, October 5, 2021 as **"NATIONAL NIGHT OUT"** in Jersey Village.*

_____
Bobby Warren, Mayor

CITY OF JERSEY VILLAGE TEXAS A TEXAS STAR COMMUNITY

ATTEST:

_____
Lorri Coody, City Secretary
Dated: September 20, 2021

C. CITIZENS' COMMENTS

Citizens who have signed a card and wish to speak to the City Council will be heard at this time. In compliance with the Texas Open Meetings Act, unless the subject matter of the comment is on the agenda, the City staff and City Council Members are prevented from discussing the subject and may respond only with statements of factual information or existing policy. Citizens are limited to five (5) minutes for their comments to the City Council.

CITY COUNCIL
CITY OF JERSEY VILLAGE, TEXAS
AGENDA REQUEST

AGENDA DATE: September 20, 2021 **AGENDA ITEM**: E1

AGENDA SUBJECT: Conduct a Public Hearing pursuant to Section 34-253 of the Code, so that the owner or the owner's representatives for the property located at 15905 Juneau Lane, Jersey Village, Texas may appear and show cause 1) why such building or structure should not be declared to be substandard and 2) why the owner should not be ordered to repair, vacate or demolish the building or structure.

Department/Prepared By: Lorri Coody, City Secretary on behalf of the Building Official

Date Submitted: August 25, 2021

EXHIBITS:
EX A - Public Hearing Notice
EX B - Building Official's Report and Required Notice
EX C - Certification of Mailing Required Notice
EX D - Certification of Posting Notice at 15905 Juneau Lane
Script for Public Hearing

BUDGETARY IMPACT:

Required Expenditure:	$
Amount Budgeted:	$
Appropriation Required:	$

CITY MANAGER APPROVAL:

BACKGROUND INFORMATION:

The Building Official of the City of Jersey Village has reported that the buildings and structures located at 15905 Juneau Lane, located within the City, is substandard and a public nuisance.

In accordance with Chapter 34 of the Code of Ordinances of the City of Jersey Village (the Code), the City Council must conduct a public hearing so that the owner or the owner's representatives of the property may appear and show cause 1) why such buildings or structures should not be declared to be substandard and 2) why the owner should not be ordered to repair, vacate or demolish the buildings or structures on the Property.

All required notices of the hearing have been sent in accordance with the Code to the persons asserting or likely to have an ownership in the Property.

This item is to conduct the public hearing.

RECOMMENDED ACTION:

Conduct a Public Hearing pursuant to Section 34-253 of the Code, so that the owner or the owner's representatives for the property located at 15905 Juneau Lane, Jersey Village, Texas may appear and show cause 1) why such building or structure should not be declared to be substandard and 2) why the owner should not be ordered to repair, vacate or demolish the building or structure.

REGULAR SESSION CITY COUNCIL MEETING PACKET FOR THE MEETING TO BE HELD ON SEPTEMBER 20, 2021

CITY OF JERSEY VILLAGE
NOTICE OF PUBLIC HEARING

NOTICE is hereby given for a public hearing to be conducted on September 20, 2021 at 7:00 p.m. by the City of Jersey Village City Council in the Civic Center at 16327 Lakeview Drive, Jersey Village, Texas. The City Council has received a report from the City's Building Official regarding the building or structure located at 15905 Juneau Lane (the "Property") in the City of Jersey Village. The report indicates the presence of certain conditions on and about the building or structure on the Property that, if true, would render such the building or structure substandard and a public nuisance pursuant to Chapter 34 of the Code of Ordinances of the City of Jersey Village (the "Code").

Pursuant to Section 34-253 of the Code, a hearing will be held so that the owner or the owner's representatives may appear and show cause 1) why such building or structure should not be declared to be substandard and 2) why the owner should not be ordered to repair, vacate or demolish the building or structure. On the day of the hearing City Council may determine whether or not the building or structure on the Property is substandard and may issue such orders as shall appear reasonably necessary to prevent the building or structure from being a hazard to life or property and to eliminate the substandard qualities.

The City of Jersey Village public facilities are wheelchair accessible and accessible parking spaces are available. Requests for accommodations or interpretive services must be made 48 hours prior to this meeting. Please contact ADA Coordinator at (713) 466-2102 or FAX (713) 466-2177 for further information.

Lorri Coody, City Secretary
City of Jersey Village, Texas

Posted to Website: September 7, 2021 at 1 PM
Posted to Bulletin Board: September 8, 2021 at 9 AM



Inspection Report 15905 Juneau Lane

Prepared by BBG Consulting

SESSION CITY COUNCIL MEETING PACKET FOR THE MEETING TO BE HELD ON SEPTEMBI

- **Article VI – Substandard Structures**

- Any building or structure which has any of the following defects shall be deemed a substandard building or structure and constitute a hazard to the health, safety, and welfare of the citizens:

Substandard Building as defined by Section 34-250 City of Manvel Code of Ordinances

SESSION CITY COUNCIL MEETING PACKET FOR THE MEETING TO BE HELD ON SEPTEMBE

1. Any building or structure that has become deteriorated or damaged through exposure to the elements including, without limitation, flood, wind, hail or rain, or damage through fire or by any other cause, to the extent that either the roof, windows or doors, or portions of the house, building or structure which protect from the weather will no longer reasonably protect from the weather.

2. Any building or structure which is so structurally deteriorated or damaged that it is in danger of collapse or which cannot be expected to withstand the reasonably anticipated storms or hurricanes.

3. Any building used for the occupancy of one or more persons which is not connected to an approved public sanitary sewer or does not provide connection to a properly installed and approved septic system.

4. Any building or structure not constructed or maintained in conformity with the fire code of the city when such nonconformity constitutes a serious hazard to the safety of persons or property.

5. Any building or structure not wired in conformity with the electrical code of the city when such nonconformity constitutes a serious hazard to the safety of persons or property.

6. Any building or structure not constructed in conformity with the plumbing code of the city when such nonconformity constitutes a serious hazard to the safety of persons or property.

SESSION CITY COUNCIL MEETING PACKET FOR THE MEETING TO BE HELD ON SEPTEMBI

7. Any building or structure not constructed in conformity with the building code of the city when such nonconformity constitutes a serious hazard to the safety of persons or property.

8. Any building or structure or any portion thereof has settled to such an extent that the walls or other structural portions have materially less resistance to winds or earthquakes than is required in the case of new construction.

9. Any building or structure by reason of obsolescence, dilapidated condition, deterioration, damage, electrical wiring, gas connections, heating apparatus or other causes, is in such condition to be a fire hazard and is so situated as to endanger life or other buildings or property in the vicinity or provide a ready fuel supply to augment the spread and intensity of fire arising from any cause.

10. Any building or structure so constructed or maintained as to constitute a menace to health or safety, including:

11. All conditions conducive to the harboring of rats, snakes, mice, other disease carrying animals or insects reasonably calculated to spread disease.

12. Conditions hazardous to the safety of persons or property, such as inadequate bracing, structural support, construction or the presence of deteriorated materials.

13. Conditions constituting an attractive nuisance creating a hazard to the health or safety of minors.

SESSION CITY COUNCIL MEETING PACKET FOR THE MEETING TO BE HELD ON SEPTEMBI

- On August 9, 2021, an inspection of the property located at 15905 Juneau Lane, Jersey Village, TX was performed.
- The inspection was conducted according to Section 54 of the Texas Local Government Code and the City of Jersey Village Ordinance.
- The Property appears to be abandoned, in disrepair, and in violation of several provisions of the City's Code of Ordinances.
- The following pages outline the violations in question.



SESSION CITY COUNCIL MEETING PACKET FOR THE MEETING TO BE HELD ON SEPTEMB



15905 Juneau Drive – Jersey Village – 8/9/2021

(1) Inadequate sanitation, including, but not limited to:

- General dilapidation or improper maintenance.

SESSION CITY COUNCIL MEETING PACKET FOR THE MEETING TO BE HELD ON SEPTEMBE



15905 Juneau Drive – Jersey Village – 8/9/2021

(1) Inadequate sanitation, including, but not limited to:

- General dilapidation or improper maintenance.

SESSION CITY COUNCIL MEETING PACKET FOR THE MEETING TO BE HELD ON SEPTEMBE



15905 Juneau Drive – Jersey Village – 8/9/2021

(2) Structural hazards, including, but not limited to:

- Observed deteriorated or inadequate foundation.
- Observed Members of ceilings, roofs, ceiling and roof support or other horizontal members which sag, split or buckle due to defective material or deterioration.

SESSION CITY COUNCIL MEETING PACKET FOR THE MEETING TO BE HELD ON SEPTEMBE



15905 Juneau Drive – Jersey Village – 8/9/2021

(2) Structural hazards, including, but not limited to:

- Observed deteriorated or inadequate foundation.
- Observed Members of ceilings, roofs, ceiling and roof support or other horizontal members which sag, split or buckle due to defective material or deterioration.

SESSION CITY COUNCIL MEETING PACKET FOR THE MEETING TO BE HELD ON SEPTEMBE



15905 Juneau Drive – Jersey Village – 8/9/2021

(3) Observed faulty weather protection, including, but not limited to:

- Deteriorated, crumbling, or loose plaster.
- Deteriorated or ineffective waterproofing of exterior walls, roof, or foundation.
- Lack or defective weather protection of exterior wall coverings, including lack of paint or weathering due to lack of paint or other approved protective covering.
- Broken, rotted, split, or buckled exterior wall coverings or roof coverings.

SESSION CITY COUNCIL MEETING PACKET FOR THE MEETING TO BE HELD ON SEPTEMBE



15905 Juneau Drive – Jersey Village – 8/9/2021

(3) Observed faulty weather protection, including, but not limited to:

- Deteriorated, crumbling, or loose plaster.
- Deteriorated or ineffective waterproofing of exterior walls, roof, or foundation.
- Lack or defective weather protection of exterior wall coverings, including lack of paint or weathering due to lack of paint or other approved protective covering.
- Broken, rotted, split, or buckled exterior wall coverings or roof coverings.

SESSION CITY COUNCIL MEETING PACKET FOR THE MEETING TO BE HELD ON SEPTEMBE

Sec. 34-281. - Maintenance of structures.

The exterior of every structure, including accessory structures and fences, shall be maintained in good repair. The same shall be maintained free of broken glass, loose shingles, crumbling or broken stone or brick, excessive peeling paint or other conditions reflective of deterioration or inadequate maintenance to the end that the structure itself may be preserved, safety and fire hazards may be eliminated and adjoining properties may be protected from blighting influences.

SESSION CITY COUNCIL MEETING PACKET FOR THE MEETING TO BE HELD ON SEPTEMBI

Sec. 34-251. ACTION FOR REPAIR OR DEMOLITION OF STRUCTURE.

All substandard buildings or structures within the provisions of this article which shall constitute a hazard to the health, safety or general welfare of its occupants, the citizens of the city or to the public are declared to be public nuisances and shall be ordered to be repaired, vacated or demolished as provided in this article.

SESSION CITY COUNCIL MEETING PACKET FOR THE MEETING TO BE HELD ON SEPTEMBI

Sec. 34-254. - Standards for orders.

The following standards may be followed by the city council in ordering the repair, vacation or demolition of a substandard building or structure:

1. If the substandard building or structure can reasonably be repaired so that it will no longer be in a condition which is in violation of the provisions of this article, it shall be ordered repaired.

2. If the substandard building or structure is in such condition as to make it dangerous to the health, morals, safety or general welfare of its occupants, the citizens of the city or to the public, it shall be ordered to be vacated.

3. In any case where a substandard building or structure cannot reasonably be repaired so that its existence will no longer be in violation of the provisions of this article, it shall be demolished.

SESSION CITY COUNCIL MEETING PACKET FOR THE MEETING TO BE HELD ON SEPTEMBI

CITY OF JERSEY VILLAGE
CERTIFICATION OF PUBLIC HEARING NOTICE REQUIREMENTS

Reason for Public Hearing:

To provide for the owner or the owner's representatives to appear and show cause 1) why such building or structure should not be declared to be substandard and 2) why the owner should not be ordered to repair, vacate or demolish the building or structure. On the day of the hearing City Council may determine whether or not the building or structure on the Property is substandard and may issue such orders as shall appear reasonably necessary to prevent the building or structure from being a hazard to life or property and to eliminate the substandard qualities.

I, Michelle Killebrew, Office of the Building Official for the City of Jersey Village, Harris County, Texas, do hereby certify and attest that on August 27, 2021, 2021, written notices pertaining to the substandard structures located at 15905 Juneau Lane, Jersey Village, Texas 77040 were mailed via certified mail return receipt requested and/or email if applicable to those listed in the following table at the address or email address listed as follows:

Name of Addressee	Address	Certified Mail No. & Date of Mailing
Wayne Prescott	**17223 Blushing Pear Court, Houston Texas 77084**	70210350000105107677
Sheila Prescott	15905 Juneau Lane, Jersey Village, Texas 77040	70210350000105107684

Signed this the 7 day of Sept, 2021.

Michelle Killebrew, Office of the Building Official
City of Jersey Village, Texas

THE STATE OF TEXAS §
COUNTY OF HARRIS §

BEFORE ME, the undersigned authority, this day personally appeared Michelle Killebrew, a person known to me to be the person whose name is subscribed to the foregoing instrument and acknowledged to me that he/she executed the same for the purpose and consideration therein expressed.

GIVEN UNDER my hand and seal of office this 7TH day of September, 2021

TAMEECA WILLIAMS
Notary ID #131094242
My Commission Expires
May 3, 2025

REGULAR SESSION CITY COUNCIL MEETING PACKET FOR THE MEETING TO BE HELD ON SEPTEMBER 20, 2021

CITY OF JERSEY VILLAGE
CERTIFICATION OF PUBLIC HEARING NOTICE REQUIREMENTS

Reason for Public Hearing:

To provide for the owner or the owner's representatives to appear and show cause 1) why such building or structure should not be declared to be substandard and 2) why the owner should not be ordered to repair, vacate or demolish the building or structure. On the day of the hearing City Council may determine whether or not the building or structure on the Property is substandard and may issue such orders as shall appear reasonably necessary to prevent the building or structure from being a hazard to life or property and to eliminate the substandard qualities.

I, Michelle Killebrew, Office of the Building Official for the City of Jersey Village, Harris County, Texas, do hereby certify and attest that on Sept 7, 2021, written notices pertaining to the substandard structures located at 15905 Juneau Lane, Jersey Village, Texas 77040 were mailed via certified mail return receipt requested and/or email if applicable to those listed in the following table at the address or email address listed as follows:

Name of Addressee	Address	Certified Mail No. & Date of Mailing
Arnon Forster Prescott Jr	30876 King Valley Way Conifer, Colorado 80433	9/7/2021 70210350000105107776

Signed this the 7th day of September, 2021.

Michelle Killebrew, Office of the Building Official
City of Jersey Village, Texas

THE STATE OF TEXAS §
COUNTY OF HARRIS §

BEFORE ME, the undersigned authority, this day personally appeared Michelle Killebrew, a person known to me to be the person whose name is subscribed to the foregoing instrument and acknowledged to me that he/she executed the same for the purpose and consideration therein expressed.

GIVEN UNDER my hand and seal of office this 7th day of Sept., 2021

Atlantis Conner

NOTARY PUBLIC STATE OF TEXAS
Atlantis Skyy Conner
My Commission Expires
06/23/2025
ID No. 133173108

CITY OF JERSEY VILLAGE
A CERTIFICATION OF PUBLIC HEARING POSTING

Reason for Public Hearing:

To provide for the owner or the owner's representatives to appear and show cause 1) why such buildings or structures should not be declared to be substandard and 2) why the owner should not be ordered to repair, vacate or demolish the building or structure. On the day of the hearing City Council may determine whether or not the building or structure on the Property is substandard and may issue such orders as shall appear reasonably necessary to prevent the buildings or structures from being a hazard to life or property and to eliminate the substandard qualities.

I, Michelle Killebrew, Office of the Building Official for the City of Jersey Village, Texas do hereby certify that:

On August 27, 2021, at least ten days prior to the date of the hearing, I posted a notice on the garage door of the property located at **15905 Juneau Lane, Jersey Village, Texas** which is the subject of this hearing, indicating the type of relief sought or the proposed change in status of the property as well as the date, time and place of the hearing.

Signed this the 7th day of September, 2021.

Michelle Killebrew, Office of the Building Official
City of Jersey Village, Texas

THE STATE OF TEXAS §
COUNTY OF HARRIS §

BEFORE ME, the undersigned authority, this day personally appeared Michelle Killebrew, a person known to me to be the person whose name is subscribed to the foregoing instrument and acknowledged to me that he/she executed the same for the purpose and consideration therein expressed.

GIVEN UNDER my hand and seal of office this 7th day of September, 2021.

Atlantis Skyy Conner

NOTARY PUBLIC STATE OF TEXAS
Atlantis Skyy Conner
My Commission Expires
06/23/2025
ID No. 133173108

REGULAR SESSION CITY COUNCIL MEETING PACKET FOR THE MEETING TO BE HELD ON SEPTEMBER 20, 2021

MAYOR - Script for Public Hearings on September 20, 2021

1. **Read Item on the Agenda**

2. **Confirm that all meeting posting requirements have been met**

3. **Call upon** the City's Building Official to give the report detailing the structural deficiencies and recommending that the structure located at 15905 Juneau Lane be repaired or demolished.

4. **Call upon the lienholders, mortgagees, or owners of the property** present to give them an opportunity to be heard and to address the nuisance issues as they relate to the minimum standards, including the scope of the work and financial capability of repairing the structure located at 15905 Juneau Lane in Jersey Village, Texas.

5. **Open the public hearing as follows:**

   I now call to order this public hearing. Everyone desiring to speak on behalf of or against the recommended action shall give his name and address and will be given 5 minutes to present information during the meeting.

   The purpose of today's hearing is to provide for the owner or the owner's representatives of the property located at 15905 Juneau Lane in Jersey Village, Texas to appear and show cause 1) why such building or structure should not be declared to be substandard and 2) why the owner should not be ordered to repair, vacate or demolish the building or structure. The burden is on the owner, lienholder, or mortgagee to demonstrate the scope of the work required to comply with the ordinance and the time it will take to perform the work.

6. **Call the first person signing up to speak.**

7. **(After everyone has spoken . . . or if no one desires to speak, finish the meeting with the following)**

   There being no one (else) desiring to speak, I now close this public hearing being held to provide for the owner or the owner's representatives of the property located at 15905 Juneau Lane in Jersey Village, Texas to appear and show cause 1) why such building or structure should not be declared to be substandard and 2) why the owner should not be ordered to repair, vacate or demolish the building or structure.

8. **Call upon the lienholders, mortgagees, or owners of the property** for any closing comments.

9. **Call upon Council Members to ask questions of hearing participants.**

10. **Once all questions have been addressed. Call the next item on the meeting agenda.**

CITY COUNCIL
CITY OF JERSEY VILLAGE, TEXAS
AGENDA REQUEST

AGENDA DATE: September 20, 2021 **AGENDA ITEM**: E2

AGENDA SUBJECT: Consider Ordinance No. 2021-35, finding that the structures on or about the property located at 15905 Juneau Lane, Jersey Village, Texas, 77040 (the "property") to be substandard and a public nuisance; ordering the owner of the property to abate the substandard structures and public nuisance on the property; authorizing the City of Jersey Village, Texas to demolish the structures on the property if the owner of the property fails to abate the substandard structures and public nuisance on the property; authorizing the City of Jersey Village, Texas to assess a lien against the property for the costs of the demolition; and, making other findings and provisions related thereto.

Department/Prepared By: Lorri Coody on behalf of the Building Official

Date Submitted: September 14, 2021

EXHIBITS: Ordinance No. 2021-35
EXA – Building Official's Report
EXB – Abatement Requirements (TBD on September 20, 2021)

BACKGROUND INFORMATION:

City Council has heretofore conducted the public hearing in connection with the substandard structure located at 15905 Juneau Lane.

City Council must now discuss the evidence presented, in order to determine if the Property and the structures on the Property located at 15905 Juneau Lane are substandard; and if the conditions of the structures on the Property constitute a nuisance and are a hazard to the health, safety, and welfare of the citizens of Jersey Village and likely to endanger persons and property.

Should City Council find that the Property is in violation of the City's Code and ordinances; a proposed Ordinance is included for consideration. The proposed Ordinance provides:

1. For a finding that the structures located on the property located at 15905 Juneau Lane are substandard, a nuisance, and a health hazard;
2. That the owners of the property abate the substandard and dangerous structures.
3. For provisions should the owners of the property fail to repair, remove or demolish the substandard structures; and
4. For administrative procedures following passage of the Ordinance.

RECOMMENDED ACTION:

MOTION: To approve Ordinance No. 2021-35, finding that the structures on or about the property located at 15905 Juneau Lane, Jersey Village, Texas, 77040 (the "property") to be substandard and a public nuisance; ordering the owner of the property to abate the substandard structures and public nuisance on the property; authorizing the City of Jersey Village, Texas to demolish the structures on the property if the owner of the property fails to abate the substandard structures and public nuisance on the property; authorizing the City of Jersey Village, Texas to assess a lien against the property for the costs of the demolition; and, making other findings and provisions related thereto.

REGULAR SESSION CITY COUNCIL MEETING PACKET FOR THE MEETING TO BE HELD ON SEPTEMBER 20, 2021

REGULAR SESSION CITY COUNCIL MEETING PACKET FOR THE MEETING TO BE HELD ON SEPTEMBER 20, 2021

ORDINANCE NO. 2021-35

AN ORDINANCE OF THE CITY COUNCIL OF THE CITY OF JERSEY VILLAGE, TEXAS, FINDING THAT THE STRUCTURES ON OR ABOUT THE PROPERTY LOCATED AT 15905 JUNEAU LANE, JERSEY VILLAGE, TEXAS, 77040 (THE "PROPERTY") TO BE SUBSTANDARD AND A PUBLIC NUISANCE; ORDERING THE OWNER OF THE PROPERTY TO ABATE THE SUBSTANDARD STRUCTURES AND PUBLIC NUISANCE ON THE PROPERTY; AUTHORIZING THE CITY OF JERSEY VILLAGE, TEXAS TO DEMOLISH THE STRUCTURES ON THE PROPERTY IF THE OWNER OF THE PROPERTY FAILS TO ABATE THE SUBSTANDARD STRUCTURES AND PUBLIC NUISANCE ON THE PROPERTY; AUTHORIZING THE CITY OF JERSEY VILLAGE, TEXAS TO ASSESS A LIEN AGAINST THE PROPERTY FOR THE COSTS OF THE DEMOLITION; AND, MAKING OTHER FINDINGS AND PROVISIONS RELATED THERETO.

WHEREAS, the Building Official of the City of Jersey Village, Texas (the "City") produced a report (the "Report") providing that the buildings and structures on or about the property located at 15905 Juneau Lane, Jersey Village, Texas, 77040 (the "Property"), are substandard and a public nuisance, with the Report being attached to this Ordinance as "Exhibit A"; and

WHEREAS, the City provided written notice by certified mail to the owner of the Property (the "Owner") that the Property was substandard and a public nuisance, and that a public hearing would be held on September 20, 2021 at 7:00 PM CST in the City Council Chambers of the City of Jersey Village City Hall (the "Public Hearing"); and

WHEREAS, in accordance with Chapter 34 of the Code of Ordinances of the City (the "Code"), the City Council of the City (the "Council") conducted the Public Hearing so that the Owner or the Owner's representatives may appear and show cause as to: 1) why such buildings or structures should not be declared to be substandard; and, 2) why the Owner should not be ordered to repair, vacate, or demolish the buildings or structures on the Property; and

WHEREAS, the Council finds that all proper notices of the Public Hearing were sent consistent with the Code to the persons asserting or likely to have an ownership in the Property; and

WHEREAS, based upon the evidence presented, the Council finds that the Property and the structures on the Property are substandard; and

WHEREAS, the Council finds that the conditions of the structures on the Property constitute a nuisance and are a hazard to the health, safety, and welfare of the citizens of the City and are likely to endanger persons and property; and

WHEREAS, the Council finds that the Property is in violation of the Code; and **NOW THEREFORE,**

BE IT ORDAINED BY THE CITY COUNCIL OF THE CITY OF JERSEY VILLAGE:

SECTION 1. THAT the above-referenced recitals are incorporated herein as if set forth in full for all purposes.

SECTION 2. THAT the Council hereby finds, permits, and orders that the Owner, including any lienholder or mortgagee of the Property, shall, by itself or through the action of an agent, satisfy the requirements listed in "Exhibit B" regarding the Property (the "Abatement Requirements"). The Abatement Requirements shall be fully satisfied by a date thirty (30) days from the effective date of this Ordinance.

SECTION 3. THAT if the Owner, including any lienholders or mortgagee of the Property, shall fail to satisfy the Abatement Requirements, then the City may demolish the structures on the Property, including cleaning and grading the Property, and place a lien on the Property for the expenses incurred by the City for such work in accordance with the Code and State law.

SECTION 4. THAT if the Owner violates the terms of this Ordinance, then the City may seek administrative penalties not to exceed one thousand dollars ($1,000) per day.

SECTION 5. THAT the City Secretary shall file a copy of this Ordinance with the City and shall publish the caption of this Ordinance in accordance with the City's Charter.

SECTION 6. THAT in the event any clause phrase, provision, sentence, or part of this Ordinance, or the application of the same, to any person or circumstances, shall, for any reason, be adjudged invalid or held unconstitutional by a court of competent jurisdiction, it shall not affect, impair, or invalidate this Ordinance as a whole, or any part or provision hereof, other than the part declared to be invalid or unconstitutional; and, the Council hereby declares that it would have passed each and every part of the same notwithstanding the omission of any such part thus declared to be invalid or unconstitutional, whether there be one or more parts.

SECTION 7. THAT all other ordinances, or parts inconsistent or in conflict herewith, are, to the extent of such inconsistency or conflict, hereby repealed.

SECTION 8. THAT this Ordinance shall be in full force and effect from and after its passage.

PASSED AND APPROVED this 20th day of September 2021.

_____
Bobby Warren, Mayor

ATTEST:

_____
Lorri Coody, City Secretary

CITY OF JERSEY VILLAGE TEXAS A TEXAS STAR COMMUNITY

REGULAR SESSION CITY COUNCIL MEETING PACKET FOR THE MEETING TO BE HELD ON SEPTEMBER 20, 2021

EXHIBIT A

BUILDING OFFIAL'S REPORT OF THE PROPERTY LOCATED AT:
15905 JUNEAU LANE, JERSEY VILLAGE, TEXAS, 77040

REGULAR SESSION CITY COUNCIL MEETING PACKET FOR THE MEETING TO BE HELD ON SEPTEMBER 20, 2021

Inspection Report 15905 Juneau Lane



Exhibit A

Prepared by BBG Consulting

SESSION CITY COUNCIL MEETING PACKET FOR THE MEETING TO BE HELD ON SEPTEMBI

- **Article VI – Substandard Structures**

- Any building or structure which has any of the following defects shall be deemed a substandard building or structure and constitute a hazard to the health, safety, and welfare of the citizens:

Substandard Building as defined by Section 34-250 City of Manvel Code of Ordinances

SESSION CITY COUNCIL MEETING PACKET FOR THE MEETING TO BE HELD ON SEPTEMBE

1. Any building or structure that has become deteriorated or damaged through exposure to the elements including, without limitation, flood, wind, hail or rain, or damage through fire or by any other cause, to the extent that either the roof, windows or doors, or portions of the house, building or structure which protect from the weather will no longer reasonably protect from the weather.

2. Any building or structure which is so structurally deteriorated or damaged that it is in danger of collapse or which cannot be expected to withstand the reasonably anticipated storms or hurricanes.

3. Any building used for the occupancy of one or more persons which is not connected to an approved public sanitary sewer or does not provide connection to a properly installed and approved septic system.

4. Any building or structure not constructed or maintained in conformity with the fire code of the city when such nonconformity constitutes a serious hazard to the safety of persons or property.

5. Any building or structure not wired in conformity with the electrical code of the city when such nonconformity constitutes a serious hazard to the safety of persons or property.

6. Any building or structure not constructed in conformity with the plumbing code of the city when such nonconformity constitutes a serious hazard to the safety of persons or property.

SESSION CITY COUNCIL MEETING PACKET FOR THE MEETING TO BE HELD ON SEPTEMBI

7. Any building or structure not constructed in conformity with the building code of the city when such nonconformity constitutes a serious hazard to the safety of persons or property.

8. Any building or structure or any portion thereof has settled to such an extent that the walls or other structural portions have materially less resistance to winds or earthquakes than is required in the case of new construction.

9. Any building or structure by reason of obsolescence, dilapidated condition, deterioration, damage, electrical wiring, gas connections, heating apparatus or other causes, is in such condition to be a fire hazard and is so situated as to endanger life or other buildings or property in the vicinity or provide a ready fuel supply to augment the spread and intensity of fire arising from any cause.

10. Any building or structure so constructed or maintained as to constitute a menace to health or safety, including:

11. All conditions conducive to the harboring of rats, snakes, mice, other disease carrying animals or insects reasonably calculated to spread disease.

12. Conditions hazardous to the safety of persons or property, such as inadequate bracing, structural support, construction or the presence of deteriorated materials.

13. Conditions constituting an attractive nuisance creating a hazard to the health or safety of minors.

SESSION CITY COUNCIL MEETING PACKET FOR THE MEETING TO BE HELD ON SEPTEMBI

- On August 9, 2021, an inspection of the property located at 15905 Juneau Lane, Jersey Village, TX was performed.
- The inspection was conducted according to Section 54 of the Texas Local Government Code and the City of Jersey Village Ordinance.
- The Property appears to be abandoned, in disrepair, and in violation of several provisions of the City's Code of Ordinances.
- The following pages outline the violations in question.



SESSION CITY COUNCIL MEETING PACKET FOR THE MEETING TO BE HELD ON SEPTEMB



15905 Juneau Drive – Jersey Village – 8/9/2021

(1) Inadequate sanitation, including, but not limited to:

- General dilapidation or improper maintenance.

SESSION CITY COUNCIL MEETING PACKET FOR THE MEETING TO BE HELD ON SEPTEMBE



15905 Juneau Drive – Jersey Village – 8/9/2021

(1) Inadequate sanitation, including, but not limited to:

- General dilapidation or improper maintenance.

SESSION CITY COUNCIL MEETING PACKET FOR THE MEETING TO BE HELD ON SEPTEMBE



15905 Juneau Drive – Jersey Village – 8/9/2021

(2) Structural hazards, including, but not limited to:

- Observed deteriorated or inadequate foundation.
- Observed Members of ceilings, roofs, ceiling and roof support or other horizontal members which sag, split or buckle due to defective material or deterioration.

SESSION CITY COUNCIL MEETING PACKET FOR THE MEETING TO BE HELD ON SEPTEMBE



15905 Juneau Drive – Jersey Village – 8/9/2021

(2) Structural hazards, including, but not limited to:

- Observed deteriorated or inadequate foundation.
- Observed Members of ceilings, roofs, ceiling and roof support or other horizontal members which sag, split or buckle due to defective material or deterioration.

SESSION CITY COUNCIL MEETING PACKET FOR THE MEETING TO BE HELD ON SEPTEMBE



15905 Juneau Drive – Jersey Village – 8/9/2021

(3) Observed faulty weather protection, including, but not limited to:

- Deteriorated, crumbling, or loose plaster.
- Deteriorated or ineffective waterproofing of exterior walls, roof, or foundation.
- Lack or defective weather protection of exterior wall coverings, including lack of paint or weathering due to lack of paint or other approved protective covering.
- Broken, rotted, split, or buckled exterior wall coverings or roof coverings.

SESSION CITY COUNCIL MEETING PACKET FOR THE MEETING TO BE HELD ON SEPTEMBE



15905 Juneau Drive – Jersey Village – 8/9/2021

(3) Observed faulty weather protection, including, but not limited to:

- Deteriorated, crumbling, or loose plaster.
- Deteriorated or ineffective waterproofing of exterior walls, roof, or foundation.
- Lack or defective weather protection of exterior wall coverings, including lack of paint or weathering due to lack of paint or other approved protective covering.
- Broken, rotted, split, or buckled exterior wall coverings or roof coverings.

SESSION CITY COUNCIL MEETING PACKET FOR THE MEETING TO BE HELD ON SEPTEMBE

Sec. 34-281. - Maintenance of structures.

The exterior of every structure, including accessory structures and fences, shall be maintained in good repair. The same shall be maintained free of broken glass, loose shingles, crumbling or broken stone or brick, excessive peeling paint or other conditions reflective of deterioration or inadequate maintenance to the end that the structure itself may be preserved, safety and fire hazards may be eliminated and adjoining properties may be protected from blighting influences.

SESSION CITY COUNCIL MEETING PACKET FOR THE MEETING TO BE HELD ON SEPTEMBI

Sec. 34-251. ACTION FOR REPAIR OR DEMOLITION OF STRUCTURE.

All substandard buildings or structures within the provisions of this article which shall constitute a hazard to the health, safety or general welfare of its occupants, the citizens of the city or to the public are declared to be public nuisances and shall be ordered to be repaired, vacated or demolished as provided in this article.

SESSION CITY COUNCIL MEETING PACKET FOR THE MEETING TO BE HELD ON SEPTEMBI

Sec. 34-254. - Standards for orders.

The following standards may be followed by the city council in ordering the repair, vacation or demolition of a substandard building or structure:

1. If the substandard building or structure can reasonably be repaired so that it will no longer be in a condition which is in violation of the provisions of this article, it shall be ordered repaired.

2. If the substandard building or structure is in such condition as to make it dangerous to the health, morals, safety or general welfare of its occupants, the citizens of the city or to the public, it shall be ordered to be vacated.

3. In any case where a substandard building or structure cannot reasonably be repaired so that its existence will no longer be in violation of the provisions of this article, it shall be demolished.

SESSION CITY COUNCIL MEETING PACKET FOR THE MEETING TO BE HELD ON SEPTEMBI

EXHIBIT B

CITY COUNCIL REQUIREMENTS FOR ABATEMENT OF SUBSTANDARD STRUCTURES AND NUISANCES LOCATED AT:
15905 JUNEAU LANE, JERSEY VILLAGE, TEXAS, 77040

TBD on September 20, 2021

REGULAR SESSION CITY COUNCIL MEETING PACKET FOR THE MEETING TO BE HELD ON SEPTEMBER 20, 2021

Fund Balance Report

Jersey Village, TX

As Of 08/31/2021

Fund	Beginning Balance	Total Revenues	Total Expenses	Ending Balance
01 - GENERAL FUND	696,365.29	16,869,163.60	12,319,663.98	5,245,864.91
02 - UTILITY FUND	11,944,331.84	4,156,770.98	4,025,199.37	12,075,903.45
03 - DEBT SERVICE FUND	328,686.95	1,535,308.26	1,391,475.00	472,520.21
04 - IMPACT FEE FUND	431,432.96	60,168.28	0.00	491,601.24
05 - MOTEL TAX FUND	87,923.49	52,163.27	34,450.00	105,636.76
06 - ASSET FORFEITURE FUND	18,237.45	5,491.61	8,688.10	15,040.96
07 - CAPITAL REPLACEMENT	8,531,787.08	1,529,305.98	1,018,989.93	9,042,103.13
10 - CAPITAL IMPROVEMENTS FUND	9,844,049.34	3,227.49	2,001,103.42	7,846,173.41
11 - GOLF COURSE FUND	-4,584,626.75	1,717,174.61	1,752,396.02	-4,619,848.16
12 - COURT RESTRICTED FEE FUND	63,859.34	0.00	64,153.23	-293.89
13 - CDBG - GRANT	-8,349.58	1,349,399.15	3,474,276.21	-2,133,226.64
14 - TIRZ - 2	0.00	0.00	0.00	0.00
15 - TIRZ -3	0.00	0.00	0.00	0.00
50 - JV CRIME CONTROL	4,419,076.00	1,815,900.77	1,849,342.45	4,385,634.32
Report Total:	**31,772,773.41**	**29,094,074.00**	**27,939,737.71**	**32,927,109.70**

REGULAR SESSION CITY COUNCIL MEETING PACKET FOR THE MEETING TO BE HELD ON SEPTEMBER 20, 2021



Jersey Village, TX

Income Statement

Account Summary

For Fiscal: 2020-2021 Period Ending: 08/31/2021

		Original Total Budget	Current Total Budget	MTD Activity	YTD Activity	Budget Remaining
Fund: 02 - UTILITY FUND						
Department: 40 - REVENUES						
Category: 85 - FEE & CHARGES FOR SERVICE						
02-40-8541	WATER SERVICE	3,090,000.00	3,090,000.00	286,117.34	2,551,269.50	538,730.50
02-40-8542	SEWER SERVICE	1,545,000.00	1,545,000.00	141,327.07	1,489,526.73	55,473.27
	Category: 85 - FEE & CHARGES FOR SERVICE Total:	**4,635,000.00**	**4,635,000.00**	**427,444.41**	**4,040,796.23**	**594,203.77**
Category: 96 - INTEREST EARNED						
02-40-9601	INTEREST EARNED	10,000.00	10,000.00	57.16	1,632.30	8,367.70
02-40-9602	INTEREST EARNED	0.00	0.00	0.00	160.72	-160.72
	Category: 96 - INTEREST EARNED Total:	**10,000.00**	**10,000.00**	**57.16**	**1,793.02**	**8,206.98**
Category: 98 - MISCELLANEOUS REVENUE						
02-40-9802	SALE OF ASSETS	67,500.00	67,500.00	0.00	88,420.00	-20,920.00
02-40-9840	PENALTIES & ADJUSTMENTS	30,000.00	30,000.00	4,123.52	13,792.13	16,207.87
02-40-9899	MISCELLANEOUS	30,000.00	30,000.00	1,285.65	11,969.60	18,030.40
	Category: 98 - MISCELLANEOUS REVENUE Total:	**127,500.00**	**127,500.00**	**5,409.17**	**114,181.73**	**13,318.27**
	Department: 40 - REVENUES Total:	**4,772,500.00**	**4,772,500.00**	**432,910.74**	**4,156,770.98**	**615,729.02**

REGULAR SESSION CITY COUNCIL MEETING PACKET FOR THE MEETING TO BE HELD ON SEPTEMBER 20, 2021

		Original Total Budget	Current Total Budget	MTD Activity	YTD Activity	Budget Remaining
Department: 45 - WATER & SEWER						
Category: 30 - SALARIES, WAGES, & BENEFITS						
02-45-3001	SALARIES	241,054.46	241,054.46	17,782.20	186,449.47	54,604.99
02-45-3003	LONGEVITY	288.08	288.08	33.22	340.98	-52.90
02-45-3007	OVERTIME	30,000.00	30,000.00	2,352.90	41,607.92	-11,607.92
02-45-3010	INCENTIVES	1,139.84	1,139.84	55.38	631.06	508.78
02-45-3051	FICA/MEDICARE TAXES	19,425.82	19,425.82	1,468.61	16,642.41	2,783.41
02-45-3052	WORKMEN'S CONPENSATION	5,183.00	5,183.00	0.00	3,886.38	1,296.62
02-45-3053	EMPLOYMENT TAXES	864.00	864.00	3.62	2,416.98	-1,552.98
02-45-3054	RETIREMENT	38,256.52	38,256.52	2,825.25	32,125.01	6,131.51
02-45-3055	HEALTH INSURANCE	88,890.36	88,890.36	5,161.14	56,863.10	32,027.26
02-45-3056	LIFE INS	352.30	352.30	29.25	310.05	42.25
02-45-3057	DENTAL	5,092.10	5,092.10	337.20	3,720.80	1,371.30
02-45-3058	LONG-TERM DISABILITY	1,012.44	1,012.44	74.69	783.13	229.31
	Category: 30 - SALARIES, WAGES, & BENEFITS Total:	**431,558.92**	**431,558.92**	**30,123.46**	**345,777.29**	**85,781.63**
Category: 35 - SUPPLIES						
02-45-3502	POSTAGE/FREIGHT/DEL. FEE	11,000.00	11,000.00	864.32	14,138.71	-3,138.71
02-45-3503	OFFICE SUPPLIES	2,000.00	2,000.00	0.00	2,406.13	-406.13
02-45-3504	WEARING APPAREL	2,000.00	2,000.00	57.00	2,236.29	-236.29
02-45-3506	CHEMICALS	20,000.00	20,000.00	2,315.08	23,182.03	-3,182.03
02-45-3510	BOOKS & PERIODICALS	600.00	600.00	0.00	0.00	600.00
02-45-3523	TOOLS/EQUIPMENT	4,000.00	4,000.00	0.00	219.11	3,780.89
02-45-3534	PARTS AND MATERIALS	1,200.00	1,200.00	0.00	3,363.50	-2,163.50
02-45-3535	SHOP SUPPLIES	1,400.00	1,400.00	0.00	1,457.11	-57.11
	Category: 35 - SUPPLIES Total:	**42,200.00**	**42,200.00**	**3,236.40**	**47,002.88**	**-4,802.88**
Category: 40 - MAINTENANCE--BLDGS, STRUC						
02-45-4001	BUILDINGS AND GROUNDS	3,000.00	3,000.00	0.00	0.00	3,000.00
02-45-4041	WATER SYSTEM MAINTENANCE	30,000.00	30,000.00	33,926.38	156,490.67	-126,490.67
02-45-4042	SEWER SYSTEM MAINTENANCE	12,500.00	12,500.00	5,450.00	126,650.43	-114,150.43
02-45-4043	WATER PLANTS MAINTENANCE	18,000.00	18,000.00	3,018.61	48,633.47	-30,633.47
02-45-4044	LIFT STATIONS MAINTENANCE	36,000.00	36,000.00	1,195.61	38,335.30	-2,335.30
02-45-4045	SEWER PLANT MAINTENANCE	45,000.00	45,000.00	5,079.87	84,023.48	-39,023.48
	Category: 40 - MAINTENANCE--BLDGS, STRUC Total:	**144,500.00**	**144,500.00**	**48,670.47**	**454,133.35**	**-309,633.35**
Category: 45 - MAINTENANCE						
02-45-4504	COMPUTER SOFTWARE	7,400.00	7,400.00	142.00	6,221.01	1,178.99
	Category: 45 - MAINTENANCE Total:	**7,400.00**	**7,400.00**	**142.00**	**6,221.01**	**1,178.99**
Category: 50 - SERVICES						
02-45-5012	PRINTING	1,800.00	1,800.00	0.00	1,467.28	332.72
02-45-5015	LAB TESTS	25,000.00	25,000.00	2,216.00	25,321.43	-321.43
02-45-5017	UTILITIES	140,000.00	140,000.00	14,554.00	138,973.57	1,026.43
02-45-5019	W.O.B. DISPOSAL-O&M CONTR	350,000.00	350,000.00	27,590.87	287,153.16	62,846.84
02-45-5020	COMMUNICATIONS	7,000.00	7,000.00	0.00	4,223.79	2,776.21
02-45-5022	RENTAL OF EQUIPMENT	1,460.00	1,460.00	0.00	0.00	1,460.00
02-45-5025	PUBLIC NOTICES	800.00	800.00	0.00	0.00	800.00
02-45-5027	MEMBERSHIPS	1,000.00	1,000.00	0.00	40.00	960.00
02-45-5029	TRAVEL/TRAINING	13,000.00	13,000.00	0.00	7,566.56	5,433.44
	Category: 50 - SERVICES Total:	**540,060.00**	**540,060.00**	**44,360.87**	**464,745.79**	**75,314.21**
Category: 54 - SUNDRY						
02-45-5405	PERMITS, FEES, CREDIT CD FEES	30,000.00	30,000.00	2,834.76	50,025.44	-20,025.44
02-45-5411	WATER-PURCHASED	1,678,900.00	1,678,900.00	0.00	872,446.84	806,453.16
02-45-5412	WATER AUTHORITY FEES	40,000.00	40,000.00	0.00	131,849.85	-91,849.85
	Category: 54 - SUNDRY Total:	**1,748,900.00**	**1,748,900.00**	**2,834.76**	**1,054,322.13**	**694,577.87**
Category: 55 - PROFESSIONAL SERVICES						
02-45-5501	AUDITS/CONTRACTS/STUDIES	10,000.00	10,000.00	0.00	10,000.00	0.00
02-45-5510	ENGINEERING SERVICES	150,000.00	150,000.00	0.00	3,265.00	146,735.00
02-45-5515	CONSULTANT SERVICES	50,000.00	50,000.00	0.00	12,367.60	37,632.40
	Category: 55 - PROFESSIONAL SERVICES Total:	**210,000.00**	**210,000.00**	**0.00**	**25,632.60**	**184,367.40**

REGULAR SESSION CITY COUNCIL MEETING PACKET FOR THE MEETING TO BE HELD ON SEPTEMBER 20, 2021

		Original Total Budget	Current Total Budget	MTD Activity	YTD Activity	Budget Remaining
Category: 60 - OTHER SERVICES						
02-45-6001	INSURANCE-VEHICLES	11,500.00	11,500.00	0.00	13,183.94	-1,683.94
02-45-6003	LIABILITY-FIRE & CASUALTY	10,000.00	10,000.00	0.00	7,910.74	2,089.26
	Category: 60 - OTHER SERVICES Total:	**21,500.00**	**21,500.00**	**0.00**	**21,094.68**	**405.32**
Category: 97 - INTERFUND ACTIVITY						
02-45-9751	TRANSFER TO GENERAL FUND	590,000.00	590,000.00	0.00	0.00	590,000.00
02-45-9753	TRANSFER TO DEBT SERVICE FUND	88,418.00	88,418.00	88,418.00	88,418.00	0.00
02-45-9772	TECHNOLOGY USER FEE	875.00	875.00	875.00	875.00	0.00
02-45-9781	EQUIPMENT PURCHASE CONTRIBUTIO	83,120.00	83,120.00	83,120.00	83,120.00	0.00
02-45-9791	EQUIPMENT USER FEE	37,000.00	37,000.00	627,000.00	627,000.00	-590,000.00
	Category: 97 - INTERFUND ACTIVITY Total:	**799,413.00**	**799,413.00**	**799,413.00**	**799,413.00**	**0.00**
	Department: 45 - WATER & SEWER Total:	**3,945,531.92**	**3,945,531.92**	**928,780.96**	**3,218,342.73**	**727,189.19**

REGULAR SESSION CITY COUNCIL MEETING PACKET FOR THE MEETING TO BE HELD ON SEPTEMBER 20, 2021

		Original Total Budget	Current Total Budget	MTD Activity	YTD Activity	Budget Remaining
Department: 46 - UTILITY CAPITAL PROJECT						
Category: 70 - CAPITAL IMPROVEMENTS						
02-46-7060	WEST WATER PLANT - POWER PANEL RETROF...	200,000.00	200,000.00	0.00	3,844.64	196,155.36
02-46-7080	AUTOCNTRL-SCADA	50,000.00	50,000.00	0.00	29,800.00	20,200.00
02-46-7091	WHITEOAK BAYOU REHABILITATION	650,000.00	650,000.00	0.00	767,298.00	-117,298.00
02-46-7111	SEATTLE - WELL REPAIR	50,000.00	50,000.00	0.00	4,000.00	46,000.00
02-46-7129	CONGO ELEVATED STORAGE TANK - REHAB	500,000.00	500,000.00	0.00	1,914.00	498,086.00
	Category: 70 - CAPITAL IMPROVEMENTS Total:	**1,450,000.00**	**1,450,000.00**	**0.00**	**806,856.64**	**643,143.36**
	Department: 46 - UTILITY CAPITAL PROJECT Total:	**1,450,000.00**	**1,450,000.00**	**0.00**	**806,856.64**	**643,143.36**
	Fund: 02 - UTILITY FUND Surplus (Deficit):	**-623,031.92**	**-623,031.92**	**-495,870.22**	**131,571.61**	

REGULAR SESSION CITY COUNCIL MEETING PACKET FOR THE MEETING TO BE HELD ON SEPTEMBER 20, 2021

		Original Total Budget	Current Total Budget	MTD Activity	YTD Activity	Budget Remaining
Fund: 04 - IMPACT FEE FUND						
Department: 43 - 43						
Category: 85 - FEE & CHARGES FOR SERVICE						
04-43-8547	WATER DISTRIBUTION	50,000.00	50,000.00	0.00	49,706.02	293.98
04-43-8548	SEWER PLANT CAPACITY	25,000.00	25,000.00	0.00	9,986.00	15,014.00
	Category: 85 - FEE & CHARGES FOR SERVICE Total:	**75,000.00**	**75,000.00**	**0.00**	**59,692.02**	**15,307.98**
Category: 96 - INTEREST EARNED						
04-43-9601	INTEREST EARNED	3,000.00	3,000.00	18.97	476.26	2,523.74
	Category: 96 - INTEREST EARNED Total:	**3,000.00**	**3,000.00**	**18.97**	**476.26**	**2,523.74**
	Department: 43 - 43 Total:	**78,000.00**	**78,000.00**	**18.97**	**60,168.28**	**17,831.72**
	Fund: 04 - IMPACT FEE FUND Total:	**78,000.00**	**78,000.00**	**18.97**	**60,168.28**	

REGULAR SESSION CITY COUNCIL MEETING PACKET FOR THE MEETING TO BE HELD ON SEPTEMBER 20, 2021

		Original Total Budget	Current Total Budget	MTD Activity	YTD Activity	Budget Remaining
Fund: 11 - GOLF COURSE FUND						
Department: 80 - 80						
Category: 85 - FEE & CHARGES FOR SERVICE						
11-80-8551	GREEN FEES	1,100,000.00	1,100,000.00	80,350.19	1,092,774.70	7,225.30
11-80-8553	RANGE FEES/CLUB RENTALS	108,000.00	108,000.00	11,890.88	162,572.87	-54,572.87
11-80-8554	CLUB RENTALS	5,800.00	5,800.00	605.00	5,161.75	638.25
11-80-8555	TOURNAMENT GREENS FEES	110,000.00	110,000.00	8,253.60	106,714.91	3,285.09
11-80-8560	MISCELLANEOUS FEES	19,000.00	19,000.00	930.51	24,273.46	-5,273.46
11-80-8567	MERCHANDISE	140,000.00	140,000.00	14,697.97	174,538.54	-34,538.54
11-80-8568	SPECIAL ORDER MERCHANDISE	40,000.00	40,000.00	4,204.64	34,335.79	5,664.21
11-80-8572	CONCESSION FEES	45,000.00	45,000.00	3,740.46	49,188.83	-4,188.83
11-80-8575	MEMBERSHIPS	42,000.00	42,000.00	3,180.76	41,514.29	485.71
11-80-8579	CASH OVER/UNDER	0.00	0.00	-11.83	277.94	-277.94
	Category: 85 - FEE & CHARGES FOR SERVICE Total:	**1,609,800.00**	**1,609,800.00**	**127,842.18**	**1,691,353.08**	**-81,553.08**
Category: 96 - INTEREST EARNED						
11-80-9601	INTEREST EARNED	1,000.00	1,000.00	4.93	61.28	938.72
	Category: 96 - INTEREST EARNED Total:	**1,000.00**	**1,000.00**	**4.93**	**61.28**	**938.72**
Category: 97 - INTERFUND ACTIVITY						
11-80-9751	TRANSFER FROM GENERAL FUND	345,891.14	345,891.14	0.00	0.00	345,891.14
	Category: 97 - INTERFUND ACTIVITY Total:	**345,891.14**	**345,891.14**	**0.00**	**0.00**	**345,891.14**
Category: 98 - MISCELLANEOUS REVENUE						
11-80-9802	SALES OF FIXED ASSETS	25,000.00	25,000.00	0.00	25,760.25	-760.25
	Category: 98 - MISCELLANEOUS REVENUE Total:	**25,000.00**	**25,000.00**	**0.00**	**25,760.25**	**-760.25**
	Department: 80 - 80 Total:	**1,981,691.14**	**1,981,691.14**	**127,847.11**	**1,717,174.61**	**264,516.53**

REGULAR SESSION CITY COUNCIL MEETING PACKET FOR THE MEETING TO BE HELD ON SEPTEMBER 20, 2021

		Original Total Budget	Current Total Budget	MTD Activity	YTD Activity	Budget Remaining
Department: 81 - CLUB HOUSE						
Category: 30 - SALARIES, WAGES, & BENEFITS						
11-81-3001	SALARIES AND WAGES	248,340.39	248,340.39	18,939.49	214,247.49	34,092.90
11-81-3002	WAGES	114,940.00	114,940.00	13,042.00	126,727.86	-11,787.86
11-81-3003	LONGEVITY	911.82	911.82	88.62	964.83	-53.01
11-81-3007	OVERTIME	1,000.00	1,000.00	19.00	2,666.11	-1,666.11
11-81-3051	FICA/MEDICARE TAXES	27,137.68	27,137.68	2,409.92	25,864.42	1,273.26
11-81-3052	WORKMAN'S COMP	5,913.00	5,913.00	0.00	4,433.75	1,479.25
11-81-3053	UNEMPLOYMENT TAXES	880.00	880.00	371.06	7,484.58	-6,604.58
11-81-3054	RETIREMENT	35,135.42	35,135.42	2,660.36	30,578.52	4,556.90
11-81-3055	INSURANCE	56,976.14	56,976.14	3,324.22	37,934.40	19,041.74
11-81-3056	LIFE INS	352.30	352.30	29.25	321.75	30.55
11-81-3057	DENTAL INSURANCE	3,675.10	3,675.10	228.20	2,600.34	1,074.76
11-81-3058	LONG-TERM DISABILITY	1,043.03	1,043.03	79.55	899.70	143.33
	Category: 30 - SALARIES, WAGES, & BENEFITS Total:	**496,304.88**	**496,304.88**	**41,191.67**	**454,723.75**	**41,581.13**
Category: 34 - COST OF SALES						
11-81-3401	MERCHANDISE	120,000.00	120,000.00	22,381.58	145,134.31	-25,134.31
11-81-3415	RANGE BALLS	8,000.00	8,000.00	-876.35	10,049.68	-2,049.68
11-81-3416	RENTAL CLUBS	2,000.00	2,000.00	0.00	0.00	2,000.00
11-81-3419	SPECIAL ORDER MERCHANDISE	25,000.00	25,000.00	2,603.02	27,041.64	-2,041.64
	Category: 34 - COST OF SALES Total:	**155,000.00**	**155,000.00**	**24,108.25**	**182,225.63**	**-27,225.63**
Category: 35 - SUPPLIES						
11-81-3502	POSTAGE/FREIGHT/DEL.FEE	400.00	400.00	0.00	101.04	298.96
11-81-3503	OFFICE SUPPLIES	6,000.00	6,000.00	0.00	3,985.98	2,014.02
11-81-3504	WEARING APPAREL	2,000.00	2,000.00	129.39	931.67	1,068.33
11-81-3510	BOOKS & PERIODICALS	500.00	500.00	0.00	0.00	500.00
11-81-3523	TOOLS/EQUIPMENT	1,000.00	1,000.00	0.00	666.26	333.74
11-81-3529	REPAIR PARTS	250.00	250.00	0.00	0.00	250.00
11-81-3605	MISCELLANEOUS SERVICE FEES	7,000.00	7,000.00	0.00	4,659.00	2,341.00
	Category: 35 - SUPPLIES Total:	**17,150.00**	**17,150.00**	**129.39**	**10,343.95**	**6,806.05**
Category: 45 - MAINTENANCE						
11-81-4501	FURN, FIXTURE/EPT MAINTENANCE	750.00	750.00	0.00	1,121.31	-371.31
11-81-4504	COMPUTER SOFTWARE	750.00	750.00	0.00	0.00	750.00
11-81-4506	CART MAINTENANCE	1,000.00	1,000.00	0.00	1,619.52	-619.52
11-81-4520	EQUIPMENT MAINTENANCE/OUTSOURC	750.00	750.00	0.00	130.97	619.03
11-81-4599	MISCELLANEOUS EQUIPMENT	1,200.00	1,200.00	0.00	307.84	892.16
	Category: 45 - MAINTENANCE Total:	**4,450.00**	**4,450.00**	**0.00**	**3,179.64**	**1,270.36**
Category: 50 - SERVICES						
11-81-5012	PRINTING	3,500.00	3,500.00	0.00	3,139.40	360.60
11-81-5020	COMMUNICATIONS	6,500.00	6,500.00	0.00	5,528.61	971.39
11-81-5023	LEASE EQUIPMENT	1,600.00	1,600.00	0.00	12.30	1,587.70
11-81-5027	MEMBERSHIPS/SUBCRIPTIONS	1,000.00	1,000.00	0.00	419.00	581.00
11-81-5029	TRAVEL/TRAINING	2,000.00	2,000.00	0.00	470.00	1,530.00
11-81-5043	ADVERTISING/PROMOTION	27,000.00	27,000.00	679.50	20,822.01	6,177.99
	Category: 50 - SERVICES Total:	**41,600.00**	**41,600.00**	**679.50**	**30,391.32**	**11,208.68**
Category: 54 - SUNDRY						
11-81-5403	BANK COSTS	0.00	0.00	126.08	126.08	-126.08
11-81-5405	CREDIT CARD CHARGES	40,000.00	40,000.00	4,911.38	70,644.41	-30,644.41
11-81-5410	SECURITY	2,600.00	2,600.00	0.00	1,659.18	940.82
11-81-5413	TOURNAMENT FEES EXPENSE	1,800.00	1,800.00	0.00	774.00	1,026.00
11-81-5421	EQUIPMENT LEASE DEBT	3,000.00	3,000.00	0.00	675.00	2,325.00
11-81-5498	MISCELLANEOUS EXPENSE	4,000.00	4,000.00	0.00	3,687.93	312.07
	Category: 54 - SUNDRY Total:	**51,400.00**	**51,400.00**	**5,037.46**	**77,566.60**	**-26,166.60**
Category: 55 - PROFESSIONAL SERVICES						
11-81-5515	CONSULTANT FEES	3,500.00	3,500.00	555.00	555.00	2,945.00
	Category: 55 - PROFESSIONAL SERVICES Total:	**3,500.00**	**3,500.00**	**555.00**	**555.00**	**2,945.00**

REGULAR SESSION CITY COUNCIL MEETING PACKET FOR THE MEETING TO BE HELD ON SEPTEMBER 20, 2021

		Original Total Budget	Current Total Budget	MTD Activity	YTD Activity	Budget Remaining
Category: 60 - OTHER SERVICES						
11-81-6003	LIABILITY-FIRE & CASUALTY INSR	20,000.00	20,000.00	0.00	19,337.38	662.62
	Category: 60 - OTHER SERVICES Total:	**20,000.00**	**20,000.00**	**0.00**	**19,337.38**	**662.62**
Category: 97 - INTERFUND ACTIVITY						
11-81-9772	TECHNOLOGY USER FEE	4,000.00	4,000.00	4,000.00	4,000.00	0.00
11-81-9791	EQUIP USER FEE	67,025.00	67,025.00	67,025.00	67,025.00	0.00
	Category: 97 - INTERFUND ACTIVITY Total:	**71,025.00**	**71,025.00**	**71,025.00**	**71,025.00**	**0.00**
	Department: 81 - CLUB HOUSE Total:	**860,429.88**	**860,429.88**	**142,726.27**	**849,348.27**	**11,081.61**

REGULAR SESSION CITY COUNCIL MEETING PACKET FOR THE MEETING TO BE HELD ON SEPTEMBER 20, 2021

		Original Total Budget	Current Total Budget	MTD Activity	YTD Activity	Budget Remaining
Department: 82 - COURSE MAINTENANCE						
Category: 30 - SALARIES, WAGES, & BENEFITS						
11-82-3001	SALARIES AND	334,375.41	327,975.41	23,289.03	259,810.10	68,165.31
11-82-3002	WAGES	29,450.00	29,450.00	2,616.00	13,629.66	15,820.34
11-82-3003	LONGEVITY	3,024.32	3,024.32	214.15	2,515.83	508.49
11-82-3007	OVERTIME	5,000.00	5,000.00	471.81	6,185.43	-1,185.43
11-82-3051	FICA/MEDICARE TAXES	26,541.61	26,541.61	1,917.73	20,065.54	6,476.07
11-82-3052	WORKMAN'S COMP	6,947.00	6,947.00	0.00	5,209.08	1,737.92
11-82-3053	UNEMPLOYMENT TAXES	1,376.00	1,376.00	150.14	3,631.88	-2,255.88
11-82-3054	RETIREMENT	48,072.92	48,072.92	3,349.30	37,694.60	10,378.32
11-82-3055	INSURANCE	110,608.16	110,608.16	7,405.13	94,151.47	16,456.69
11-82-3056	LIFE INS	563.68	563.68	40.95	473.85	89.83
11-82-3057	DENTAL	6,703.84	6,703.84	466.44	5,826.93	876.91
11-82-3058	LONG-TERM DISABILITY	1,404.37	1,404.37	97.81	1,091.26	313.11
	Category: 30 - SALARIES, WAGES, & BENEFITS Total:	**574,067.31**	**567,667.31**	**40,018.49**	**450,285.63**	**117,381.68**
Category: 35 - SUPPLIES						
11-82-3503	OFFICE SUPPLIES	500.00	500.00	0.00	0.00	500.00
11-82-3504	WEARING APPAREL	2,700.00	2,700.00	0.00	1,132.87	1,567.13
11-82-3506	CHEMICALS	6,000.00	6,000.00	0.00	2,678.43	3,321.57
11-82-3514	FUEL & OIL	17,000.00	17,000.00	0.00	10,566.92	6,433.08
11-82-3520	FOOD/WATER	750.00	750.00	0.00	0.00	750.00
11-82-3523	TOOLS/EQUIPMENT	4,500.00	4,500.00	0.00	3,535.07	964.93
11-82-3526	MINOR EQUIPMENT	3,500.00	3,500.00	0.00	1,182.98	2,317.02
11-82-3527	AGGREGATES	5,000.00	5,000.00	0.00	13,575.23	-8,575.23
11-82-3529	REPAIR PARTS	0.00	0.00	0.00	250.00	-250.00
11-82-3530	PESTICIDES	10,000.00	10,000.00	1,573.90	29,948.40	-19,948.40
11-82-3533	FERTILIZERS	28,000.00	28,000.00	0.00	21,093.50	6,906.50
11-82-3535	GROUND/SHOP SUPPLIES	5,000.00	5,000.00	0.00	2,340.29	2,659.71
11-82-3536	LANDSCAPING MATERIALS	5,000.00	5,000.00	0.00	20,103.16	-15,103.16
11-82-3538	COURSE SUPPLIES	5,000.00	5,000.00	0.00	373.46	4,626.54
11-82-3539	GOLF COURSE ACCESSORIES	5,000.00	5,000.00	0.00	1,842.04	3,157.96
11-82-3542	FIRST AID	750.00	750.00	0.00	304.57	445.43
	Category: 35 - SUPPLIES Total:	**98,700.00**	**98,700.00**	**1,573.90**	**108,926.92**	**-10,226.92**
Category: 40 - MAINTENANCE--BLDGS, STRUC						
11-82-4041	WATER WELL MAINTENANCE	3,000.00	3,000.00	0.00	0.00	3,000.00
11-82-4046	PARKING LOT MAINTENANCE	2,000.00	2,000.00	0.00	0.00	2,000.00
	Category: 40 - MAINTENANCE--BLDGS, STRUC Total:	**5,000.00**	**5,000.00**	**0.00**	**0.00**	**5,000.00**
Category: 45 - MAINTENANCE						
11-82-4505	IRRIGATION EQUIPMENT	17,000.00	17,000.00	47.69	11,829.80	5,170.20
11-82-4599	MISCELLANEOUS EQUIPMENT	2,000.00	2,000.00	0.00	3,854.97	-1,854.97
	Category: 45 - MAINTENANCE Total:	**19,000.00**	**19,000.00**	**47.69**	**15,684.77**	**3,315.23**
Category: 50 - SERVICES						
11-82-5022	RENTAL EQUIPMENT	4,500.00	4,500.00	0.00	2,064.00	2,436.00
11-82-5027	MEMBERSHIPS/SUBSCRIPTIONS	1,000.00	1,000.00	0.00	476.94	523.06
11-82-5029	TRAVEL/TRAINING	2,500.00	2,500.00	0.00	1,211.21	1,288.79
	Category: 50 - SERVICES Total:	**8,000.00**	**8,000.00**	**0.00**	**3,752.15**	**4,247.85**
Category: 54 - SUNDRY						
11-82-5405	PERMITS & FEES	500.00	500.00	0.00	0.00	500.00
11-82-5412	WATER AUTHORITY FEES	90,000.00	90,000.00	0.00	23,194.15	66,805.85
	Category: 54 - SUNDRY Total:	**90,500.00**	**90,500.00**	**0.00**	**23,194.15**	**67,305.85**
Category: 55 - PROFESSIONAL SERVICES						
11-82-5508	SANITARY/TRASH SERVICES	3,000.00	3,000.00	0.00	964.99	2,035.01
11-82-5515	CONSULTANT SERVICES	0.00	6,400.00	1,524.25	1,524.25	4,875.75
11-82-5530	PROFESSIONAL SERVICES	1,000.00	1,000.00	0.00	0.00	1,000.00
	Category: 55 - PROFESSIONAL SERVICES Total:	**4,000.00**	**10,400.00**	**1,524.25**	**2,489.24**	**7,910.76**
Category: 97 - INTERFUND ACTIVITY						
11-82-9773	COMP. EQUIPMENT USER FEE	375.00	375.00	375.00	375.00	0.00

REGULAR SESSION CITY COUNCIL MEETING PACKET FOR THE MEETING TO BE HELD ON SEPTEMBER 20, 2021

		Original Total Budget	Current Total Budget	MTD Activity	YTD Activity	Budget Remaining
11-82-9791	EQUIPMENT USER FEE	93,579.00	93,579.00	93,579.00	93,579.00	0.00
	Category: 97 - INTERFUND ACTIVITY Total:	**93,954.00**	**93,954.00**	**93,954.00**	**93,954.00**	**0.00**
	Department: 82 - COURSE MAINTENANCE Total:	**893,221.31**	**893,221.31**	**137,118.33**	**698,286.86**	**194,934.45**

REGULAR SESSION CITY COUNCIL MEETING PACKET FOR THE MEETING TO BE HELD ON SEPTEMBER 20, 2021

		Original Total Budget	Current Total Budget	MTD Activity	YTD Activity	Budget Remaining
Department: 83 - BUILDING MAINTENANCE						
Category: 35 - SUPPLIES						
11-83-3517	JANITORIAL SUPPLIES	4,200.00	4,200.00	585.10	7,269.43	-3,069.43
11-83-3523	TOOLS/EQUIPMENT	600.00	600.00	0.00	0.00	600.00
	Category: 35 - SUPPLIES Total:	**4,800.00**	**4,800.00**	**585.10**	**7,269.43**	**-2,469.43**
Category: 40 - MAINTENANCE--BLDGS, STRUC						
11-83-4001	BUILDINGS & GROUNDS	16,000.00	16,000.00	4,340.00	18,938.44	-2,938.44
	Category: 40 - MAINTENANCE--BLDGS, STRUC Total:	**16,000.00**	**16,000.00**	**4,340.00**	**18,938.44**	**-2,938.44**
Category: 45 - MAINTENANCE						
11-83-4501	FURN.FIXTURES, OFF EQUIP	3,000.00	3,000.00	0.00	357.98	2,642.02
	Category: 45 - MAINTENANCE Total:	**3,000.00**	**3,000.00**	**0.00**	**357.98**	**2,642.02**
Category: 50 - SERVICES						
11-83-5017	UTILITIES	26,000.00	26,000.00	1,889.94	19,677.10	6,322.90
	Category: 50 - SERVICES Total:	**26,000.00**	**26,000.00**	**1,889.94**	**19,677.10**	**6,322.90**
Category: 55 - PROFESSIONAL SERVICES						
11-83-5531	PEST CONTROL SERVICES	800.00	800.00	0.00	649.69	150.31
	Category: 55 - PROFESSIONAL SERVICES Total:	**800.00**	**800.00**	**0.00**	**649.69**	**150.31**
	Department: 83 - BUILDING MAINTENANCE Total:	**50,600.00**	**50,600.00**	**6,815.04**	**46,892.64**	**3,707.36**

REGULAR SESSION CITY COUNCIL MEETING PACKET FOR THE MEETING TO BE HELD ON SEPTEMBER 20, 2021

		Original Total Budget	Current Total Budget	MTD Activity	YTD Activity	Budget Remaining
Department: 87 - GC CAPITAL IMPROVEMENT						
Category: 70 - CAPITAL IMPROVEMENTS						
11-87-7010	CAPITAL IMPROVEMENT	26,000.00	131,000.00	0.00	46,930.79	84,069.21
	Category: 70 - CAPITAL IMPROVEMENTS Total:	**26,000.00**	**131,000.00**	**0.00**	**46,930.79**	**84,069.21**
	Department: 87 - GC CAPITAL IMPROVEMENT Total:	**26,000.00**	**131,000.00**	**0.00**	**46,930.79**	**84,069.21**

REGULAR SESSION CITY COUNCIL MEETING PACKET FOR THE MEETING TO BE HELD ON SEPTEMBER 20, 2021

		Original Total Budget	Current Total Budget	MTD Activity	YTD Activity	Budget Remaining
Department: 88 - EQUIPMENT MAINTENANCE						
Category: 30 - SALARIES, WAGES, & BENEFITS						
11-88-3001	SALARIES AND WAGES	51,803.23	51,803.23	3,465.60	38,374.38	13,428.85
11-88-3003	LONGEVITY	912.00	912.00	33.24	347.71	564.29
11-88-3007	OVERTIME	500.00	500.00	541.23	2,521.29	-2,021.29
11-88-3051	FICA/MEDICARE TAXES	3,681.76	3,681.76	304.19	3,099.64	582.12
11-88-3052	WORKER'S COMP	975.00	975.00	0.00	731.10	243.90
11-88-3053	UNEMPLOYMENT TAXES	144.00	144.00	0.73	403.42	-259.42
11-88-3054	RETIREMENT	7,343.37	7,343.37	564.40	5,789.01	1,554.36
11-88-3055	HEALTH INSURANCE	20,360.34	20,360.34	561.96	6,415.43	13,944.91
11-88-3056	LIFE INS	70.46	70.46	5.85	64.37	6.09
11-88-3057	DENTAL	1,160.12	1,160.12	34.74	395.86	764.26
11-88-3058	LONG TERM DISABILITY	219.67	219.67	14.56	161.26	58.41
	Category: 30 - SALARIES, WAGES, & BENEFITS Total:	**87,169.95**	**87,169.95**	**5,526.50**	**58,303.47**	**28,866.48**
Category: 35 - SUPPLIES						
11-88-3504	WEARING APPAREL	500.00	500.00	0.00	0.00	500.00
11-88-3514	FUEL & OIL	1,700.00	1,700.00	294.17	871.50	828.50
11-88-3523	TOOLS/EQUIPMENT	4,500.00	4,500.00	0.00	4,735.01	-235.01
11-88-3526	MINOR EQUIPMENT	1,000.00	1,000.00	0.00	0.00	1,000.00
11-88-3529	REPAIR PARTS	20,000.00	20,000.00	1,793.42	15,783.12	4,216.88
11-88-3535	GROUND/SHOP SUPPLIES	2,500.00	2,500.00	0.00	1,095.97	1,404.03
11-88-3542	FIRST AID	250.00	250.00	0.00	0.00	250.00
	Category: 35 - SUPPLIES Total:	**30,450.00**	**30,450.00**	**2,087.59**	**22,485.60**	**7,964.40**
Category: 45 - MAINTENANCE						
11-88-4520	AUTO REPAIR/OUTSOURCED	1,000.00	1,000.00	0.00	2,410.39	-1,410.39
11-88-4599	MISC EQUIPMENT MAINT.	5,000.00	5,000.00	0.00	0.00	5,000.00
	Category: 45 - MAINTENANCE Total:	**6,000.00**	**6,000.00**	**0.00**	**2,410.39**	**3,589.61**
Category: 50 - SERVICES						
11-88-5029	TRAVEL/TRAINING	500.00	500.00	0.00	418.00	82.00
	Category: 50 - SERVICES Total:	**500.00**	**500.00**	**0.00**	**418.00**	**82.00**
Category: 97 - INTERFUND ACTIVITY						
11-88-9781	TRANSFER TO EQUIP PURCH CONT	27,320.00	27,320.00	27,320.00	27,320.00	0.00
	Category: 97 - INTERFUND ACTIVITY Total:	**27,320.00**	**27,320.00**	**27,320.00**	**27,320.00**	**0.00**
	Department: 88 - EQUIPMENT MAINTENANCE Total:	**151,439.95**	**151,439.95**	**34,934.09**	**110,937.46**	**40,502.49**
	Fund: 11 - GOLF COURSE FUND Surplus (Deficit):	**0.00**	**-105,000.00**	**-193,746.62**	**-35,221.41**	
	Total Surplus (Deficit):	**-545,031.92**	**-650,031.92**	**-689,597.87**	**156,518.48**	

REGULAR SESSION CITY COUNCIL MEETING PACKET FOR THE MEETING TO BE HELD ON SEPTEMBER 20, 2021

Group Summary

Category	Original Total Budget	Current Total Budget	MTD Activity	YTD Activity	Budget Remaining
Fund: 02 - UTILITY FUND					
Department: 40 - REVENUES					
85 - FEE & CHARGES FOR SERVICE	4,635,000.00	4,635,000.00	427,444.41	4,040,796.23	594,203.77
96 - INTEREST EARNED	10,000.00	10,000.00	57.16	1,793.02	8,206.98
98 - MISCELLANEOUS REVENUE	127,500.00	127,500.00	5,409.17	114,181.73	13,318.27
Department: 40 - REVENUES Total:	**4,772,500.00**	**4,772,500.00**	**432,910.74**	**4,156,770.98**	**615,729.02**

REGULAR SESSION CITY COUNCIL MEETING PACKET FOR THE MEETING TO BE HELD ON SEPTEMBER 20, 2021

Category	Original Total Budget	Current Total Budget	MTD Activity	YTD Activity	Budget Remaining
Department: 45 - WATER & SEWER					
30 - SALARIES, WAGES, & BENEFITS	431,558.92	431,558.92	30,123.46	345,777.29	85,781.63
35 - SUPPLIES	42,200.00	42,200.00	3,236.40	47,002.88	-4,802.88
40 - MAINTENANCE--BLDGS, STRUC	144,500.00	144,500.00	48,670.47	454,133.35	-309,633.35
45 - MAINTENANCE	7,400.00	7,400.00	142.00	6,221.01	1,178.99
50 - SERVICES	540,060.00	540,060.00	44,360.87	464,745.79	75,314.21
54 - SUNDRY	1,748,900.00	1,748,900.00	2,834.76	1,054,322.13	694,577.87
55 - PROFESSIONAL SERVICES	210,000.00	210,000.00	0.00	25,632.60	184,367.40
60 - OTHER SERVICES	21,500.00	21,500.00	0.00	21,094.68	405.32
97 - INTERFUND ACTIVITY	799,413.00	799,413.00	799,413.00	799,413.00	0.00
Department: 45 - WATER & SEWER Total:	**3,945,531.92**	**3,945,531.92**	**928,780.96**	**3,218,342.73**	**727,189.19**

REGULAR SESSION CITY COUNCIL MEETING PACKET FOR THE MEETING TO BE HELD ON SEPTEMBER 20, 2021

Category	Original Total Budget	Current Total Budget	MTD Activity	YTD Activity	Budget Remaining
Department: 46 - UTILITY CAPITAL PROJECT					
70 - CAPITAL IMPROVEMENTS	1,450,000.00	1,450,000.00	0.00	806,856.64	643,143.36
Department: 46 - UTILITY CAPITAL PROJECT Total:	**1,450,000.00**	**1,450,000.00**	**0.00**	**806,856.64**	**643,143.36**
Fund: 02 - UTILITY FUND Surplus (Deficit):	**-623,031.92**	**-623,031.92**	**-495,870.22**	**131,571.61**	**-754,603.53**
Fund: 04 - IMPACT FEE FUND					
Department: 43 - 43					
85 - FEE & CHARGES FOR SERVICE	75,000.00	75,000.00	0.00	59,692.02	15,307.98
96 - INTEREST EARNED	3,000.00	3,000.00	18.97	476.26	2,523.74
Department: 43 - 43 Total:	**78,000.00**	**78,000.00**	**18.97**	**60,168.28**	**17,831.72**
Fund: 04 - IMPACT FEE FUND Total:	**78,000.00**	**78,000.00**	**18.97**	**60,168.28**	**17,831.72**
Fund: 11 - GOLF COURSE FUND					
Department: 80 - 80					
85 - FEE & CHARGES FOR SERVICE	1,609,800.00	1,609,800.00	127,842.18	1,691,353.08	-81,553.08
96 - INTEREST EARNED	1,000.00	1,000.00	4.93	61.28	938.72
97 - INTERFUND ACTIVITY	345,891.14	345,891.14	0.00	0.00	345,891.14
98 - MISCELLANEOUS REVENUE	25,000.00	25,000.00	0.00	25,760.25	-760.25
Department: 80 - 80 Total:	**1,981,691.14**	**1,981,691.14**	**127,847.11**	**1,717,174.61**	**264,516.53**

REGULAR SESSION CITY COUNCIL MEETING PACKET FOR THE MEETING TO BE HELD ON SEPTEMBER 20, 2021

Category	Original Total Budget	Current Total Budget	MTD Activity	YTD Activity	Budget Remaining
Department: 81 - CLUB HOUSE					
30 - SALARIES, WAGES, & BENEFITS	496,304.88	496,304.88	41,191.67	454,723.75	41,581.13
34 - COST OF SALES	155,000.00	155,000.00	24,108.25	182,225.63	-27,225.63
35 - SUPPLIES	17,150.00	17,150.00	129.39	10,343.95	6,806.05
45 - MAINTENANCE	4,450.00	4,450.00	0.00	3,179.64	1,270.36
50 - SERVICES	41,600.00	41,600.00	679.50	30,391.32	11,208.68
54 - SUNDRY	51,400.00	51,400.00	5,037.46	77,566.60	-26,166.60
55 - PROFESSIONAL SERVICES	3,500.00	3,500.00	555.00	555.00	2,945.00
60 - OTHER SERVICES	20,000.00	20,000.00	0.00	19,337.38	662.62
97 - INTERFUND ACTIVITY	71,025.00	71,025.00	71,025.00	71,025.00	0.00
Department: 81 - CLUB HOUSE Total:	**860,429.88**	**860,429.88**	**142,726.27**	**849,348.27**	**11,081.61**

REGULAR SESSION CITY COUNCIL MEETING PACKET FOR THE MEETING TO BE HELD ON SEPTEMBER 20, 2021

Category	Original Total Budget	Current Total Budget	MTD Activity	YTD Activity	Budget Remaining
Department: 82 - COURSE MAINTENANCE					
30 - SALARIES, WAGES, & BENEFITS	574,067.31	567,667.31	40,018.49	450,285.63	117,381.68
35 - SUPPLIES	98,700.00	98,700.00	1,573.90	108,926.92	-10,226.92
40 - MAINTENANCE--BLDGS, STRUC	5,000.00	5,000.00	0.00	0.00	5,000.00
45 - MAINTENANCE	19,000.00	19,000.00	47.69	15,684.77	3,315.23
50 - SERVICES	8,000.00	8,000.00	0.00	3,752.15	4,247.85
54 - SUNDRY	90,500.00	90,500.00	0.00	23,194.15	67,305.85
55 - PROFESSIONAL SERVICES	4,000.00	10,400.00	1,524.25	2,489.24	7,910.76
97 - INTERFUND ACTIVITY	93,954.00	93,954.00	93,954.00	93,954.00	0.00
Department: 82 - COURSE MAINTENANCE Total:	**893,221.31**	**893,221.31**	**137,118.33**	**698,286.86**	**194,934.45**

REGULAR SESSION CITY COUNCIL MEETING PACKET FOR THE MEETING TO BE HELD ON SEPTEMBER 20, 2021

Category	Original Total Budget	Current Total Budget	MTD Activity	YTD Activity	Budget Remaining
Department: 83 - BUILDING MAINTENANCE					
35 - SUPPLIES	4,800.00	4,800.00	585.10	7,269.43	-2,469.43
40 - MAINTENANCE--BLDGS, STRUC	16,000.00	16,000.00	4,340.00	18,938.44	-2,938.44
45 - MAINTENANCE	3,000.00	3,000.00	0.00	357.98	2,642.02
50 - SERVICES	26,000.00	26,000.00	1,889.94	19,677.10	6,322.90
55 - PROFESSIONAL SERVICES	800.00	800.00	0.00	649.69	150.31
Department: 83 - BUILDING MAINTENANCE Total:	**50,600.00**	**50,600.00**	**6,815.04**	**46,892.64**	**3,707.36**

REGULAR SESSION CITY COUNCIL MEETING PACKET FOR THE MEETING TO BE HELD ON SEPTEMBER 20, 2021

Category	Original Total Budget	Current Total Budget	MTD Activity	YTD Activity	Budget Remaining
Department: 87 - GC CAPITAL IMPROVEMENT					
70 - CAPITAL IMPROVEMENTS	26,000.00	131,000.00	0.00	46,930.79	84,069.21
Department: 87 - GC CAPITAL IMPROVEMENT Total:	**26,000.00**	**131,000.00**	**0.00**	**46,930.79**	**84,069.21**

REGULAR SESSION CITY COUNCIL MEETING PACKET FOR THE MEETING TO BE HELD ON SEPTEMBER 20, 2021

Category	Original Total Budget	Current Total Budget	MTD Activity	YTD Activity	Budget Remaining
Department: 88 - EQUIPMENT MAINTENANCE					
30 - SALARIES, WAGES, & BENEFITS	87,169.95	87,169.95	5,526.50	58,303.47	28,866.48
35 - SUPPLIES	30,450.00	30,450.00	2,087.59	22,485.60	7,964.40
45 - MAINTENANCE	6,000.00	6,000.00	0.00	2,410.39	3,589.61
50 - SERVICES	500.00	500.00	0.00	418.00	82.00
97 - INTERFUND ACTIVITY	27,320.00	27,320.00	27,320.00	27,320.00	0.00
Department: 88 - EQUIPMENT MAINTENANCE Total:	**151,439.95**	**151,439.95**	**34,934.09**	**110,937.46**	**40,502.49**
Fund: 11 - GOLF COURSE FUND Surplus (Deficit):	**0.00**	**-105,000.00**	**-193,746.62**	**-35,221.41**	**-69,778.59**
Total Surplus (Deficit):	**-545,031.92**	**-650,031.92**	**-689,597.87**	**156,518.48**	

REGULAR SESSION CITY COUNCIL MEETING PACKET FOR THE MEETING TO BE HELD ON SEPTEMBER 20, 2021

Fund Summary

Fund	Original Total Budget	Current Total Budget	MTD Activity	YTD Activity	Budget Remaining
02 - UTILITY FUND	-623,031.92	-623,031.92	-495,870.22	131,571.61	-754,603.53
04 - IMPACT FEE FUND	78,000.00	78,000.00	18.97	60,168.28	17,831.72
11 - GOLF COURSE FUND	0.00	-105,000.00	-193,746.62	-35,221.41	-69,778.59
Total Surplus (Deficit):	**-545,031.92**	**-650,031.92**	**-689,597.87**	**156,518.48**	

REGULAR SESSION CITY COUNCIL MEETING PACKET FOR THE MEETING TO BE HELD ON SEPTEMBER 20, 2021



Jersey Village, TX

Income Statement

Account Summary

For Fiscal: 2020-2021 Period Ending: 08/31/2021

		Original Total Budget	Current Total Budget	MTD Activity	YTD Activity	Budget Remaining
Fund: 01 - GENERAL FUND						
Department: 10 - REVENUES						
Category: 72 - PROPERTY TAXES						
01-10-7201	CURRENT PROPERTY TAXES	6,509,473.76	6,509,473.76	0.00	6,424,122.17	85,351.59
01-10-7202	DELINQUENT PROPERTY TAXES	30,000.00	30,000.00	21.03	33,291.88	-3,291.88
01-10-7203	PENALTY, INTEREST & COSTS	25,000.00	25,000.00	81.54	29,257.75	-4,257.75
	Category: 72 - PROPERTY TAXES Total:	**6,564,473.76**	**6,564,473.76**	**102.57**	**6,486,671.80**	**77,801.96**
Category: 75 - OTHER TAXES						
01-10-7511	ELECTRIC FRANCHISE	360,000.00	360,000.00	1,307.59	335,889.71	24,110.29
01-10-7512	TELEPHONE FRANCHISE	90,000.00	90,000.00	5,424.08	22,884.18	67,115.82
01-10-7513	GAS FRANCHISE	40,000.00	40,000.00	7,777.81	39,945.00	55.00
01-10-7514	CABLE TV FRANCHISE	75,000.00	75,000.00	19,504.22	78,096.18	-3,096.18
01-10-7515	TELECOMMUNICATION	15,000.00	15,000.00	3,118.88	13,087.85	1,912.15
01-10-7621	CITY SALES TAX	3,810,000.00	3,810,000.00	338,137.11	3,601,093.31	208,906.69
01-10-7622	SALES TX-RED. PROPERTY TX	1,905,000.00	1,905,000.00	169,068.56	1,799,482.35	105,517.65
01-10-7631	MIXED DRINK TAX	30,000.00	30,000.00	2,952.53	30,219.55	-219.55
	Category: 75 - OTHER TAXES Total:	**6,325,000.00**	**6,325,000.00**	**547,290.78**	**5,920,698.13**	**404,301.87**
Category: 80 - FINES WARRANTS & BONDS						
01-10-8001	FINES	1,000,000.00	1,000,000.00	47,675.52	596,209.26	403,790.74
01-10-8002	TIME PAYMENT FEE-GENERAL	10,000.00	10,000.00	370.00	4,171.27	5,828.73
01-10-8003	TIME PAYMENT FEE-COURT	0.00	0.00	55.00	750.43	-750.43
01-10-8004	COURT TECHNOLOGY FEES	0.00	0.00	1,078.23	12,658.95	-12,658.95
01-10-8005	COURT SECURITY FEE	0.00	0.00	1,129.25	12,805.71	-12,805.71
01-10-8006	OMNI FEE	8,000.00	8,000.00	440.00	5,790.25	2,209.75
01-10-8007	CHILD SAFETY FEE	0.00	0.00	0.00	375.00	-375.00
01-10-8008	JUDICIAL FEE	0.00	0.00	75.75	1,005.68	-1,005.68
	Category: 80 - FINES WARRANTS & BONDS Total:	**1,018,000.00**	**1,018,000.00**	**50,823.75**	**633,766.55**	**384,233.45**
Category: 85 - FEE & CHARGES FOR SERVICE						
01-10-8501	GARBAGE FEES/RESIDENTIAL	500.00	500.00	0.00	171.38	328.62
01-10-8503	POOL MEMBERSHIP FEES	20,000.00	20,000.00	2,367.00	26,501.00	-6,501.00
01-10-8504	SWIM LESSON	3,500.00	3,500.00	-190.00	5,840.00	-2,340.00
01-10-8505	POOL RENTALS	1,000.00	1,000.00	225.00	2,755.00	-1,755.00
01-10-8506	REC PROGRAMS	2,000.00	2,000.00	280.00	7,291.00	-5,291.00
01-10-8507	AMBULANCE SERVICE FEES	250,000.00	250,000.00	16,226.32	189,480.33	60,519.67
01-10-8509	PET TAGS	800.00	800.00	60.00	490.00	310.00
01-10-8511	JERSEY VILLAGE STICKERS	0.00	0.00	20.00	72.00	-72.00
01-10-8512	RENTAL FEE	40,000.00	40,000.00	0.00	36,196.51	3,803.49
01-10-8513	CHILD SAFETY FEE-COUNTY	9,000.00	9,000.00	843.39	8,704.30	295.70
01-10-8514	FOOD & BEVERAGE FEES	1,000.00	1,000.00	0.00	0.00	1,000.00
01-10-8516	FARMER'S MARKET FEES	7,200.00	7,200.00	402.00	6,702.00	498.00
01-10-8517	PARK RENTALS	750.00	750.00	50.00	12,120.00	-11,370.00
01-10-8999	PLAN CHECKING AND PLAT REVIEW	30,000.00	30,000.00	1,611.87	33,951.49	-3,951.49
	Category: 85 - FEE & CHARGES FOR SERVICE Total:	**365,750.00**	**365,750.00**	**21,895.58**	**330,275.01**	**35,474.99**
Category: 90 - LICENSES & PERMITS						
01-10-9001	BUILDING PERMITS	80,000.00	80,000.00	6,166.85	86,595.26	-6,595.26
01-10-9002	PLUMBING PERMITS	10,000.00	10,000.00	2,225.00	9,765.00	235.00
01-10-9003	ELECTRICAL PERMITS	16,000.00	16,000.00	1,725.00	11,284.00	4,716.00
01-10-9004	MECHANICAL PERMITS	8,000.00	8,000.00	875.00	6,842.50	1,157.50
01-10-9006	SIGN PERMITS	12,000.00	12,000.00	920.44	13,643.56	-1,643.56
01-10-9007	LIQUOR LICENSES	8,000.00	8,000.00	1,030.00	4,285.00	3,715.00
01-10-9010	ANTENNA ANNUAL FEES	5,000.00	5,000.00	0.00	4,305.92	694.08
01-10-9012	BURGLAR/FIRE ALARM PERMIT	8,500.00	8,500.00	171.80	3,233.21	5,266.79

REGULAR SESSION CITY COUNCIL MEETING PACKET FOR THE MEETING TO BE HELD ON SEPTEMBER 20, 2021

		Original Total Budget	Current Total Budget	MTD Activity	YTD Activity	Budget Remaining
01-10-9013	FIRE MARSHAL PERM FEES	1,100.00	1,100.00	0.00	236.00	864.00
01-10-9015	OPERATIONAL HARZADOUS PERM	100.00	100.00	0.00	0.00	100.00
01-10-9016	HOTEL/MOTEL LICENSE PERMITS	1,000.00	1,000.00	0.00	0.00	1,000.00
	Category: 90 - LICENSES & PERMITS Total:	**149,700.00**	**149,700.00**	**13,114.09**	**140,190.45**	**9,509.55**
Category: 96 - INTEREST EARNED						
01-10-9601	INTEREST EARNED	100,000.00	100,000.00	293.06	5,747.00	94,253.00
	Category: 96 - INTEREST EARNED Total:	**100,000.00**	**100,000.00**	**293.06**	**5,747.00**	**94,253.00**
Category: 97 - INTERFUND ACTIVITY						
01-10-9750	CRIME CONTROL DISTRICT REIMB.	1,834,230.70	1,834,230.70	0.00	1,750,192.45	84,038.25
01-10-9752	TRANSFER FROM UTLY FUND	590,000.00	590,000.00	590,000.00	590,000.00	0.00
01-10-9753	COURT SECURITY & TECH REIMB.	48,830.00	48,830.00	48,830.00	48,830.00	0.00
01-10-9754	TRANFER FROM MOTEL TAX FUND	19,000.00	19,000.00	19,000.00	19,000.00	0.00
	Category: 97 - INTERFUND ACTIVITY Total:	**2,492,060.70**	**2,492,060.70**	**657,830.00**	**2,408,022.45**	**84,038.25**
Category: 98 - MISCELLANEOUS REVENUE						
01-10-9802	SALE OF ASSETS	281,100.00	281,100.00	53,000.00	294,327.00	-13,227.00
01-10-9805	DONATIONS--PARK	0.00	0.00	0.00	1,100.00	-1,100.00
01-10-9807	DONATIONS - POLICE DEPT.	0.00	0.00	0.00	150.00	-150.00
01-10-9815	INSURANCE SETTLEMENT	0.00	0.00	0.00	10.00	-10.00
01-10-9816	PROPERTY LIENS/ORD VIOLATION	0.00	0.00	700.00	1,486.96	-1,486.96
01-10-9899	MISCELLANEOUS	50,000.00	50,000.00	5,385.79	126,333.45	-76,333.45
	Category: 98 - MISCELLANEOUS REVENUE Total:	**331,100.00**	**331,100.00**	**59,085.79**	**423,407.41**	**-92,307.41**
Category: 99 - OTHER AGENCY REVENUES						
01-10-9901	GRANTS/CONTRACTS-COPS	0.00	0.00	0.00	438,830.98	-438,830.98
01-10-9903	FEMA EMS GRANTS	0.00	0.00	0.00	22,280.76	-22,280.76
01-10-9904	FEMA	0.00	0.00	0.00	56,410.19	-56,410.19
01-10-9905	AMBULANCE FEES STATE GRANT	90,000.00	90,000.00	0.00	0.00	90,000.00
01-10-9906	LEOSE FUNDS - TRAINING GRANT	0.00	0.00	0.00	2,862.87	-2,862.87
	Category: 99 - OTHER AGENCY REVENUES Total:	**90,000.00**	**90,000.00**	**0.00**	**520,384.80**	**-430,384.80**
	Department: 10 - REVENUES Total:	**17,436,084.46**	**17,436,084.46**	**1,350,435.62**	**16,869,163.60**	**566,920.86**

REGULAR SESSION CITY COUNCIL MEETING PACKET FOR THE MEETING TO BE HELD ON SEPTEMBER 20, 2021

		Original Total Budget	Current Total Budget	MTD Activity	YTD Activity	Budget Remaining
Department: 11 - ADMINISTRATIVE SERVICE						
Category: 30 - SALARIES, WAGES, & BENEFITS						
01-11-3001	SALARIES	393,190.17	393,190.17	30,506.72	347,571.89	45,618.28
01-11-3002	WAGES	27,040.00	27,040.00	0.00	334.00	26,706.00
01-11-3003	LONGEVITY	815.88	815.88	75.68	792.34	23.54
01-11-3010	INCENTIVES	11,950.04	11,950.04	138.46	1,577.75	10,372.29
01-11-3020	EMPLOYEE AWARDS/BONUS	6,700.00	6,700.00	0.00	580.20	6,119.80
01-11-3051	FICA/MEDICARE TAXES	29,211.31	29,211.31	2,289.81	23,469.28	5,742.03
01-11-3052	WORKMEN'S COMPENSATION	11,627.00	11,627.00	0.00	8,709.29	2,917.71
01-11-3053	UNEMPLOYMENT COMPENSATION	720.00	720.00	5.62	1,257.47	-537.47
01-11-3054	RETIREMENT	57,908.83	57,908.83	4,361.55	50,049.10	7,859.73
01-11-3055	HEALTH INSURANCE	42,078.14	42,078.14	3,174.34	36,721.22	5,356.92
01-11-3056	LIFE INS	211.38	211.38	17.55	193.05	18.33
01-11-3057	DENTAL INSURANCE	2,771.86	2,771.86	213.22	2,433.20	338.66
01-11-3058	LONG-TERM DISABILITY	1,678.70	1,678.70	130.23	1,487.43	191.27
	Category: 30 - SALARIES, WAGES, & BENEFITS Total:	**585,903.31**	**585,903.31**	**40,913.18**	**475,176.22**	**110,727.09**
Category: 35 - SUPPLIES						
01-11-3502	POSTAGE/FREIGHT/DEL. FEE	150.00	150.00	0.00	0.00	150.00
01-11-3503	OFFICE SUPPLIES	4,000.00	4,000.00	297.03	3,009.97	990.03
01-11-3510	BOOKS & PERIODICALS	200.00	200.00	0.00	103.50	96.50
01-11-3520	FOOD	10,000.00	10,000.00	0.00	7,783.68	2,216.32
01-11-3524	FEMA SUPPLIES - MARCOS/LAURA	0.00	0.00	0.00	82.81	-82.81
	Category: 35 - SUPPLIES Total:	**14,350.00**	**14,350.00**	**297.03**	**10,979.96**	**3,370.04**
Category: 45 - MAINTENANCE						
01-11-4501	FURN.,FIXT.,& OFF. MACH.	2,000.00	2,000.00	0.00	0.00	2,000.00
	Category: 45 - MAINTENANCE Total:	**2,000.00**	**2,000.00**	**0.00**	**0.00**	**2,000.00**
Category: 50 - SERVICES						
01-11-5001	MAYOR & COUNCIL EXPENDITURES	4,000.00	4,000.00	418.67	2,832.49	1,167.51
01-11-5007	RECORDS MANAGEMENT	7,500.00	7,500.00	0.00	4,886.10	2,613.90
01-11-5012	PRINTING	250.00	250.00	0.00	0.00	250.00
01-11-5014	MEDICAL EXPENSES	10,000.00	10,000.00	1,874.00	9,592.00	408.00
01-11-5020	COMMUNICATIONS	3,600.00	3,600.00	65.51	1,242.66	2,357.34
01-11-5025	NEWSPAPER NOTICES	6,500.00	6,500.00	0.00	5,944.26	555.74
01-11-5026	CODIFICATIONS	7,400.00	7,400.00	2,314.16	7,288.36	111.64
01-11-5027	MEMBERSHIPS/SUBCRIPTIONS	6,000.00	6,000.00	100.00	6,942.73	-942.73
01-11-5028	TEXAS LEGISLATIVE SERVICES	1.00	1.00	0.00	0.00	1.00
01-11-5029	TRAVEL/TRAINING	14,000.00	14,000.00	404.80	6,546.44	7,453.56
01-11-5030	CAR ALLOWANCE	6,500.00	6,500.00	500.00	5,697.50	802.50
01-11-5041	NEWSLETTER	9,500.00	9,500.00	0.00	4,650.00	4,850.00
	Category: 50 - SERVICES Total:	**75,251.00**	**75,251.00**	**5,677.14**	**55,622.54**	**19,628.46**
Category: 54 - SUNDRY						
01-11-5401	ELECTION EXPENSE	16,000.00	16,000.00	0.00	22,787.62	-6,787.62
	Category: 54 - SUNDRY Total:	**16,000.00**	**16,000.00**	**0.00**	**22,787.62**	**-6,787.62**
Category: 60 - OTHER SERVICES						
01-11-6005	NOTARY SURETY BONDS	300.00	300.00	0.00	0.00	300.00
	Category: 60 - OTHER SERVICES Total:	**300.00**	**300.00**	**0.00**	**0.00**	**300.00**
Category: 97 - INTERFUND ACTIVITY						
01-11-9772	TECHNOLOGY USER FEE	4,500.00	4,500.00	4,500.00	4,500.00	0.00
	Category: 97 - INTERFUND ACTIVITY Total:	**4,500.00**	**4,500.00**	**4,500.00**	**4,500.00**	**0.00**
	Department: 11 - ADMINISTRATIVE SERVICE Total:	**698,304.31**	**698,304.31**	**51,387.35**	**569,066.34**	**129,237.97**

REGULAR SESSION CITY COUNCIL MEETING PACKET FOR THE MEETING TO BE HELD ON SEPTEMBER 20, 2021

		Original Total Budget	Current Total Budget	MTD Activity	YTD Activity	Budget Remaining
Department: 12 - LEGAL/OTHER SERVICES						
Category: 30 - SALARIES, WAGES, & BENEFITS						
01-12-3052	WORKMEN'S COMPENSATION	250.00	250.00	0.00	224.95	25.05
	Category: 30 - SALARIES, WAGES, & BENEFITS Total:	**250.00**	**250.00**	**0.00**	**224.95**	**25.05**
Category: 50 - SERVICES						
01-12-5023	GRANTS AND INCENTIVES	2,172,000.00	2,172,000.00	370,695.22	1,248,255.34	923,744.66
	Category: 50 - SERVICES Total:	**2,172,000.00**	**2,172,000.00**	**370,695.22**	**1,248,255.34**	**923,744.66**
Category: 55 - PROFESSIONAL SERVICES						
01-12-5502	LEGAL FEES	125,000.00	125,000.00	12,031.82	89,697.92	35,302.08
01-12-5515	CONSULTANT SERVICES	10,000.00	10,000.00	0.00	2,000.00	8,000.00
	Category: 55 - PROFESSIONAL SERVICES Total:	**135,000.00**	**135,000.00**	**12,031.82**	**91,697.92**	**43,302.08**
Category: 60 - OTHER SERVICES						
01-12-6001	AUTOMOBILE LIABILITY	45,350.00	45,350.00	0.00	52,735.76	-7,385.76
01-12-6003	LIABILITY-FIRE & CASUALTY INSR	69,140.00	69,140.00	0.00	66,908.31	2,231.69
01-12-6005	SURETY BONDS	500.00	500.00	0.00	565.46	-65.46
	Category: 60 - OTHER SERVICES Total:	**114,990.00**	**114,990.00**	**0.00**	**120,209.53**	**-5,219.53**
Category: 97 - INTERFUND ACTIVITY						
01-12-9760	TRFR TO CAPITAL IMPROVEMENTS	1,080,000.00	1,080,000.00	0.00	0.00	1,080,000.00
01-12-9761	TRANSFER TO GOLF FUND	345,891.14	345,891.14	0.00	0.00	345,891.14
01-12-9772	TECHNOLOGY USER FEES	375.00	375.00	375.00	375.00	0.00
	Category: 97 - INTERFUND ACTIVITY Total:	**1,426,266.14**	**1,426,266.14**	**375.00**	**375.00**	**1,425,891.14**
	Department: 12 - LEGAL/OTHER SERVICES Total:	**3,848,506.14**	**3,848,506.14**	**383,102.04**	**1,460,762.74**	**2,387,743.40**

REGULAR SESSION CITY COUNCIL MEETING PACKET FOR THE MEETING TO BE HELD ON SEPTEMBER 20, 2021

		Original Total Budget	Current Total Budget	MTD Activity	YTD Activity	Budget Remaining
Department: 13 - INFO TECHNOLOGY						
Category: 30 - SALARIES, WAGES, & BENEFITS						
01-13-3001	SALARIES	240,349.76	240,349.76	18,389.00	206,617.15	33,732.61
01-13-3002	WAGES	10,230.00	10,230.00	500.50	4,950.00	5,280.00
01-13-3003	LONGEVITY	1,055.86	1,055.86	96.00	1,005.73	50.13
01-13-3007	OVERTIME	0.00	0.00	0.00	127.90	-127.90
01-13-3010	INCENTIVES	1,200.00	1,200.00	0.00	0.00	1,200.00
01-13-3051	FICA/MEDICARE TAXES	18,565.20	18,565.20	1,399.70	15,672.96	2,892.24
01-13-3052	WORKMEN'S COMPENSATION	449.00	449.00	0.00	336.67	112.33
01-13-3053	EMPLOYMENT TAXES	576.00	576.00	17.42	1,426.57	-850.57
01-13-3054	RETIREMENT	33,893.34	33,893.34	2,582.36	29,162.94	4,730.40
01-13-3055	HEALTH INSURANCE	29,166.80	29,166.80	2,191.28	25,006.93	4,159.87
01-13-3056	LIFE INS	211.38	211.38	17.55	193.05	18.33
01-13-3057	DENTAL INSURANCE	2,771.86	2,771.86	213.22	2,422.95	348.91
01-13-3058	LONG-TERM DISABILITY	1,009.47	1,009.47	77.24	867.85	141.62
	Category: 30 - SALARIES, WAGES, & BENEFITS Total:	**339,478.67**	**339,478.67**	**25,484.27**	**287,790.70**	**51,687.97**
Category: 35 - SUPPLIES						
01-13-3502	POSTAGE/FREIGHT	500.00	500.00	0.00	96.22	403.78
01-13-3503	OFFICE SUPPLIES	250.00	250.00	0.00	0.00	250.00
01-13-3509	COMPUTER SUPPLIES	2,200.00	2,200.00	0.00	1,253.69	946.31
01-13-3510	BOOKS & PERIODICALS	100.00	100.00	0.00	0.00	100.00
	Category: 35 - SUPPLIES Total:	**3,050.00**	**3,050.00**	**0.00**	**1,349.91**	**1,700.09**
Category: 45 - MAINTENANCE						
01-13-4501	FURN. FIXTURES. OFF EQUIPMENT	6,314.00	6,314.00	209.17	13,935.42	-7,621.42
01-13-4502	COMPUTER EQUIPMENT	9,500.00	9,500.00	0.00	6,915.05	2,584.95
01-13-4504	SOFTWARE MAINTENANCE	203,464.00	203,464.00	9,927.37	174,694.35	28,769.65
	Category: 45 - MAINTENANCE Total:	**219,278.00**	**219,278.00**	**10,136.54**	**195,544.82**	**23,733.18**
Category: 50 - SERVICES						
01-13-5020	COMMUNICATIONS	28,020.00	28,020.00	165.51	21,816.91	6,203.09
01-13-5027	MEMBERSHIPS/SUBSCRIPT	1,450.00	1,450.00	0.00	984.45	465.55
01-13-5029	TRAVEL/TRAINING	7,600.00	7,600.00	0.00	0.00	7,600.00
	Category: 50 - SERVICES Total:	**37,070.00**	**37,070.00**	**165.51**	**22,801.36**	**14,268.64**
Category: 55 - PROFESSIONAL SERVICES						
01-13-5515	CONSULTANT SERVICES	45,000.00	45,000.00	0.00	19,088.00	25,912.00
	Category: 55 - PROFESSIONAL SERVICES Total:	**45,000.00**	**45,000.00**	**0.00**	**19,088.00**	**25,912.00**
Category: 65 - CAPITAL OUTLAY						
01-13-6573	COMPUTER EQUIPMENT	9,000.00	9,000.00	0.00	11,058.40	-2,058.40
01-13-6574	COMPUTER SOFTWARE	50,000.00	50,000.00	2,073.75	46,080.25	3,919.75
	Category: 65 - CAPITAL OUTLAY Total:	**59,000.00**	**59,000.00**	**2,073.75**	**57,138.65**	**1,861.35**
Category: 97 - INTERFUND ACTIVITY						
01-13-9772	TECHNOLOGY USER FEE	48,775.00	48,775.00	48,775.00	48,775.00	0.00
	Category: 97 - INTERFUND ACTIVITY Total:	**48,775.00**	**48,775.00**	**48,775.00**	**48,775.00**	**0.00**
	Department: 13 - INFO TECHNOLOGY Total:	**751,651.67**	**751,651.67**	**86,635.07**	**632,488.44**	**119,163.23**

REGULAR SESSION CITY COUNCIL MEETING PACKET FOR THE MEETING TO BE HELD ON SEPTEMBER 20, 2021

		Original Total Budget	Current Total Budget	MTD Activity	YTD Activity	Budget Remaining
Department: 14 - PURCHASING						
Category: 35 - SUPPLIES						
01-14-3502	POSTAGE/FREIGHT	17,000.00	17,000.00	1,547.91	13,228.25	3,771.75
01-14-3503	OFFICE SUPPLIES	3,000.00	3,000.00	0.00	1,902.01	1,097.99
	Category: 35 - SUPPLIES Total:	**20,000.00**	**20,000.00**	**1,547.91**	**15,130.26**	**4,869.74**
Category: 50 - SERVICES						
01-14-5012	PRINTING	1,000.00	1,000.00	0.00	0.00	1,000.00
01-14-5022	RENTAL OF EQUIPMENT	2,000.00	2,000.00	0.00	2,004.75	-4.75
	Category: 50 - SERVICES Total:	**3,000.00**	**3,000.00**	**0.00**	**2,004.75**	**995.25**
	Department: 14 - PURCHASING Total:	**23,000.00**	**23,000.00**	**1,547.91**	**17,135.01**	**5,864.99**

REGULAR SESSION CITY COUNCIL MEETING PACKET FOR THE MEETING TO BE HELD ON SEPTEMBER 20, 2021

		Original Total Budget	Current Total Budget	MTD Activity	YTD Activity	Budget Remaining
Department: 15 - ACCOUNTING SERVICES						
Category: 30 - SALARIES, WAGES, & BENEFITS						
01-15-3001	SALARIES	239,252.14	294,252.14	19,864.54	218,729.53	75,522.61
01-15-3003	LONGEVITY	1,440.14	1,440.14	55.38	923.68	516.46
01-15-3007	OVERTIME	2,900.00	2,900.00	0.00	203.99	2,696.01
01-15-3010	INCENTIVES	600.08	600.08	0.00	0.00	600.08
01-15-3051	FICA/MEDICARE TAXES	18,139.75	18,139.75	1,436.88	15,170.94	2,968.81
01-15-3052	WORKMEN'S COMPENSATION	446.00	446.00	0.00	334.43	111.57
01-15-3053	EMPLOYMENT TAXES	478.40	478.40	3.05	1,854.79	-1,376.39
01-15-3054	RETIREMENT	34,284.60	34,284.60	2,782.80	30,846.80	3,437.80
01-15-3055	HEALTH INSURANCE	34,513.70	34,513.70	4,148.36	39,412.13	-4,898.43
01-15-3056	LIFE INS	211.38	211.38	17.55	193.05	18.33
01-15-3057	DENTAL INSURANCE	2,771.86	2,771.86	267.72	2,604.90	166.96
01-15-3058	LONG-TERM DISABILITY	1,004.86	1,004.86	83.42	918.52	86.34
	Category: 30 - SALARIES, WAGES, & BENEFITS Total:	**336,042.91**	**391,042.91**	**28,659.70**	**311,192.76**	**79,850.15**
Category: 35 - SUPPLIES						
01-15-3502	POSTAGE/FREIGHT/DEL.FEE	200.00	200.00	0.00	0.00	200.00
01-15-3503	OFFICE SUPPLIES	700.00	700.00	0.00	668.84	31.16
01-15-3510	BOOKS & PERIODICALS	50.00	50.00	0.00	0.00	50.00
	Category: 35 - SUPPLIES Total:	**950.00**	**950.00**	**0.00**	**668.84**	**281.16**
Category: 45 - MAINTENANCE						
01-15-4501	FURN.FIXT. & OFF.MACH.	150.00	150.00	0.00	0.00	150.00
	Category: 45 - MAINTENANCE Total:	**150.00**	**150.00**	**0.00**	**0.00**	**150.00**
Category: 50 - SERVICES						
01-15-5012	PRINTING	1,200.00	1,200.00	0.00	177.23	1,022.77
01-15-5020	COMMUNICATIONS	2,000.00	2,000.00	65.51	920.09	1,079.91
01-15-5027	MEMBERSHIPS	400.00	400.00	0.00	312.50	87.50
01-15-5029	TRAVEL/TRAINING	3,500.00	3,500.00	0.00	658.35	2,841.65
	Category: 50 - SERVICES Total:	**7,100.00**	**7,100.00**	**65.51**	**2,068.17**	**5,031.83**
Category: 54 - SUNDRY						
01-15-5405	PERMITS & FEES	550.00	550.00	0.00	460.00	90.00
	Category: 54 - SUNDRY Total:	**550.00**	**550.00**	**0.00**	**460.00**	**90.00**
Category: 55 - PROFESSIONAL SERVICES						
01-15-5501	AUDITS/CONTRACTS/STUDIES	27,000.00	27,000.00	1,718.32	48,487.66	-21,487.66
	Category: 55 - PROFESSIONAL SERVICES Total:	**27,000.00**	**27,000.00**	**1,718.32**	**48,487.66**	**-21,487.66**
Category: 97 - INTERFUND ACTIVITY						
01-15-9772	TECHNOLOGY USER FEE	1,575.00	1,575.00	1,575.00	1,575.00	0.00
	Category: 97 - INTERFUND ACTIVITY Total:	**1,575.00**	**1,575.00**	**1,575.00**	**1,575.00**	**0.00**
	Department: 15 - ACCOUNTING SERVICES Total:	**373,367.91**	**428,367.91**	**32,018.53**	**364,452.43**	**63,915.48**

REGULAR SESSION CITY COUNCIL MEETING PACKET FOR THE MEETING TO BE HELD ON SEPTEMBER 20, 2021

		Original Total Budget	Current Total Budget	MTD Activity	YTD Activity	Budget Remaining
Department: 16 - CUSTOMER SERVICE						
Category: 30 - SALARIES, WAGES, & BENEFITS						
01-16-3001	SALARIES	38,520.35	38,520.35	2,963.20	33,352.00	5,168.35
01-16-3003	LONGEVITY	528.06	528.06	44.30	488.62	39.44
01-16-3007	OVERTIME	100.00	100.00	0.00	0.00	100.00
01-16-3010	INCENTIVES	479.96	479.96	83.08	946.70	-466.74
01-16-3051	FICA/MEDICARE TAXES	2,736.84	2,736.84	212.00	2,387.97	348.87
01-16-3052	WORKMEN'S COMPENSATION	75.00	75.00	0.00	56.24	18.76
01-16-3053	EMPLOYMENT TAXES	144.00	144.00	0.56	402.23	-258.23
01-16-3054	RETIREMENT	5,563.82	5,563.82	431.76	4,883.29	680.53
01-16-3055	HEALTH INSURANCE	14,268.80	14,268.80	1,076.43	12,276.40	1,992.40
01-16-3056	LIFE INS	70.46	70.46	5.85	64.35	6.11
01-16-3057	DENTAL INSURANCE	1,160.12	1,160.12	89.24	1,016.89	143.23
01-16-3058	LONG-TERM DISABILITY	162.21	162.21	12.44	140.03	22.18
	Category: 30 - SALARIES, WAGES, & BENEFITS Total:	**63,809.62**	**63,809.62**	**4,918.86**	**56,014.72**	**7,794.90**
Category: 35 - SUPPLIES						
01-16-3503	OFFICE SUPPLIES	500.00	500.00	290.28	771.80	-271.80
	Category: 35 - SUPPLIES Total:	**500.00**	**500.00**	**290.28**	**771.80**	**-271.80**
Category: 45 - MAINTENANCE						
01-16-4501	FURN., FIX, & OFF MACH EQ	400.00	400.00	0.00	0.00	400.00
	Category: 45 - MAINTENANCE Total:	**400.00**	**400.00**	**0.00**	**0.00**	**400.00**
Category: 50 - SERVICES						
01-16-5020	COMMUNICATIONS	3,000.00	3,000.00	65.51	920.05	2,079.95
	Category: 50 - SERVICES Total:	**3,000.00**	**3,000.00**	**65.51**	**920.05**	**2,079.95**
Category: 55 - PROFESSIONAL SERVICES						
01-16-5527	HARRIS CTY APPRAISAL DIST	61,000.00	61,000.00	14,310.00	57,314.00	3,686.00
01-16-5528	HARRIS CTY TAX OFFICE	7,000.00	7,000.00	0.00	5,604.87	1,395.13
	Category: 55 - PROFESSIONAL SERVICES Total:	**68,000.00**	**68,000.00**	**14,310.00**	**62,918.87**	**5,081.13**
Category: 97 - INTERFUND ACTIVITY						
01-16-9772	TECHNOLOGY USER FEE	375.00	375.00	375.00	375.00	0.00
	Category: 97 - INTERFUND ACTIVITY Total:	**375.00**	**375.00**	**375.00**	**375.00**	**0.00**
	Department: 16 - CUSTOMER SERVICE Total:	**136,084.62**	**136,084.62**	**19,959.65**	**121,000.44**	**15,084.18**

REGULAR SESSION CITY COUNCIL MEETING PACKET FOR THE MEETING TO BE HELD ON SEPTEMBER 20, 2021

		Original Total Budget	Current Total Budget	MTD Activity	YTD Activity	Budget Remaining
Department: 19 - MUNICIPAL COURT						
Category: 30 - SALARIES, WAGES, & BENEFITS						
01-19-3001	SALARIES	212,823.34	212,823.34	12,247.80	130,628.82	82,194.52
01-19-3003	LONGEVITY	864.24	864.24	77.54	853.42	10.82
01-19-3007	OVERTIME	5,000.00	5,000.00	0.00	0.00	5,000.00
01-19-3010	INCENTIVES	1,080.04	1,080.04	129.24	1,472.69	-392.65
01-19-3051	FICA/MEDICARE TAXES	16,154.37	16,154.37	917.10	10,433.81	5,720.56
01-19-3052	WORKMEN'S COMPENSATION	469.00	469.00	0.00	351.67	117.33
01-19-3053	EMPLOYMENT TAXES	656.00	656.00	2.26	1,209.06	-553.06
01-19-3054	RETIREMENT	30,855.38	30,855.38	1,739.90	19,892.50	10,962.88
01-19-3055	HEALTH INSURANCE	47,425.04	47,425.04	2,501.28	28,539.91	18,885.13
01-19-3056	LIFE INS	281.84	281.84	17.55	193.05	88.79
01-19-3057	DENTAL INSURANCE	2,771.86	2,771.86	178.48	2,033.78	738.08
01-19-3058	LONG-TERM DISABILITY	893.86	893.86	51.44	585.40	308.46
	Category: 30 - SALARIES, WAGES, & BENEFITS Total:	**319,274.97**	**319,274.97**	**17,862.59**	**196,194.11**	**123,080.86**
Category: 35 - SUPPLIES						
01-19-3503	OFFICE SUPPLIES	2,000.00	2,000.00	0.00	865.89	1,134.11
01-19-3510	BOOKS & PERIODICALS	200.00	200.00	0.00	0.00	200.00
01-19-3523	TOOLS/EQUIPMENT	100.00	100.00	0.00	0.00	100.00
	Category: 35 - SUPPLIES Total:	**2,300.00**	**2,300.00**	**0.00**	**865.89**	**1,434.11**
Category: 45 - MAINTENANCE						
01-19-4501	FURN., FIXT. & OFF. MACH.	500.00	500.00	0.00	0.00	500.00
	Category: 45 - MAINTENANCE Total:	**500.00**	**500.00**	**0.00**	**0.00**	**500.00**
Category: 50 - SERVICES						
01-19-5012	PRINTING	2,000.00	2,000.00	0.00	1,425.15	574.85
01-19-5020	COMMUNICATIONS	2,000.00	2,000.00	65.51	920.05	1,079.95
01-19-5027	MEMBERSHIPS	300.00	300.00	0.00	0.00	300.00
01-19-5029	TRAVEL/TRAINING	3,500.00	3,500.00	0.00	0.00	3,500.00
	Category: 50 - SERVICES Total:	**7,800.00**	**7,800.00**	**65.51**	**2,345.20**	**5,454.80**
Category: 54 - SUNDRY						
01-19-5404	JURY EXPENSE	800.00	800.00	0.00	0.00	800.00
01-19-5405	CREDIT CARD FEES	0.00	0.00	0.00	19.50	-19.50
	Category: 54 - SUNDRY Total:	**800.00**	**800.00**	**0.00**	**19.50**	**780.50**
Category: 55 - PROFESSIONAL SERVICES						
01-19-5505	JUDGES	55,000.00	55,000.00	3,700.00	24,275.00	30,725.00
01-19-5506	PROSECUTORS	35,000.00	35,000.00	2,100.00	18,000.00	17,000.00
01-19-5516	COLLECTION AGENCY FEES	2,950.00	2,950.00	0.00	2,843.50	106.50
01-19-5518	INTERPRETERS	500.00	500.00	0.00	0.00	500.00
	Category: 55 - PROFESSIONAL SERVICES Total:	**93,450.00**	**93,450.00**	**5,800.00**	**45,118.50**	**48,331.50**
	Department: 19 - MUNICIPAL COURT Total:	**424,124.97**	**424,124.97**	**23,728.10**	**244,543.20**	**179,581.77**

REGULAR SESSION CITY COUNCIL MEETING PACKET FOR THE MEETING TO BE HELD ON SEPTEMBER 20, 2021

		Original Total Budget	Current Total Budget	MTD Activity	YTD Activity	Budget Remaining
Department: 21 - POLICE						
Category: 30 - SALARIES, WAGES, & BENEFITS						
01-21-3001	SALARIES	2,136,626.84	2,136,626.84	169,650.52	1,803,795.39	332,831.45
01-21-3003	LONGEVITY	5,855.98	5,855.98	397.00	4,892.83	963.15
01-21-3007	OVERTIME	82,000.00	82,000.00	13,547.97	130,526.94	-48,526.94
01-21-3010	INCENTIVES	23,158.72	23,158.72	2,427.59	30,508.85	-7,350.13
01-21-3014	S.T.E.P. PROGRAM	100,000.00	100,000.00	2,639.24	30,267.83	69,732.17
01-21-3051	FICA/MEDICARE TAXES	171,725.71	171,725.71	13,896.29	147,149.51	24,576.20
01-21-3052	WORKMEN'S COMPENSATION	44,631.00	44,631.00	0.00	31,091.77	13,539.23
01-21-3053	EMPLOYMENT TAXES	4,752.00	4,752.00	22.39	13,962.84	-9,210.84
01-21-3054	RETIREMENT	312,367.72	312,367.72	26,218.12	278,993.20	33,374.52
01-21-3055	HEALTH INSURANCE	380,790.80	380,790.80	27,946.57	298,731.53	82,059.27
01-21-3056	LIFE INS	2,113.80	2,113.80	163.80	1,737.45	376.35
01-21-3057	DENTAL INSURANCE	23,724.48	23,724.48	1,862.09	19,759.82	3,964.66
01-21-3058	LONG-TERM DISABILITY	8,878.04	8,878.04	709.23	7,534.30	1,343.74
	Category: 30 - SALARIES, WAGES, & BENEFITS Total:	**3,296,625.09**	**3,296,625.09**	**259,480.81**	**2,798,952.26**	**497,672.83**
Category: 35 - SUPPLIES						
01-21-3502	POSTAGE/FREIGHT/DEL. FEE	300.00	300.00	0.00	80.63	219.37
01-21-3503	OFFICE SUPPLIES	7,900.00	7,900.00	155.65	5,593.60	2,306.40
01-21-3504	WEARING APPAREL	29,474.00	29,474.00	106.17	28,103.13	1,370.87
01-21-3505	CRIME PREVENTION SUPPLIES	2,000.00	2,000.00	0.00	1,695.51	304.49
01-21-3510	BOOKS AND PERIODICALS	3,850.00	3,850.00	0.00	2,542.90	1,307.10
01-21-3515	MEDICAL SUPPLIES	2,000.00	2,000.00	0.00	1,755.84	244.16
01-21-3519	AMMUNITION AND TARGETS	10,000.00	10,000.00	0.00	3,746.98	6,253.02
01-21-3520	FOOD	2,400.00	2,400.00	0.00	568.74	1,831.26
01-21-3523	TOOLS/EQUIPMENT	69,100.00	70,222.00	2,563.25	51,235.09	18,986.91
01-21-3534	PARTS AND MATERIALS	500.00	500.00	24.00	58.31	441.69
	Category: 35 - SUPPLIES Total:	**127,524.00**	**128,646.00**	**2,849.07**	**95,380.73**	**33,265.27**
Category: 45 - MAINTENANCE						
01-21-4501	FURN. FIXT. & OFF. MACH.	5,597.00	5,597.00	187.92	3,407.91	2,189.09
01-21-4503	RADIO AND RADAR EQUIPMENT	2,500.00	2,500.00	0.00	25.00	2,475.00
01-21-4510	VEHICLE CLEANING	2,000.00	2,000.00	172.00	730.98	1,269.02
01-21-4599	MISCELLANEOUS EQUIPMENT	15,400.00	13,400.00	4,010.00	4,585.47	8,814.53
	Category: 45 - MAINTENANCE Total:	**25,497.00**	**23,497.00**	**4,369.92**	**8,749.36**	**14,747.64**
Category: 50 - SERVICES						
01-21-5012	PRINTING	2,000.00	2,000.00	445.00	1,493.70	506.30
01-21-5015	LAB TESTS	2,400.00	2,400.00	0.00	700.00	1,700.00
01-21-5020	COMMUNICATIONS	1,199.90	3,199.90	157.81	3,563.82	-363.92
01-21-5022	RENTAL OF EQUIPMENT	10,000.00	10,000.00	890.25	8,970.50	1,029.50
01-21-5025	PUBLIC NOTICES	250.00	250.00	0.00	0.00	250.00
01-21-5027	MEMBERSHIPS	1,400.00	1,400.00	0.00	510.00	890.00
01-21-5029	TRAVEL/TRAINING	24,000.00	24,000.00	0.00	22,214.74	1,785.26
	Category: 50 - SERVICES Total:	**41,249.90**	**43,249.90**	**1,493.06**	**37,452.76**	**5,797.14**
Category: 54 - SUNDRY						
01-21-5402	JAIL EXPENSE	3,000.00	3,000.00	0.00	973.16	2,026.84
	Category: 54 - SUNDRY Total:	**3,000.00**	**3,000.00**	**0.00**	**973.16**	**2,026.84**
Category: 55 - PROFESSIONAL SERVICES						
01-21-5515	CONSULTANT SERVICES	1,800.00	1,800.00	0.00	1,598.21	201.79
	Category: 55 - PROFESSIONAL SERVICES Total:	**1,800.00**	**1,800.00**	**0.00**	**1,598.21**	**201.79**
Category: 60 - OTHER SERVICES						
01-21-6003	LIABILITY-FIRE & CASUALTY INSR	21,400.00	21,400.00	0.00	16,890.30	4,509.70
01-21-6005	NOTARY SURETY BONDS	340.00	340.00	0.00	0.00	340.00
	Category: 60 - OTHER SERVICES Total:	**21,740.00**	**21,740.00**	**0.00**	**16,890.30**	**4,849.70**
Category: 65 - CAPITAL OUTLAY						
01-21-6572	SPECIAL EQUIPMENT-	13,000.00	13,000.00	0.00	8,975.00	4,025.00
	Category: 65 - CAPITAL OUTLAY Total:	**13,000.00**	**13,000.00**	**0.00**	**8,975.00**	**4,025.00**

REGULAR SESSION CITY COUNCIL MEETING PACKET FOR THE MEETING TO BE HELD ON SEPTEMBER 20, 2021

		Original Total Budget	Current Total Budget	MTD Activity	YTD Activity	Budget Remaining
Category: 97 - INTERFUND ACTIVITY						
01-21-9772	TECHNOLOGY USER FEE	16,025.00	16,025.00	16,025.00	16,025.00	0.00
	Category: 97 - INTERFUND ACTIVITY Total:	**16,025.00**	**16,025.00**	**16,025.00**	**16,025.00**	**0.00**
	Department: 21 - POLICE Total:	**3,546,460.99**	**3,547,582.99**	**284,217.86**	**2,984,996.78**	**562,586.21**

REGULAR SESSION CITY COUNCIL MEETING PACKET FOR THE MEETING TO BE HELD ON SEPTEMBER 20, 2021

		Original Total Budget	Current Total Budget	MTD Activity	YTD Activity	Budget Remaining
Department: 23 - COMMUNICATIONS						
Category: 30 - SALARIES, WAGES, & BENEFITS						
01-23-3001	SALARIES	423,207.50	423,207.50	29,324.37	360,382.12	62,825.38
01-23-3002	WAGES	12,900.00	12,900.00	150.00	1,472.89	11,427.11
01-23-3003	LONGEVITY	1,343.94	1,343.94	121.82	1,323.43	20.51
01-23-3007	OVERTIME	77,000.00	77,000.00	6,092.35	72,182.79	4,817.21
01-23-3010	INCENTIVES	13,500.00	13,500.00	950.70	10,584.48	2,915.52
01-23-3051	FICA/MEDICARE TAXES	38,632.56	38,632.56	2,672.36	32,516.23	6,116.33
01-23-3052	WORKMEN'S COMPENSATION	982.00	982.00	0.00	736.33	245.67
01-23-3053	EMPLOYMENT TAXES	1,584.00	1,584.00	97.75	3,967.63	-2,383.63
01-23-3054	RETIREMENT	58,865.07	58,865.07	5,118.51	62,494.92	-3,629.85
01-23-3055	HEALTH INSURANCE	88,774.92	88,774.92	6,308.85	79,563.05	9,211.87
01-23-3056	LIFE INS	563.68	563.68	46.80	538.20	25.48
01-23-3057	DENTAL INSURANCE	5,543.72	5,543.72	371.94	4,918.20	625.52
01-23-3058	LONG-TERM DISABILITY	1,588.60	1,588.60	124.03	1,521.51	67.09
	Category: 30 - SALARIES, WAGES, & BENEFITS Total:	**724,485.99**	**724,485.99**	**51,379.48**	**632,201.78**	**92,284.21**
Category: 35 - SUPPLIES						
01-23-3502	POSTAGE	100.00	100.00	0.00	0.00	100.00
01-23-3503	OFFICE SUPPLIES	6,390.00	6,390.00	0.00	3,128.75	3,261.25
01-23-3504	WEARING APPAREL	3,475.00	3,475.00	0.00	1,718.68	1,756.32
01-23-3510	BOOKS AND PERIODICALS	400.00	400.00	0.00	350.48	49.52
01-23-3523	TOOLS/EQUIPMENT	3,000.00	3,000.00	0.00	2,585.43	414.57
	Category: 35 - SUPPLIES Total:	**13,365.00**	**13,365.00**	**0.00**	**7,783.34**	**5,581.66**
Category: 45 - MAINTENANCE						
01-23-4501	FURN.FIXT. & OFF.MACH.	6,800.00	6,800.00	0.00	126.52	6,673.48
01-23-4503	RADIO AND RADAR EQUIPMENT	1,250.00	1,250.00	0.00	1,145.49	104.51
01-23-4505	TELEPHONE MAINTENANCE	13,400.00	13,400.00	13,400.00	13,400.00	0.00
01-23-4599	MISCELLANEOUS EQUIPMENT	600.00	600.00	0.00	257.88	342.12
	Category: 45 - MAINTENANCE Total:	**22,050.00**	**22,050.00**	**13,400.00**	**14,929.89**	**7,120.11**
Category: 50 - SERVICES						
01-23-5012	PRINTING	100.00	100.00	0.00	38.97	61.03
01-23-5020	COMMUNICATIONS	3,000.00	3,000.00	65.50	1,110.07	1,889.93
01-23-5024	RADIO USAGE FEES	2,000.00	2,000.00	89.00	890.00	1,110.00
01-23-5027	MEMBERSHIPS	1,200.00	1,200.00	0.00	527.00	673.00
01-23-5029	TRAVEL/TRAINING	6,000.00	6,000.00	0.00	2,808.50	3,191.50
	Category: 50 - SERVICES Total:	**12,300.00**	**12,300.00**	**154.50**	**5,374.54**	**6,925.46**
Category: 60 - OTHER SERVICES						
01-23-6005	SURETY BONDS	600.00	600.00	0.00	96.90	503.10
	Category: 60 - OTHER SERVICES Total:	**600.00**	**600.00**	**0.00**	**96.90**	**503.10**
Category: 97 - INTERFUND ACTIVITY						
01-23-9772	TECHNOLOGY USER FEE	54,825.00	54,825.00	54,825.00	54,825.00	0.00
	Category: 97 - INTERFUND ACTIVITY Total:	**54,825.00**	**54,825.00**	**54,825.00**	**54,825.00**	**0.00**
	Department: 23 - COMMUNICATIONS Total:	**827,625.99**	**827,625.99**	**119,758.98**	**715,211.45**	**112,414.54**

REGULAR SESSION CITY COUNCIL MEETING PACKET FOR THE MEETING TO BE HELD ON SEPTEMBER 20, 2021

		Original Total Budget	Current Total Budget	MTD Activity	YTD Activity	Budget Remaining
Department: 25 - FIRE DEPARTMENT						
Category: 30 - SALARIES, WAGES, & BENEFITS						
01-25-3001	SALARIES	613,680.70	830,100.96	62,523.04	700,687.39	129,413.57
01-25-3002	WAGES	57,751.00	57,751.00	3,623.46	36,837.59	20,913.41
01-25-3003	LONGEVITY	2,880.02	2,880.02	217.88	2,417.88	462.14
01-25-3007	OVERTIME	87,666.68	133,000.00	10,076.40	149,324.40	-16,324.40
01-25-3009	VOLUNTEERS STIPEND	44,000.00	44,000.00	2,279.00	28,538.17	15,461.83
01-25-3010	INCENTIVES	21,000.00	21,000.00	1,015.32	10,665.95	10,334.05
01-25-3051	FICA/MEDICARE TAXES	64,498.67	79,777.15	5,921.21	69,171.42	10,605.73
01-25-3052	WORKMEN'S COMPENSATION	29,010.00	29,010.00	0.00	21,752.62	7,257.38
01-25-3053	EMPLOYMENT TAXES	1,584.00	2,160.00	178.58	8,003.53	-5,843.53
01-25-3054	RETIREMENT	89,513.53	119,899.05	10,314.40	121,054.50	-1,155.45
01-25-3055	HEALTH INSURANCE	123,404.06	204,845.42	11,882.04	122,191.36	82,654.06
01-25-3056	LIFE INS	563.68	845.52	76.05	702.00	143.52
01-25-3057	DENTAL INSURANCE	7,863.96	12,504.44	852.88	8,535.45	3,968.99
01-25-3058	LONG-TERM DISABILITY	2,577.45	3,486.41	262.56	2,942.64	543.77
01-25-3059	FIREFIGHTERS' RETIREMENT	26,000.00	26,000.00	0.00	24,675.50	1,324.50
	Category: 30 - SALARIES, WAGES, & BENEFITS Total:	**1,171,993.75**	**1,567,259.97**	**109,222.82**	**1,307,500.40**	**259,759.57**
Category: 35 - SUPPLIES						
01-25-3502	SHIPPING/FREIGHT CHARGES	500.00	500.00	0.00	24.21	475.79
01-25-3503	OFFICE SUPPLIES	6,999.00	6,999.00	0.00	1,487.39	5,511.61
01-25-3504	WEARING APPAREL	46,350.00	46,350.00	1,669.50	40,707.66	5,642.34
01-25-3505	FIRE PREVENTION MATERIALS	2,900.00	2,900.00	0.00	29.99	2,870.01
01-25-3508	FILM AND CAMERA SUPPLIES	50.00	50.00	0.00	0.00	50.00
01-25-3510	BOOKS AND PERIODICALS	1,150.00	1,150.00	0.00	318.91	831.09
01-25-3515	MEDICAL SUPPLIES	24,000.00	24,000.00	-7,998.42	14,527.05	9,472.95
01-25-3517	JANITORIAL SUPPLIES	1,400.00	1,400.00	0.00	1,041.63	358.37
01-25-3520	FOOD	8,999.00	8,999.00	0.00	1,118.64	7,880.36
01-25-3523	TOOLS/EQUIPMENT	61,000.00	61,000.00	-6,093.34	43,869.54	17,130.46
01-25-3524	FEMA SUPPLIES	5,000.00	5,000.00	0.00	13,217.52	-8,217.52
01-25-3525	FEMA EQUIPMENT	5,000.00	5,000.00	0.00	9,286.35	-4,286.35
	Category: 35 - SUPPLIES Total:	**163,348.00**	**163,348.00**	**-12,422.26**	**125,628.89**	**37,719.11**
Category: 45 - MAINTENANCE						
01-25-4501	FURN, FIXT, & OFFICE EQPT.	4,700.00	4,700.00	133.78	3,727.85	972.15
01-25-4503	RADIO AND RADAR EQUIPMENT	2,500.00	2,500.00	0.00	1,726.96	773.04
01-25-4599	MAINTENANCE-MISC EQUIPMENT	34,749.00	34,749.00	0.00	40,563.95	-5,814.95
	Category: 45 - MAINTENANCE Total:	**41,949.00**	**41,949.00**	**133.78**	**46,018.76**	**-4,069.76**
Category: 50 - SERVICES						
01-25-5012	PRINTING	750.00	750.00	0.00	361.99	388.01
01-25-5014	MEDICAL EXPENSES	1,000.00	1,000.00	0.00	0.00	1,000.00
01-25-5020	COMMUNICATIONS	5,000.00	5,000.00	65.50	1,162.10	3,837.90
01-25-5024	RADIO USAGE FEES	15,000.00	15,000.00	1,062.50	11,862.50	3,137.50
01-25-5027	MEMBERSHIPS	3,115.00	3,115.00	381.90	2,375.90	739.10
01-25-5029	TRAVEL/TRAINING	20,000.00	20,000.00	0.00	13,154.97	6,845.03
	Category: 50 - SERVICES Total:	**44,865.00**	**44,865.00**	**1,509.90**	**28,917.46**	**15,947.54**
Category: 54 - SUNDRY						
01-25-5405	LICENSES/PERMITS	1,299.00	1,299.00	0.00	0.00	1,299.00
	Category: 54 - SUNDRY Total:	**1,299.00**	**1,299.00**	**0.00**	**0.00**	**1,299.00**
Category: 55 - PROFESSIONAL SERVICES						
01-25-5508	MEDICAL AND OTHER WASTE-DISP	1,300.00	1,300.00	56.65	728.77	571.23
01-25-5512	ACCIDENT INSURANCE	5,300.00	5,300.00	0.00	0.00	5,300.00
01-25-5516	COLLECTION AGENCY FEES	48,000.00	48,000.00	2,547.18	31,513.55	16,486.45
	Category: 55 - PROFESSIONAL SERVICES Total:	**54,600.00**	**54,600.00**	**2,603.83**	**32,242.32**	**22,357.68**
Category: 65 - CAPITAL OUTLAY						
01-25-6581	RADIO/RADER EQUIPMENT	0.00	0.00	0.00	3.49	-3.49
	Category: 65 - CAPITAL OUTLAY Total:	**0.00**	**0.00**	**0.00**	**3.49**	**-3.49**

REGULAR SESSION CITY COUNCIL MEETING PACKET FOR THE MEETING TO BE HELD ON SEPTEMBER 20, 2021

		Original Total Budget	Current Total Budget	MTD Activity	YTD Activity	Budget Remaining
Category: 97 - INTERFUND ACTIVITY						
01-25-9772	TECHNOLOGY USER FEE	96,373.00	96,373.00	96,373.00	96,373.00	0.00
01-25-9781	EQUIP. PURCHASE CONTRIBUTION	49,575.00	49,575.00	49,575.00	49,575.00	0.00
01-25-9791	EQUIPMENT USER FEE	378,581.00	378,581.00	378,581.00	378,581.00	0.00
	Category: 97 - INTERFUND ACTIVITY Total:	**524,529.00**	**524,529.00**	**524,529.00**	**524,529.00**	**0.00**
	Department: 25 - FIRE DEPARTMENT Total:	**2,002,583.75**	**2,397,849.97**	**625,577.07**	**2,064,840.32**	**333,009.65**

REGULAR SESSION CITY COUNCIL MEETING PACKET FOR THE MEETING TO BE HELD ON SEPTEMBER 20, 2021

		Original Total Budget	Current Total Budget	MTD Activity	YTD Activity	Budget Remaining
Department: 30 - PUBLIC WORKS						
Category: 30 - SALARIES, WAGES, & BENEFITS						
01-30-3001	SALARIES	168,975.53	168,975.53	12,768.80	144,329.19	24,646.34
01-30-3003	LONGEVITY	239.98	239.98	25.86	282.11	-42.13
01-30-3007	OVERTIME	1,000.00	1,000.00	0.00	49.92	950.08
01-30-3051	FICA/MEDICARE TAXES	12,726.58	12,726.58	961.99	10,875.17	1,851.41
01-30-3052	WORKMEN'S COMPENSATION	2,807.00	2,807.00	0.00	2,104.78	702.22
01-30-3053	EMPLOYMENT TAXES	288.00	288.00	1.02	802.23	-514.23
01-30-3054	RETIREMENT	23,757.85	23,757.85	1,787.42	20,308.19	3,449.66
01-30-3055	HEALTH INSURANCE	14,898.00	14,898.00	1,123.89	12,830.85	2,067.15
01-30-3056	LIFE INS	140.92	140.92	11.70	128.70	12.22
01-30-3057	DENTAL INSURANCE	903.24	903.24	69.48	791.72	111.52
01-30-3058	LONG-TERM DISABILITY	709.70	709.70	53.63	606.22	103.48
	Category: 30 - SALARIES, WAGES, & BENEFITS Total:	**226,446.80**	**226,446.80**	**16,803.79**	**193,109.08**	**33,337.72**
Category: 35 - SUPPLIES						
01-30-3502	POSTAGE/FREIGHT/DEL. FEE	100.00	100.00	10.00	26.50	73.50
01-30-3503	OFFICE SUPPLIES	1,500.00	1,500.00	0.00	2,184.40	-684.40
01-30-3504	WEARING APPAREL	500.00	500.00	76.00	302.75	197.25
01-30-3510	BOOKS AND PERIODICALS	100.00	100.00	0.00	0.00	100.00
01-30-3520	FOOD	2,500.00	2,500.00	0.00	1,031.00	1,469.00
	Category: 35 - SUPPLIES Total:	**4,700.00**	**4,700.00**	**86.00**	**3,544.65**	**1,155.35**
Category: 45 - MAINTENANCE						
01-30-4501	FURNITURE AND EQUIPMENT	100.00	100.00	0.00	0.00	100.00
	Category: 45 - MAINTENANCE Total:	**100.00**	**100.00**	**0.00**	**0.00**	**100.00**
Category: 50 - SERVICES						
01-30-5012	PRINTING	300.00	300.00	0.00	137.11	162.89
01-30-5020	COMMUNICATIONS	2,000.00	2,000.00	65.50	935.27	1,064.73
01-30-5027	MEMBERSHIPS	350.00	350.00	0.00	150.00	200.00
01-30-5029	TRAVEL/TRAINING	2,000.00	2,000.00	0.00	555.40	1,444.60
	Category: 50 - SERVICES Total:	**4,650.00**	**4,650.00**	**65.50**	**1,777.78**	**2,872.22**
Category: 55 - PROFESSIONAL SERVICES						
01-30-5510	ENGINEERING SERVICES	10,000.00	10,000.00	360.00	9,398.06	601.94
01-30-5515	CONSULTANT SERVICES	10,000.00	10,000.00	0.00	13,235.25	-3,235.25
	Category: 55 - PROFESSIONAL SERVICES Total:	**20,000.00**	**20,000.00**	**360.00**	**22,633.31**	**-2,633.31**
Category: 97 - INTERFUND ACTIVITY						
01-30-9772	TECHNOLOGY USER FEE	1,875.00	1,875.00	1,875.00	1,875.00	0.00
01-30-9781	EQUIPMENT PURCHASE CONTRIBUTIO	39,250.00	39,250.00	39,250.00	39,250.00	0.00
	Category: 97 - INTERFUND ACTIVITY Total:	**41,125.00**	**41,125.00**	**41,125.00**	**41,125.00**	**0.00**
	Department: 30 - PUBLIC WORKS Total:	**297,021.80**	**297,021.80**	**58,440.29**	**262,189.82**	**34,831.98**

REGULAR SESSION CITY COUNCIL MEETING PACKET FOR THE MEETING TO BE HELD ON SEPTEMBER 20, 2021

		Original Total Budget	Current Total Budget	MTD Activity	YTD Activity	Budget Remaining
Department: 31 - COMMUNITY DEVELOPMENT						
Category: 30 - SALARIES, WAGES, & BENEFITS						
01-31-3001	SALARIES	251,248.13	246,258.13	8,000.73	184,600.94	61,657.19
01-31-3002	WAGES	0.00	4,990.00	0.00	0.00	4,990.00
01-31-3003	LONGEVITY	1,775.80	1,775.80	14.76	960.00	815.80
01-31-3007	OVERTIME	1,000.00	1,000.00	168.98	493.17	506.83
01-31-3010	INCENTIVES	479.96	479.96	36.92	712.19	-232.23
01-31-3051	FICA/MEDICARE TAXES	18,367.48	18,367.48	574.05	13,543.46	4,824.02
01-31-3052	WORKMEN'S COMPENSATION	1,100.00	1,100.00	0.00	824.81	275.19
01-31-3053	EMPLOYMENT TAXES	576.00	576.00	1.34	1,686.09	-1,110.09
01-31-3054	RETIREMENT	35,732.35	35,732.35	1,148.53	26,234.17	9,498.18
01-31-3055	HEALTH INSURANCE	55,618.68	55,618.68	2,612.40	34,983.97	20,634.71
01-31-3056	LIFE INS	281.84	281.84	11.70	204.75	77.09
01-31-3057	DENTAL INSURANCE	3,223.48	3,223.48	178.48	2,299.11	924.37
01-31-3058	LONG-TERM DISABILITY	1,059.44	1,059.44	33.60	775.34	284.10
	Category: 30 - SALARIES, WAGES, & BENEFITS Total:	**370,463.16**	**370,463.16**	**12,781.49**	**267,318.00**	**103,145.16**
Category: 35 - SUPPLIES						
01-31-3503	OFFICE SUPPLIES	3,500.00	3,500.00	0.00	1,383.21	2,116.79
01-31-3504	WEARING APPAREL	900.00	900.00	116.00	160.99	739.01
01-31-3510	BOOKS AND PERIODICALS	700.00	700.00	0.00	0.00	700.00
01-31-3521	ANIMAL SHELTER	3,000.00	3,000.00	0.00	900.00	2,100.00
01-31-3523	TOOLS/EQUIPMENT	300.00	300.00	0.00	0.00	300.00
	Category: 35 - SUPPLIES Total:	**8,400.00**	**8,400.00**	**116.00**	**2,444.20**	**5,955.80**
Category: 50 - SERVICES						
01-31-5008	ABATEMENT/SUBSTANDARD PROPERTY	100.00	100.00	0.00	0.00	100.00
01-31-5012	PRINTING	600.00	600.00	0.00	302.21	297.79
01-31-5020	COMMUNICATIONS	4,500.00	4,500.00	65.50	919.97	3,580.03
01-31-5027	MEMBERSHIPS	900.00	900.00	0.00	0.00	900.00
01-31-5029	TRAVEL/TRAINING	7,500.00	7,500.00	0.00	0.00	7,500.00
	Category: 50 - SERVICES Total:	**13,600.00**	**13,600.00**	**65.50**	**1,222.18**	**12,377.82**
Category: 54 - SUNDRY						
01-31-5405	PERMITS AND FEES	0.00	0.00	0.00	68.45	-68.45
	Category: 54 - SUNDRY Total:	**0.00**	**0.00**	**0.00**	**68.45**	**-68.45**
Category: 55 - PROFESSIONAL SERVICES						
01-31-5515	CONSULTANT	50,000.00	50,000.00	7,417.00	60,445.84	-10,445.84
	Category: 55 - PROFESSIONAL SERVICES Total:	**50,000.00**	**50,000.00**	**7,417.00**	**60,445.84**	**-10,445.84**
Category: 65 - CAPITAL OUTLAY						
01-31-6571	OFFICE FURNITURE & EQUIPMENT	600.00	600.00	0.00	583.24	16.76
	Category: 65 - CAPITAL OUTLAY Total:	**600.00**	**600.00**	**0.00**	**583.24**	**16.76**
Category: 97 - INTERFUND ACTIVITY						
01-31-9771	TECHNOLOGY PURCHASE CONTRIBUTI	1,000.00	1,000.00	1,000.00	1,000.00	0.00
01-31-9772	TECHNOLOGY USER FEE	4,750.00	4,750.00	4,750.00	4,750.00	0.00
01-31-9781	EQUIP. PURCHASE CONTRIBUTION	55,080.00	55,080.00	55,080.00	55,080.00	0.00
	Category: 97 - INTERFUND ACTIVITY Total:	**60,830.00**	**60,830.00**	**60,830.00**	**60,830.00**	**0.00**
	Department: 31 - COMMUNITY DEVELOPMENT Total:	**503,893.16**	**503,893.16**	**81,209.99**	**392,911.91**	**110,981.25**

REGULAR SESSION CITY COUNCIL MEETING PACKET FOR THE MEETING TO BE HELD ON SEPTEMBER 20, 2021

		Original Total Budget	Current Total Budget	MTD Activity	YTD Activity	Budget Remaining
Department: 32 - STREETS						
Category: 30 - SALARIES, WAGES, & BENEFITS						
01-32-3001	SALARIES	158,734.88	158,734.88	9,899.76	117,422.07	41,312.81
01-32-3003	LONGEVITY	1,343.94	1,343.94	11.08	151.23	1,192.71
01-32-3007	OVERTIME	20,000.00	20,000.00	1,349.18	15,290.35	4,709.65
01-32-3010	INCENTIVES	0.01	0.01	36.92	239.98	-239.97
01-32-3051	FICA/MEDICARE TAXES	12,856.20	12,856.20	790.54	9,495.89	3,360.31
01-32-3052	WORKMEN'S COMPENSATION	5,658.00	5,658.00	0.00	4,242.55	1,415.45
01-32-3053	EMPLOYMENT TAXES	576.00	576.00	2.04	1,468.98	-892.98
01-32-3054	RETIREMENT	25,283.07	25,283.07	1,578.19	18,686.23	6,596.84
01-32-3055	HEALTH INSURANCE	54,989.48	54,989.48	3,688.82	34,776.90	20,212.58
01-32-3056	LIFE INS	211.38	211.38	17.55	157.95	53.43
01-32-3057	DENTAL	3,480.36	3,480.36	267.72	2,613.84	866.52
01-32-3058	LONG-TERM DISABILITY	666.69	666.69	41.58	493.21	173.48
	Category: 30 - SALARIES, WAGES, & BENEFITS Total:	**283,800.01**	**283,800.01**	**17,683.38**	**205,039.18**	**78,760.83**
Category: 35 - SUPPLIES						
01-32-3504	WEARING APPAREL	1,600.00	1,600.00	60.00	1,573.21	26.79
01-32-3523	TOOLS/EQUIPMENT	3,000.00	3,000.00	152.12	2,981.38	18.62
01-32-3534	PARTS AND MATERIALS	90,000.00	90,000.00	2,035.88	89,123.11	876.89
	Category: 35 - SUPPLIES Total:	**94,600.00**	**94,600.00**	**2,248.00**	**93,677.70**	**922.30**
Category: 40 - MAINTENANCE--BLDGS, STRUC						
01-32-4002	STREET SIGNS	10,000.00	10,000.00	0.00	8,516.60	1,483.40
01-32-4003	STREET MAINTENANCE MAT'L	25,000.00	25,000.00	14,371.80	27,558.70	-2,558.70
01-32-4004	SIDEWALK REPLACEMENT	25,000.00	25,000.00	0.00	14,676.00	10,324.00
	Category: 40 - MAINTENANCE--BLDGS, STRUC Total:	**60,000.00**	**60,000.00**	**14,371.80**	**50,751.30**	**9,248.70**
Category: 45 - MAINTENANCE						
01-32-4598	ORNMNTL STREET LIGHT MAIN	1,000.00	1,000.00	0.00	0.00	1,000.00
	Category: 45 - MAINTENANCE Total:	**1,000.00**	**1,000.00**	**0.00**	**0.00**	**1,000.00**
Category: 50 - SERVICES						
01-32-5016	STREET LIGHTING	195,000.00	195,000.00	11,736.77	132,453.22	62,546.78
01-32-5020	COMMUNICATIONS	3,000.00	3,000.00	65.50	2,745.15	254.85
01-32-5022	RENTAL OF EQUIPMENT	1,000.00	1,000.00	0.00	0.00	1,000.00
01-32-5029	TRAVEL/TRAINING	5,000.00	5,000.00	382.78	2,025.22	2,974.78
	Category: 50 - SERVICES Total:	**204,000.00**	**204,000.00**	**12,185.05**	**137,223.59**	**66,776.41**
Category: 55 - PROFESSIONAL SERVICES						
01-32-5507	MOSQUITO SPRAYING	16,000.00	16,000.00	2,600.00	12,150.00	3,850.00
01-32-5515	CONSULTANT SERVICES	5,000.00	5,000.00	0.00	0.00	5,000.00
	Category: 55 - PROFESSIONAL SERVICES Total:	**21,000.00**	**21,000.00**	**2,600.00**	**12,150.00**	**8,850.00**
Category: 97 - INTERFUND ACTIVITY						
01-32-9772	TECHNOLOGY USER FEE	500.00	500.00	500.00	500.00	0.00
01-32-9781	EQUIPMENT PURCHASE CONTRIBUTIO	84,335.00	84,335.00	84,335.00	84,335.00	0.00
01-32-9791	EQUIPMENT USER FEE	30,000.00	30,000.00	30,000.00	30,000.00	0.00
	Category: 97 - INTERFUND ACTIVITY Total:	**114,835.00**	**114,835.00**	**114,835.00**	**114,835.00**	**0.00**
	Department: 32 - STREETS Total:	**779,235.01**	**779,235.01**	**163,923.23**	**613,676.77**	**165,558.24**

REGULAR SESSION CITY COUNCIL MEETING PACKET FOR THE MEETING TO BE HELD ON SEPTEMBER 20, 2021

		Original Total Budget	Current Total Budget	MTD Activity	YTD Activity	Budget Remaining
Department: 33 - BUILDING MAINTENANCE						
Category: 30 - SALARIES, WAGES, & BENEFITS						
01-33-3001	SALARIES	56,752.12	56,752.12	4,302.94	48,584.73	8,167.39
01-33-3002	WAGES	24,000.00	24,000.00	1,914.00	12,274.44	11,725.56
01-33-3003	LONGEVITY	48.10	48.10	11.08	87.80	-39.70
01-33-3007	OVERTIME	5,000.00	5,000.00	0.00	827.08	4,172.92
01-33-3051	FICA/MEDICARE TAXES	6,445.33	6,445.33	467.34	4,621.95	1,823.38
01-33-3052	WORKMEN'S COMPENSATION	1,382.00	1,382.00	0.00	1,040.77	341.23
01-33-3053	EMPLOYMENT TAXES	288.00	288.00	54.71	830.18	-542.18
01-33-3054	RETIREMENT	8,676.75	8,676.75	602.67	6,948.69	1,728.06
01-33-3055	HEALTH INSURANCE	7,449.00	7,449.00	561.95	6,415.42	1,033.58
01-33-3056	LIFE INS	70.46	70.46	5.85	64.35	6.11
01-33-3057	DENTAL	1,160.12	1,160.12	89.24	1,016.89	143.23
01-33-3058	LONG-TERM DISABILITY	259.36	259.36	18.07	203.98	55.38
	Category: 30 - SALARIES, WAGES, & BENEFITS Total:	**111,531.24**	**111,531.24**	**8,027.85**	**82,916.28**	**28,614.96**
Category: 35 - SUPPLIES						
01-33-3504	WEARING APPAREL	1,000.00	1,000.00	54.00	269.34	730.66
01-33-3517	JANITORIAL SUPPLIES	7,500.00	7,500.00	0.00	3,021.21	4,478.79
01-33-3520	FOOD	0.00	0.00	0.00	138.90	-138.90
01-33-3523	TOOLS/EQUIPMENT	750.00	750.00	0.00	430.86	319.14
01-33-3540	POWERED EQUIPMENT	1,200.00	1,200.00	0.00	0.00	1,200.00
01-33-3541	SAFETY PRODUCTS	750.00	750.00	0.00	600.40	149.60
01-33-3542	FIRST AID	250.00	250.00	0.00	0.00	250.00
01-33-3543	SECURITY SUPPLIES	4,000.00	4,000.00	0.00	327.58	3,672.42
	Category: 35 - SUPPLIES Total:	**15,450.00**	**15,450.00**	**54.00**	**4,788.29**	**10,661.71**
Category: 40 - MAINTENANCE--BLDGS, STRUC						
01-33-4001	MAINTENANCE-BLDG & GROUNDS	2,000.00	2,000.00	0.00	2,067.93	-67.93
01-33-4002	MAINT-INSURED REPAIRS	0.00	0.00	0.00	1,480.00	-1,480.00
01-33-4011	CITY HALL/CIVIC CENTER BUILDING MAINTEN...	7,000.00	7,000.00	0.00	3,441.00	3,559.00
01-33-4021	POLICE DEPARTMENT BUILDING MAINTENAN...	10,000.00	10,000.00	1,054.00	12,854.09	-2,854.09
01-33-4025	FIRE DEPARTMENT BUILDING MAINTENANCE	10,000.00	10,000.00	7,870.00	10,000.00	0.00
01-33-4030	PUBLIC WORKS BULDING MAINTENANCE	1,500.00	1,500.00	0.00	2,642.70	-1,142.70
	Category: 40 - MAINTENANCE--BLDGS, STRUC Total:	**30,500.00**	**30,500.00**	**8,924.00**	**32,485.72**	**-1,985.72**
Category: 45 - MAINTENANCE						
01-33-4501	FURN.,FIXT.,& OFF. MACH.	1,000.00	1,000.00	0.00	130.96	869.04
	Category: 45 - MAINTENANCE Total:	**1,000.00**	**1,000.00**	**0.00**	**130.96**	**869.04**
Category: 50 - SERVICES						
01-33-5017	UTILITIES	103,000.00	103,000.00	7,762.72	73,985.84	29,014.16
01-33-5029	TRAVEL AND TRAINING	1,000.00	1,000.00	0.00	81.49	918.51
	Category: 50 - SERVICES Total:	**104,000.00**	**104,000.00**	**7,762.72**	**74,067.33**	**29,932.67**
Category: 55 - PROFESSIONAL SERVICES						
01-33-5521	PEST CONTROL SERVICES	5,000.00	5,000.00	0.00	990.76	4,009.24
01-33-5529	CONTRACTUAL SERVICES	5,000.00	5,000.00	0.00	0.00	5,000.00
01-33-5530	PROFESSIONAL SERVICES	5,000.00	5,000.00	0.00	0.00	5,000.00
	Category: 55 - PROFESSIONAL SERVICES Total:	**15,000.00**	**15,000.00**	**0.00**	**990.76**	**14,009.24**
Category: 65 - CAPITAL OUTLAY						
01-33-6580	BLDG & GROUND IMPROVEMENT	65,500.00	65,500.00	0.00	49,937.96	15,562.04
	Category: 65 - CAPITAL OUTLAY Total:	**65,500.00**	**65,500.00**	**0.00**	**49,937.96**	**15,562.04**
Category: 97 - INTERFUND ACTIVITY						
01-33-9781	EQUIPMENT PURCHASE CONTRIBUTIO	27,320.00	27,320.00	27,320.00	27,320.00	0.00
	Category: 97 - INTERFUND ACTIVITY Total:	**27,320.00**	**27,320.00**	**27,320.00**	**27,320.00**	**0.00**
	Department: 33 - BUILDING MAINTENANCE Total:	**370,301.24**	**370,301.24**	**52,088.57**	**272,637.30**	**97,663.94**

REGULAR SESSION CITY COUNCIL MEETING PACKET FOR THE MEETING TO BE HELD ON SEPTEMBER 20, 2021

		Original Total Budget	Current Total Budget	MTD Activity	YTD Activity	Budget Remaining
Department: 35 - SOLID WASTE						
Category: 55 - PROFESSIONAL SERVICES						
01-35-5508	SOLID WASTECOLLECTION SERVICES	364,324.00	364,324.00	30,307.49	295,321.34	69,002.66
01-35-5509	STORM CLEAN-UP-DEBRIS REMOVAL	2,900.00	2,900.00	0.00	0.00	2,900.00
01-35-5519	RECYCLING PROGRAM	99,702.00	99,702.00	7,869.54	78,695.40	21,006.60
	Category: 55 - PROFESSIONAL SERVICES Total:	**466,926.00**	**466,926.00**	**38,177.03**	**374,016.74**	**92,909.26**
	Department: 35 - SOLID WASTE Total:	**466,926.00**	**466,926.00**	**38,177.03**	**374,016.74**	**92,909.26**

REGULAR SESSION CITY COUNCIL MEETING PACKET FOR THE MEETING TO BE HELD ON SEPTEMBER 20, 2021

		Original Total Budget	Current Total Budget	MTD Activity	YTD Activity	Budget Remaining
Department: 36 - FLEET SERVICES						
Category: 30 - SALARIES, WAGES, & BENEFITS						
01-36-3001	SALARIES	123,466.72	123,466.72	9,495.76	105,973.93	17,492.79
01-36-3003	LONGEVITY	335.92	335.92	36.92	383.66	-47.74
01-36-3007	OVERTIME	8,000.00	8,000.00	643.09	10,902.31	-2,902.31
01-36-3010	INCENTIVES	600.08	600.08	46.16	525.99	74.09
01-36-3051	FICA/MEDICARE TAXES	9,801.41	9,801.41	756.79	8,724.04	1,077.37
01-36-3052	WORKMEN'S COMPENSATION	2,246.00	2,246.00	0.00	1,684.12	561.88
01-36-3053	EMPLOYMENT TAXES	416.00	416.00	1.85	813.26	-397.26
01-36-3054	RETIREMENT	18,665.16	18,665.16	1,433.82	16,600.64	2,064.52
01-36-3055	HEALTH INSURANCE	20,244.90	20,244.90	1,527.26	17,383.05	2,861.85
01-36-3056	LIFE INS	140.92	140.92	11.70	128.70	12.22
01-36-3057	DENTAL	1,611.74	1,611.74	123.98	1,410.15	201.59
01-36-3058	LONG-TERM DISABILITY	520.82	520.82	40.06	447.00	73.82
	Category: 30 - SALARIES, WAGES, & BENEFITS Total:	**186,049.67**	**186,049.67**	**14,117.39**	**164,976.85**	**21,072.82**
Category: 35 - SUPPLIES						
01-36-3503	OFFICE SUPPLIES	500.00	500.00	0.00	364.95	135.05
01-36-3504	WEARING APPAREL	800.00	800.00	0.00	657.58	142.42
01-36-3510	MANUALS AND PERIODICALS	1,000.00	1,000.00	0.00	663.33	336.67
01-36-3514	FUEL AND OIL	135,000.00	135,000.00	12,020.26	108,956.48	26,043.52
01-36-3523	TOOLS/EQUIPMENT	12,500.00	12,500.00	44.97	12,461.39	38.61
01-36-3529	VEHICLE REPAIR PARTS	40,000.00	40,000.00	4,166.97	40,349.50	-349.50
01-36-3535	SHOP SUPPLIES	5,000.00	5,000.00	91.41	5,162.46	-162.46
	Category: 35 - SUPPLIES Total:	**194,800.00**	**194,800.00**	**16,323.61**	**168,615.69**	**26,184.31**
Category: 45 - MAINTENANCE						
01-36-4520	AUTO REPAIR/OUTSOURCED	55,000.00	55,000.00	16,256.79	47,139.04	7,860.96
	Category: 45 - MAINTENANCE Total:	**55,000.00**	**55,000.00**	**16,256.79**	**47,139.04**	**7,860.96**
Category: 50 - SERVICES						
01-36-5020	COMMUNICATIONS	1,500.00	1,500.00	41.54	1,344.79	155.21
01-36-5022	RENTAL EQUIPMENT	360.00	360.00	0.00	0.00	360.00
01-36-5027	MEMBERSHIP	750.00	750.00	0.00	804.00	-54.00
01-36-5029	TRAVEL/TRAINING	7,800.00	7,800.00	0.00	4,244.99	3,555.01
	Category: 50 - SERVICES Total:	**10,410.00**	**10,410.00**	**41.54**	**6,393.78**	**4,016.22**
Category: 54 - SUNDRY						
01-36-5405	LICENSES/PERMITS	850.00	850.00	0.00	1,116.85	-266.85
	Category: 54 - SUNDRY Total:	**850.00**	**850.00**	**0.00**	**1,116.85**	**-266.85**
Category: 65 - CAPITAL OUTLAY						
01-36-6572	SPECIAL EQUIPMENT	5,000.00	5,000.00	98.85	3,665.09	1,334.91
01-36-6574	COMPUTER SOFTWARE	3,500.00	3,500.00	0.00	5,098.75	-1,598.75
01-36-6580	VEHICLES	0.00	0.00	0.00	615.97	-615.97
	Category: 65 - CAPITAL OUTLAY Total:	**8,500.00**	**8,500.00**	**98.85**	**9,379.81**	**-879.81**
Category: 97 - INTERFUND ACTIVITY						
01-36-9757	VEH/EQUIP PURCHASE CONTRIB	54,640.00	54,640.00	54,640.00	54,640.00	0.00
01-36-9772	TECHNOLOGY USER FEE	1,000.00	1,000.00	1,000.00	1,000.00	0.00
	Category: 97 - INTERFUND ACTIVITY Total:	**55,640.00**	**55,640.00**	**55,640.00**	**55,640.00**	**0.00**
	Department: 36 - FLEET SERVICES Total:	**511,249.67**	**511,249.67**	**102,478.18**	**453,262.02**	**57,987.65**

REGULAR SESSION CITY COUNCIL MEETING PACKET FOR THE MEETING TO BE HELD ON SEPTEMBER 20, 2021

		Original Total Budget	Current Total Budget	MTD Activity	YTD Activity	Budget Remaining
Department: 38 - RECREATION						
Category: 30 - SALARIES, WAGES, & BENEFITS						
01-38-3001	SALARIES	58,349.60	58,349.60	4,534.60	51,886.42	6,463.18
01-38-3002	WAGES	59,000.00	59,000.00	13,444.26	47,881.94	11,118.06
01-38-3003	LONGEVITY	48.10	48.10	7.38	79.35	-31.25
01-38-3007	OVERTIME	0.00	0.00	319.04	539.83	-539.83
01-38-3051	FICA/MEDICARE TAXES	8,661.49	8,661.49	1,372.32	7,356.68	1,304.81
01-38-3053	EMPLOYMENT TAXES	288.00	288.00	388.46	2,375.99	-2,087.99
01-38-3054	RETIREMENT	8,283.29	8,283.29	634.52	7,295.74	987.55
01-38-3055	HEALTH INSURANCE	20,360.34	20,360.34	1,535.97	17,670.51	2,689.83
01-38-3056	LIFE INS	70.46	70.46	5.85	64.35	6.11
01-38-3057	DENTAL	1,160.12	1,160.12	89.24	1,026.26	133.86
01-38-3058	LONG-TERM DISABILITY	247.59	247.59	19.04	217.88	29.71
	Category: 30 - SALARIES, WAGES, & BENEFITS Total:	**156,468.99**	**156,468.99**	**22,350.68**	**136,394.95**	**20,074.04**
Category: 35 - SUPPLIES						
01-38-3503	OFFICE SUPPLIES	500.00	500.00	0.00	315.66	184.34
01-38-3504	WEARING APPAREL	1,000.00	1,000.00	0.00	1,747.17	-747.17
01-38-3506	CHEMICALS	500.00	500.00	0.00	0.00	500.00
01-38-3517	JANITORIAL SUPPLIES	300.00	300.00	0.00	79.96	220.04
01-38-3523	TOOLS/EQUIPMENT	250.00	250.00	0.00	1,031.76	-781.76
01-38-3526	MINOR EQUIPMENT	250.00	250.00	0.00	0.00	250.00
01-38-3531	RECREATION & EVENTS	1,000.00	1,000.00	0.00	1,141.78	-141.78
01-38-3532	RECREATION AWARDS/PRIZES	1,000.00	1,000.00	0.00	957.71	42.29
01-38-3542	FIRST AID	250.00	250.00	0.00	79.17	170.83
01-38-3547	POOL SUPPLIES	2,500.00	2,500.00	0.00	4,029.75	-1,529.75
	Category: 35 - SUPPLIES Total:	**7,550.00**	**7,550.00**	**0.00**	**9,382.96**	**-1,832.96**
Category: 45 - MAINTENANCE						
01-38-4512	EQUIPMENT MAINTENANCE	500.00	500.00	0.00	2,080.08	-1,580.08
	Category: 45 - MAINTENANCE Total:	**500.00**	**500.00**	**0.00**	**2,080.08**	**-1,580.08**
Category: 50 - SERVICES						
01-38-5012	PRINTING	3,500.00	3,500.00	0.00	2,830.00	670.00
01-38-5020	COMMUNICATIONS	600.08	600.08	0.00	0.00	600.08
01-38-5022	EQUIPMENT RENTAL	750.00	750.00	173.00	173.00	577.00
01-38-5027	MEMBERSHIPS/SUBCRIPTIONS	500.00	500.00	0.00	1,096.85	-596.85
01-38-5029	TRAVEL/TRAINING	1,000.00	1,000.00	0.00	2,337.01	-1,337.01
01-38-5043	GENERAL ADVERTISING	2,000.00	2,000.00	0.00	1,235.86	764.14
01-38-5046	SPRING FLING	2,000.00	2,000.00	0.00	2,325.68	-325.68
01-38-5047	EGG HUNTS	2,500.00	2,500.00	0.00	1,387.88	1,112.12
01-38-5048	FOURTH OF JULY	2,500.00	2,500.00	0.00	3,694.26	-1,194.26
01-38-5049	FALL FROLIC	2,500.00	2,500.00	0.00	0.00	2,500.00
01-38-5050	HOLIDAY IN THE VILLAGE	5,000.00	5,000.00	0.00	2,409.21	2,590.79
01-38-5051	FOOD TRUCK RALLY	3,000.00	3,000.00	0.00	522.51	2,477.49
01-38-5052	CONCERT SERIES	5,000.00	5,000.00	0.00	4,400.00	600.00
01-38-5053	MOVIE SERIES	1,800.00	1,800.00	0.00	1,545.60	254.40
01-38-5054	POOL EVENTS	1,000.00	1,000.00	0.00	889.75	110.25
01-38-5055	RECREATIONAL ACTIVITIES	1,750.00	1,750.00	0.00	4,756.46	-3,006.46
	Category: 50 - SERVICES Total:	**35,400.08**	**35,400.08**	**173.00**	**29,604.07**	**5,796.01**
Category: 55 - PROFESSIONAL SERVICES						
01-38-5530	PROFESSIONAL SERVICES	1,500.00	1,500.00	1,300.00	2,999.84	-1,499.84
	Category: 55 - PROFESSIONAL SERVICES Total:	**1,500.00**	**1,500.00**	**1,300.00**	**2,999.84**	**-1,499.84**
	Department: 38 - RECREATION Total:	**201,419.07**	**201,419.07**	**23,823.68**	**180,461.90**	**20,957.17**

REGULAR SESSION CITY COUNCIL MEETING PACKET FOR THE MEETING TO BE HELD ON SEPTEMBER 20, 2021

		Original Total Budget	Current Total Budget	MTD Activity	YTD Activity	Budget Remaining
Department: 39 - PARKS						
Category: 30 - SALARIES, WAGES, & BENEFITS						
01-39-3001	SALARIES	421,417.19	400,417.19	29,085.96	312,226.92	88,190.27
01-39-3002	WAGES	0.00	0.00	0.00	-74.76	74.76
01-39-3003	LONGEVITY	2,688.14	2,688.14	247.38	2,725.60	-37.46
01-39-3007	OVERTIME	1,800.00	1,800.00	56.55	2,887.35	-1,087.35
01-39-3010	INCENTIVES	0.00	0.00	46.16	525.99	-525.99
01-39-3051	FICA/MEDICARE TAXES	30,840.41	30,840.41	2,144.79	23,184.90	7,655.51
01-39-3052	WORKMEN'S COMPENSATION	8,326.00	8,326.00	0.00	6,243.10	2,082.90
01-39-3053	EMPLOYMENT TAXES	1,180.80	1,180.80	109.38	3,257.53	-2,076.73
01-39-3054	RETIREMENT	44,612.85	44,612.85	4,112.22	44,579.85	33.00
01-39-3055	HEALTH INSURANCE	103,159.16	89,159.16	6,810.57	72,930.86	16,228.30
01-39-3056	LIFE INS	493.22	493.22	35.10	432.33	60.89
01-39-3057	DENTAL	6,252.22	6,252.22	461.18	4,960.97	1,291.25
01-39-3058	LONG-TERM DISABILITY	1,315.72	1,315.72	122.17	1,308.31	7.41
	Category: 30 - SALARIES, WAGES, & BENEFITS Total:	**622,085.71**	**587,085.71**	**43,231.46**	**475,188.95**	**111,896.76**
Category: 35 - SUPPLIES						
01-39-3503	OFFICE SUPPLIES	250.00	250.00	0.00	251.06	-1.06
01-39-3504	WEARING APPAREL	3,000.00	3,000.00	0.00	1,742.15	1,257.85
01-39-3506	CHEMICALS	6,500.00	6,500.00	0.00	0.00	6,500.00
01-39-3517	JANITORIAL SUPPLIES	1,000.00	1,000.00	0.00	511.34	488.66
01-39-3523	TOOLS/EQUIPMENT	1,500.00	1,500.00	287.08	839.90	660.10
01-39-3526	MINOR EQUIPMENT	3,000.00	3,000.00	0.00	441.88	2,558.12
01-39-3534	EQUIP REPAIR PARTS	5,000.00	5,000.00	61.06	2,324.21	2,675.79
01-39-3536	LANDSCAPING MATERIALS	9,500.00	9,500.00	0.00	4,158.65	5,341.35
01-39-3542	FIRST AID	500.00	500.00	0.00	0.00	500.00
01-39-3544	IRRIGATION SUPPLIES	2,000.00	2,000.00	28.39	324.90	1,675.10
01-39-3545	POOL JANITORIAL SUPPLIES	750.00	750.00	0.00	381.08	368.92
01-39-3546	SPLASH PAD CHEMICALS	2,000.00	2,000.00	0.00	1,338.50	661.50
01-39-3547	POOL CHEMICALS	13,000.00	13,000.00	0.00	8,068.60	4,931.40
	Category: 35 - SUPPLIES Total:	**48,000.00**	**48,000.00**	**376.53**	**20,382.27**	**27,617.73**
Category: 40 - MAINTENANCE--BLDGS, STRUC						
01-39-4007	POOL MAINTENANCE	3,000.00	3,000.00	0.00	4,201.25	-1,201.25
01-39-4008	PARK MAINTENANCE	0.00	0.00	389.00	2,542.45	-2,542.45
01-39-4031	SPLASH PAD MAINTENANCE	1,500.00	1,500.00	0.00	2,436.00	-936.00
01-39-4032	CAROL FOX PARK	5,000.00	5,000.00	0.00	5,827.59	-827.59
01-39-4033	CLARK HENRY PARK	5,000.00	5,000.00	24.47	1,308.84	3,691.16
01-39-4034	PHILLIPINE PARK	1,500.00	1,500.00	0.00	0.00	1,500.00
01-39-4035	DOG PARK	2,500.00	2,500.00	0.00	264.78	2,235.22
01-39-4036	OPEN GREEN SPACE/POCKET PARKS	1,000.00	1,000.00	0.00	0.00	1,000.00
01-39-4037	HIKE AND BIKE TRAILS	1,000.00	1,000.00	0.00	0.00	1,000.00
01-39-4038	TREE MAINTENANCE AND TREE CITY USA	1,500.00	1,500.00	0.00	0.00	1,500.00
	Category: 40 - MAINTENANCE--BLDGS, STRUC Total:	**22,000.00**	**22,000.00**	**413.47**	**16,580.91**	**5,419.09**
Category: 45 - MAINTENANCE						
01-39-4511	VEHICLE MAINTENANCE	1,000.00	1,000.00	0.00	334.58	665.42
01-39-4512	EQUIPMENT MAINTENANCE	2,500.00	2,500.00	0.00	0.00	2,500.00
	Category: 45 - MAINTENANCE Total:	**3,500.00**	**3,500.00**	**0.00**	**334.58**	**3,165.42**
Category: 50 - SERVICES						
01-39-5012	PRINTING	1,000.00	1,000.00	0.00	26.05	973.95
01-39-5020	COMMUNICATIONS	1,800.00	1,800.00	65.50	919.97	880.03
01-39-5022	EQUIPMENT RENTAL	1,000.00	1,000.00	0.00	0.00	1,000.00
01-39-5027	MEMBERSHIPS/SUBCRIPTIONS	500.00	500.00	0.00	40.00	460.00
01-39-5029	TRAVEL/TRAINING	2,500.00	2,500.00	0.00	2,639.14	-139.14
	Category: 50 - SERVICES Total:	**6,800.00**	**6,800.00**	**65.50**	**3,625.16**	**3,174.84**
Category: 55 - PROFESSIONAL SERVICES						
01-39-5529	CONTRACTUAL SERVICES	1,000.00	1,000.00	0.00	0.00	1,000.00

REGULAR SESSION CITY COUNCIL MEETING PACKET FOR THE MEETING TO BE HELD ON SEPTEMBER 20, 2021

		Original Total Budget	Current Total Budget	MTD Activity	YTD Activity	Budget Remaining
01-39-5530	PROFESSIONAL SERVICES	1,000.00	1,000.00	0.00	0.00	1,000.00
	Category: 55 - PROFESSIONAL SERVICES Total:	**2,000.00**	**2,000.00**	**0.00**	**0.00**	**2,000.00**
Category: 65 - CAPITAL OUTLAY						
01-39-6516	PARKS & LANDSCAPING PROJS	30,000.00	65,000.00	0.00	34,396.25	30,603.75
01-39-6598	MISCELLANEOUS EQUIPMENT	10,000.00	10,000.00	0.00	2,052.25	7,947.75
	Category: 65 - CAPITAL OUTLAY Total:	**40,000.00**	**75,000.00**	**0.00**	**36,448.50**	**38,551.50**
Category: 97 - INTERFUND ACTIVITY						
01-39-9772	TECHNOLOGY USER FEE	750.00	750.00	750.00	750.00	0.00
01-39-9781	EQUIP. PURCHASE CONTRIBUTION	30,900.00	30,900.00	30,900.00	30,900.00	0.00
01-39-9791	EQUIPMENT USER FEE	11,800.00	11,800.00	11,800.00	11,800.00	0.00
	Category: 97 - INTERFUND ACTIVITY Total:	**43,450.00**	**43,450.00**	**43,450.00**	**43,450.00**	**0.00**
	Department: 39 - PARKS Total:	**787,835.71**	**787,835.71**	**87,536.96**	**596,010.37**	**191,825.34**
	Fund: 01 - GENERAL FUND Surplus (Deficit):	**886,492.45**	**435,104.23**	**-885,174.87**	**4,549,499.62**	

REGULAR SESSION CITY COUNCIL MEETING PACKET FOR THE MEETING TO BE HELD ON SEPTEMBER 20, 2021

		Original Total Budget	Current Total Budget	MTD Activity	YTD Activity	Budget Remaining
Fund: 03 - DEBT SERVICE FUND						
Department: 50 - 50						
Category: 72 - PROPERTY TAXES						
03-50-7201	CURRENT PROPERTY TAXES	1,453,727.00	1,453,727.00	0.00	1,434,249.80	19,477.20
03-50-7202	DELINQUENT PROPERTY TAX	30,000.00	30,000.00	0.00	5,939.34	24,060.66
03-50-7203	PENALTY, INTEREST, COSTS	15,000.00	15,000.00	0.00	6,562.48	8,437.52
	Category: 72 - PROPERTY TAXES Total:	**1,498,727.00**	**1,498,727.00**	**0.00**	**1,446,751.62**	**51,975.38**
Category: 96 - INTEREST EARNED						
03-50-9601	INTEREST EARNED	10,000.00	10,000.00	6.15	138.64	9,861.36
	Category: 96 - INTEREST EARNED Total:	**10,000.00**	**10,000.00**	**6.15**	**138.64**	**9,861.36**
Category: 97 - INTERFUND ACTIVITY						
03-50-9752	TRANSFER FROM UTILITY FUND	88,418.00	88,418.00	88,418.00	88,418.00	0.00
	Category: 97 - INTERFUND ACTIVITY Total:	**88,418.00**	**88,418.00**	**88,418.00**	**88,418.00**	**0.00**
	Department: 50 - 50 Total:	**1,597,145.00**	**1,597,145.00**	**88,424.15**	**1,535,308.26**	**61,836.74**

REGULAR SESSION CITY COUNCIL MEETING PACKET FOR THE MEETING TO BE HELD ON SEPTEMBER 20, 2021

		Original Total Budget	Current Total Budget	MTD Activity	YTD Activity	Budget Remaining
Department: 51 - DEBT SERVICE						
Category: 61 - DEBT SERVICE						
03-51-6121	PRINCIPAL/DEBT SERVICE	1,245,000.00	1,245,000.00	0.00	1,245,000.00	0.00
03-51-6122	INTEREST/DEBT SERVICE	273,325.00	273,325.00	0.00	145,225.00	128,100.00
03-51-6123	MAINTENANCE FEE/DEBT SERVICE	9,000.00	9,000.00	0.00	1,250.00	7,750.00
	Category: 61 - DEBT SERVICE Total:	**1,527,325.00**	**1,527,325.00**	**0.00**	**1,391,475.00**	**135,850.00**
	Department: 51 - DEBT SERVICE Total:	**1,527,325.00**	**1,527,325.00**	**0.00**	**1,391,475.00**	**135,850.00**
	Fund: 03 - DEBT SERVICE FUND Surplus (Deficit):	**69,820.00**	**69,820.00**	**88,424.15**	**143,833.26**	

REGULAR SESSION CITY COUNCIL MEETING PACKET FOR THE MEETING TO BE HELD ON SEPTEMBER 20, 2021

		Original Total Budget	Current Total Budget	MTD Activity	YTD Activity	Budget Remaining
Fund: 05 - MOTEL TAX FUND						
Department: 55 - 55						
Category: 75 - OTHER TAXES						
05-55-7635	MOTEL OCCUPANCY TAX	70,000.00	70,000.00	2,286.38	52,045.43	17,954.57
	Category: 75 - OTHER TAXES Total:	**70,000.00**	**70,000.00**	**2,286.38**	**52,045.43**	**17,954.57**
Category: 96 - INTEREST EARNED						
05-55-9601	INTEREST EARNED	1,200.00	1,200.00	6.09	117.84	1,082.16
	Category: 96 - INTEREST EARNED Total:	**1,200.00**	**1,200.00**	**6.09**	**117.84**	**1,082.16**
	Department: 55 - 55 Total:	**71,200.00**	**71,200.00**	**2,292.47**	**52,163.27**	**19,036.73**

REGULAR SESSION CITY COUNCIL MEETING PACKET FOR THE MEETING TO BE HELD ON SEPTEMBER 20, 2021

		Original Total Budget	Current Total Budget	MTD Activity	YTD Activity	Budget Remaining
Department: 56 - MOTEL TAX						
Category: 50 - SERVICES						
05-56-5043	GENERAL ADVERTISING	7,000.00	7,000.00	0.00	0.00	7,000.00
05-56-5044	ADVERTISING	34,900.00	34,900.00	1,900.00	15,450.00	19,450.00
	Category: 50 - SERVICES Total:	**41,900.00**	**41,900.00**	**1,900.00**	**15,450.00**	**26,450.00**
Category: 97 - INTERFUND ACTIVITY						
05-56-9751	TRANSFER TO GENERAL FUND	19,000.00	19,000.00	19,000.00	19,000.00	0.00
	Category: 97 - INTERFUND ACTIVITY Total:	**19,000.00**	**19,000.00**	**19,000.00**	**19,000.00**	**0.00**
	Department: 56 - MOTEL TAX Total:	**60,900.00**	**60,900.00**	**20,900.00**	**34,450.00**	**26,450.00**
	Fund: 05 - MOTEL TAX FUND Surplus (Deficit):	**10,300.00**	**10,300.00**	**-18,607.53**	**17,713.27**	

REGULAR SESSION CITY COUNCIL MEETING PACKET FOR THE MEETING TO BE HELD ON SEPTEMBER 20, 2021

		Original Total Budget	Current Total Budget	MTD Activity	YTD Activity	Budget Remaining
Fund: 10 - CAPITAL IMPROVEMENTS FUND						
Department: 90 - 90						
Category: 96 - INTEREST EARNED						
10-90-9601	INTEREST EARNED	20,000.00	20,000.00	88.04	3,227.49	16,772.51
	Category: 96 - INTEREST EARNED Total:	**20,000.00**	**20,000.00**	**88.04**	**3,227.49**	**16,772.51**
Category: 97 - INTERFUND ACTIVITY						
10-90-9751	TRFR F/GENERAL FUND	1,080,000.00	1,080,000.00	0.00	0.00	1,080,000.00
	Category: 97 - INTERFUND ACTIVITY Total:	**1,080,000.00**	**1,080,000.00**	**0.00**	**0.00**	**1,080,000.00**
	Department: 90 - 90 Total:	**1,100,000.00**	**1,100,000.00**	**88.04**	**3,227.49**	**1,096,772.51**

REGULAR SESSION CITY COUNCIL MEETING PACKET FOR THE MEETING TO BE HELD ON SEPTEMBER 20, 2021

		Original Total Budget	Current Total Budget	MTD Activity	YTD Activity	Budget Remaining
Department: 91 - 91						
Category: 70 - CAPITAL IMPROVEMENTS						
10-91-7012	E 127 IMPROVEMENTS	0.00	0.00	0.00	405.00	-405.00
10-91-7013	WALL STREET NEIGHBORHOOD DRAINAGE	0.00	0.00	0.00	23,560.00	-23,560.00
10-91-7014	FY 17 -HOME ELEV GRANT ADM SER	0.00	0.00	238,545.35	1,247,010.26	-1,247,010.26
10-91-7016	ELEVATIONS FY 20 GRANT	600,000.00	600,000.00	0.00	0.00	600,000.00
10-91-7037	FIRE STATION GENERATOR	26,250.00	26,250.00	0.00	0.00	26,250.00
10-91-7038	POLICE GENERATOR	17,000.00	17,000.00	0.00	4,084.79	12,915.21
10-91-7054	POOL HOUSE ROOF REPAIR	8,750.00	0.00	0.00	0.00	0.00
10-91-7064	POOL OFFICE REMODEL	0.00	51,100.00	-18,200.00	51,100.00	0.00
10-91-7066	PLAYGROUND STRUCT/CLARK HENRY	75,000.00	75,000.00	0.00	0.00	75,000.00
10-91-7086	POOL DECKING REFURBISH/TEXTURE	125,000.00	82,650.00	0.00	73,525.00	9,125.00
10-91-7095	FIRE STATION REMODEL	23,000.00	23,000.00	0.00	0.00	23,000.00
10-91-7103	NEW CITY HALL - CONSTRUCTION	8,000,000.00	7,958,000.00	0.00	0.00	7,958,000.00
10-91-7105	PARK IMPROVEMENTS	50,000.00	50,000.00	18,200.00	18,200.00	31,800.00
10-91-7107	PARK MASTER PLAN	0.00	0.00	0.00	13,320.00	-13,320.00
10-91-7117	GOLF COURSE IRRIGATION PROJECT	0.00	350,000.00	44,850.00	195,132.68	154,867.32
10-91-7118	BAY DOOR REPAIR FIRE DEPARTMENT	0.00	0.00	0.00	25,000.00	-25,000.00
10-91-7120	290 EXPANSION	0.00	0.00	0.00	49,814.00	-49,814.00
10-91-7125	NEW CITY HALL ENG & ARCHITECT	0.00	0.00	0.00	12,242.20	-12,242.20
10-91-7127	NEW TAYLOR BLDG CONSTRUCTION	0.00	0.00	0.00	7,425.00	-7,425.00
10-91-7130	FACILITIES IMPROVEMENT	50,000.00	50,000.00	0.00	0.00	50,000.00
10-91-7134	STREET PANELS REPLACEMENT (2)	105,000.00	105,000.00	0.00	105,627.00	-627.00
10-91-7136	GATEWAY ENTRANCE	0.00	0.00	1,017.54	174,657.49	-174,657.49
10-91-7151	GOLF COURSE RIO GRANDE FENCE	0.00	0.00	0.00	0.00	0.00
	Category: 70 - CAPITAL IMPROVEMENTS Total:	**9,080,000.00**	**9,388,000.00**	**284,412.89**	**2,001,103.42**	**7,386,896.58**
Category: 97 - INTERFUND ACTIVITY						
10-91-9765	TRANSFER TO TIRZ 2	0.00	42,000.00	0.00	0.00	42,000.00
	Category: 97 - INTERFUND ACTIVITY Total:	**0.00**	**42,000.00**	**0.00**	**0.00**	**42,000.00**
	Department: 91 - 91 Total:	**9,080,000.00**	**9,430,000.00**	**284,412.89**	**2,001,103.42**	**7,428,896.58**
	Fund: 10 - CAPITAL IMPROVEMENTS FUND Surplus (Deficit):	**-7,980,000.00**	**-8,330,000.00**	**-284,324.85**	**-1,997,875.93**	
	Total Surplus (Deficit):	**-7,013,387.55**	**-7,814,775.77**	**-1,099,683.10**	**2,713,170.22**	

REGULAR SESSION CITY COUNCIL MEETING PACKET FOR THE MEETING TO BE HELD ON SEPTEMBER 20, 2021

Group Summary

Category	Original Total Budget	Current Total Budget	MTD Activity	YTD Activity	Budget Remaining
Fund: 01 - GENERAL FUND					
Department: 10 - REVENUES					
72 - PROPERTY TAXES	6,564,473.76	6,564,473.76	102.57	6,486,671.80	77,801.96
75 - OTHER TAXES	6,325,000.00	6,325,000.00	547,290.78	5,920,698.13	404,301.87
80 - FINES WARRANTS & BONDS	1,018,000.00	1,018,000.00	50,823.75	633,766.55	384,233.45
85 - FEE & CHARGES FOR SERVICE	365,750.00	365,750.00	21,895.58	330,275.01	35,474.99
90 - LICENSES & PERMITS	149,700.00	149,700.00	13,114.09	140,190.45	9,509.55
96 - INTEREST EARNED	100,000.00	100,000.00	293.06	5,747.00	94,253.00
97 - INTERFUND ACTIVITY	2,492,060.70	2,492,060.70	657,830.00	2,408,022.45	84,038.25
98 - MISCELLANEOUS REVENUE	331,100.00	331,100.00	59,085.79	423,407.41	-92,307.41
99 - OTHER AGENCY REVENUES	90,000.00	90,000.00	0.00	520,384.80	-430,384.80
Department: 10 - REVENUES Total:	**17,436,084.46**	**17,436,084.46**	**1,350,435.62**	**16,869,163.60**	**566,920.86**

REGULAR SESSION CITY COUNCIL MEETING PACKET FOR THE MEETING TO BE HELD ON SEPTEMBER 20, 2021

Category	Original Total Budget	Current Total Budget	MTD Activity	YTD Activity	Budget Remaining
Department: 11 - ADMINISTRATIVE SERVICE					
30 - SALARIES, WAGES, & BENEFITS	585,903.31	585,903.31	40,913.18	475,176.22	110,727.09
35 - SUPPLIES	14,350.00	14,350.00	297.03	10,979.96	3,370.04
45 - MAINTENANCE	2,000.00	2,000.00	0.00	0.00	2,000.00
50 - SERVICES	75,251.00	75,251.00	5,677.14	55,622.54	19,628.46
54 - SUNDRY	16,000.00	16,000.00	0.00	22,787.62	-6,787.62
60 - OTHER SERVICES	300.00	300.00	0.00	0.00	300.00
97 - INTERFUND ACTIVITY	4,500.00	4,500.00	4,500.00	4,500.00	0.00
Department: 11 - ADMINISTRATIVE SERVICE Total:	**698,304.31**	**698,304.31**	**51,387.35**	**569,066.34**	**129,237.97**

REGULAR SESSION CITY COUNCIL MEETING PACKET FOR THE MEETING TO BE HELD ON SEPTEMBER 20, 2021

Category	Original Total Budget	Current Total Budget	MTD Activity	YTD Activity	Budget Remaining
Department: 12 - LEGAL/OTHER SERVICES					
30 - SALARIES, WAGES, & BENEFITS	250.00	250.00	0.00	224.95	25.05
50 - SERVICES	2,172,000.00	2,172,000.00	370,695.22	1,248,255.34	923,744.66
55 - PROFESSIONAL SERVICES	135,000.00	135,000.00	12,031.82	91,697.92	43,302.08
60 - OTHER SERVICES	114,990.00	114,990.00	0.00	120,209.53	-5,219.53
97 - INTERFUND ACTIVITY	1,426,266.14	1,426,266.14	375.00	375.00	1,425,891.14
Department: 12 - LEGAL/OTHER SERVICES Total:	**3,848,506.14**	**3,848,506.14**	**383,102.04**	**1,460,762.74**	**2,387,743.40**

REGULAR SESSION CITY COUNCIL MEETING PACKET FOR THE MEETING TO BE HELD ON SEPTEMBER 20, 2021

Category	Original Total Budget	Current Total Budget	MTD Activity	YTD Activity	Budget Remaining
Department: 13 - INFO TECHNOLOGY					
30 - SALARIES, WAGES, & BENEFITS	339,478.67	339,478.67	25,484.27	287,790.70	51,687.97
35 - SUPPLIES	3,050.00	3,050.00	0.00	1,349.91	1,700.09
45 - MAINTENANCE	219,278.00	219,278.00	10,136.54	195,544.82	23,733.18
50 - SERVICES	37,070.00	37,070.00	165.51	22,801.36	14,268.64
55 - PROFESSIONAL SERVICES	45,000.00	45,000.00	0.00	19,088.00	25,912.00
65 - CAPITAL OUTLAY	59,000.00	59,000.00	2,073.75	57,138.65	1,861.35
97 - INTERFUND ACTIVITY	48,775.00	48,775.00	48,775.00	48,775.00	0.00
Department: 13 - INFO TECHNOLOGY Total:	**751,651.67**	**751,651.67**	**86,635.07**	**632,488.44**	**119,163.23**

REGULAR SESSION CITY COUNCIL MEETING PACKET FOR THE MEETING TO BE HELD ON SEPTEMBER 20, 2021

Category	Original Total Budget	Current Total Budget	MTD Activity	YTD Activity	Budget Remaining
Department: 14 - PURCHASING					
35 - SUPPLIES	20,000.00	20,000.00	1,547.91	15,130.26	4,869.74
50 - SERVICES	3,000.00	3,000.00	0.00	2,004.75	995.25
Department: 14 - PURCHASING Total:	**23,000.00**	**23,000.00**	**1,547.91**	**17,135.01**	**5,864.99**

REGULAR SESSION CITY COUNCIL MEETING PACKET FOR THE MEETING TO BE HELD ON SEPTEMBER 20, 2021

Category	Original Total Budget	Current Total Budget	MTD Activity	YTD Activity	Budget Remaining
Department: 15 - ACCOUNTING SERVICES					
30 - SALARIES, WAGES, & BENEFITS	336,042.91	391,042.91	28,659.70	311,192.76	79,850.15
35 - SUPPLIES	950.00	950.00	0.00	668.84	281.16
45 - MAINTENANCE	150.00	150.00	0.00	0.00	150.00
50 - SERVICES	7,100.00	7,100.00	65.51	2,068.17	5,031.83
54 - SUNDRY	550.00	550.00	0.00	460.00	90.00
55 - PROFESSIONAL SERVICES	27,000.00	27,000.00	1,718.32	48,487.66	-21,487.66
97 - INTERFUND ACTIVITY	1,575.00	1,575.00	1,575.00	1,575.00	0.00
Department: 15 - ACCOUNTING SERVICES Total:	**373,367.91**	**428,367.91**	**32,018.53**	**364,452.43**	**63,915.48**

REGULAR SESSION CITY COUNCIL MEETING PACKET FOR THE MEETING TO BE HELD ON SEPTEMBER 20, 2021

Category	Original Total Budget	Current Total Budget	MTD Activity	YTD Activity	Budget Remaining
Department: 16 - CUSTOMER SERVICE					
30 - SALARIES, WAGES, & BENEFITS	63,809.62	63,809.62	4,918.86	56,014.72	7,794.90
35 - SUPPLIES	500.00	500.00	290.28	771.80	-271.80
45 - MAINTENANCE	400.00	400.00	0.00	0.00	400.00
50 - SERVICES	3,000.00	3,000.00	65.51	920.05	2,079.95
55 - PROFESSIONAL SERVICES	68,000.00	68,000.00	14,310.00	62,918.87	5,081.13
97 - INTERFUND ACTIVITY	375.00	375.00	375.00	375.00	0.00
Department: 16 - CUSTOMER SERVICE Total:	**136,084.62**	**136,084.62**	**19,959.65**	**121,000.44**	**15,084.18**

REGULAR SESSION CITY COUNCIL MEETING PACKET FOR THE MEETING TO BE HELD ON SEPTEMBER 20, 2021

Category	Original Total Budget	Current Total Budget	MTD Activity	YTD Activity	Budget Remaining
Department: 19 - MUNICIPAL COURT					
30 - SALARIES, WAGES, & BENEFITS	319,274.97	319,274.97	17,862.59	196,194.11	123,080.86
35 - SUPPLIES	2,300.00	2,300.00	0.00	865.89	1,434.11
45 - MAINTENANCE	500.00	500.00	0.00	0.00	500.00
50 - SERVICES	7,800.00	7,800.00	65.51	2,345.20	5,454.80
54 - SUNDRY	800.00	800.00	0.00	19.50	780.50
55 - PROFESSIONAL SERVICES	93,450.00	93,450.00	5,800.00	45,118.50	48,331.50
Department: 19 - MUNICIPAL COURT Total:	**424,124.97**	**424,124.97**	**23,728.10**	**244,543.20**	**179,581.77**

REGULAR SESSION CITY COUNCIL MEETING PACKET FOR THE MEETING TO BE HELD ON SEPTEMBER 20, 2021

Category	Original Total Budget	Current Total Budget	MTD Activity	YTD Activity	Budget Remaining
Department: 21 - POLICE					
30 - SALARIES, WAGES, & BENEFITS	3,296,625.09	3,296,625.09	259,480.81	2,798,952.26	497,672.83
35 - SUPPLIES	127,524.00	128,646.00	2,849.07	95,380.73	33,265.27
45 - MAINTENANCE	25,497.00	23,497.00	4,369.92	8,749.36	14,747.64
50 - SERVICES	41,249.90	43,249.90	1,493.06	37,452.76	5,797.14
54 - SUNDRY	3,000.00	3,000.00	0.00	973.16	2,026.84
55 - PROFESSIONAL SERVICES	1,800.00	1,800.00	0.00	1,598.21	201.79
60 - OTHER SERVICES	21,740.00	21,740.00	0.00	16,890.30	4,849.70
65 - CAPITAL OUTLAY	13,000.00	13,000.00	0.00	8,975.00	4,025.00
97 - INTERFUND ACTIVITY	16,025.00	16,025.00	16,025.00	16,025.00	0.00
Department: 21 - POLICE Total:	**3,546,460.99**	**3,547,582.99**	**284,217.86**	**2,984,996.78**	**562,586.21**

REGULAR SESSION CITY COUNCIL MEETING PACKET FOR THE MEETING TO BE HELD ON SEPTEMBER 20, 2021

Category	Original Total Budget	Current Total Budget	MTD Activity	YTD Activity	Budget Remaining
Department: 23 - COMMUNICATIONS					
30 - SALARIES, WAGES, & BENEFITS	724,485.99	724,485.99	51,379.48	632,201.78	92,284.21
35 - SUPPLIES	13,365.00	13,365.00	0.00	7,783.34	5,581.66
45 - MAINTENANCE	22,050.00	22,050.00	13,400.00	14,929.89	7,120.11
50 - SERVICES	12,300.00	12,300.00	154.50	5,374.54	6,925.46
60 - OTHER SERVICES	600.00	600.00	0.00	96.90	503.10
97 - INTERFUND ACTIVITY	54,825.00	54,825.00	54,825.00	54,825.00	0.00
Department: 23 - COMMUNICATIONS Total:	**827,625.99**	**827,625.99**	**119,758.98**	**715,211.45**	**112,414.54**

REGULAR SESSION CITY COUNCIL MEETING PACKET FOR THE MEETING TO BE HELD ON SEPTEMBER 20, 2021

Category	Original Total Budget	Current Total Budget	MTD Activity	YTD Activity	Budget Remaining
Department: 25 - FIRE DEPARTMENT					
30 - SALARIES, WAGES, & BENEFITS	1,171,993.75	1,567,259.97	109,222.82	1,307,500.40	259,759.57
35 - SUPPLIES	163,348.00	163,348.00	-12,422.26	125,628.89	37,719.11
45 - MAINTENANCE	41,949.00	41,949.00	133.78	46,018.76	-4,069.76
50 - SERVICES	44,865.00	44,865.00	1,509.90	28,917.46	15,947.54
54 - SUNDRY	1,299.00	1,299.00	0.00	0.00	1,299.00
55 - PROFESSIONAL SERVICES	54,600.00	54,600.00	2,603.83	32,242.32	22,357.68
65 - CAPITAL OUTLAY	0.00	0.00	0.00	3.49	-3.49
97 - INTERFUND ACTIVITY	524,529.00	524,529.00	524,529.00	524,529.00	0.00
Department: 25 - FIRE DEPARTMENT Total:	**2,002,583.75**	**2,397,849.97**	**625,577.07**	**2,064,840.32**	**333,009.65**

REGULAR SESSION CITY COUNCIL MEETING PACKET FOR THE MEETING TO BE HELD ON SEPTEMBER 20, 2021

Category	Original Total Budget	Current Total Budget	MTD Activity	YTD Activity	Budget Remaining
Department: 30 - PUBLIC WORKS					
30 - SALARIES, WAGES, & BENEFITS	226,446.80	226,446.80	16,803.79	193,109.08	33,337.72
35 - SUPPLIES	4,700.00	4,700.00	86.00	3,544.65	1,155.35
45 - MAINTENANCE	100.00	100.00	0.00	0.00	100.00
50 - SERVICES	4,650.00	4,650.00	65.50	1,777.78	2,872.22
55 - PROFESSIONAL SERVICES	20,000.00	20,000.00	360.00	22,633.31	-2,633.31
97 - INTERFUND ACTIVITY	41,125.00	41,125.00	41,125.00	41,125.00	0.00
Department: 30 - PUBLIC WORKS Total:	**297,021.80**	**297,021.80**	**58,440.29**	**262,189.82**	**34,831.98**

REGULAR SESSION CITY COUNCIL MEETING PACKET FOR THE MEETING TO BE HELD ON SEPTEMBER 20, 2021

Category	Original Total Budget	Current Total Budget	MTD Activity	YTD Activity	Budget Remaining
Department: 31 - COMMUNITY DEVELOPMENT					
30 - SALARIES, WAGES, & BENEFITS	370,463.16	370,463.16	12,781.49	267,318.00	103,145.16
35 - SUPPLIES	8,400.00	8,400.00	116.00	2,444.20	5,955.80
50 - SERVICES	13,600.00	13,600.00	65.50	1,222.18	12,377.82
54 - SUNDRY	0.00	0.00	0.00	68.45	-68.45
55 - PROFESSIONAL SERVICES	50,000.00	50,000.00	7,417.00	60,445.84	-10,445.84
65 - CAPITAL OUTLAY	600.00	600.00	0.00	583.24	16.76
97 - INTERFUND ACTIVITY	60,830.00	60,830.00	60,830.00	60,830.00	0.00
Department: 31 - COMMUNITY DEVELOPMENT Total:	**503,893.16**	**503,893.16**	**81,209.99**	**392,911.91**	**110,981.25**

REGULAR SESSION CITY COUNCIL MEETING PACKET FOR THE MEETING TO BE HELD ON SEPTEMBER 20, 2021

Category	Original Total Budget	Current Total Budget	MTD Activity	YTD Activity	Budget Remaining
Department: 32 - STREETS					
30 - SALARIES, WAGES, & BENEFITS	283,800.01	283,800.01	17,683.38	205,039.18	78,760.83
35 - SUPPLIES	94,600.00	94,600.00	2,248.00	93,677.70	922.30
40 - MAINTENANCE--BLDGS, STRUC	60,000.00	60,000.00	14,371.80	50,751.30	9,248.70
45 - MAINTENANCE	1,000.00	1,000.00	0.00	0.00	1,000.00
50 - SERVICES	204,000.00	204,000.00	12,185.05	137,223.59	66,776.41
55 - PROFESSIONAL SERVICES	21,000.00	21,000.00	2,600.00	12,150.00	8,850.00
97 - INTERFUND ACTIVITY	114,835.00	114,835.00	114,835.00	114,835.00	0.00
Department: 32 - STREETS Total:	**779,235.01**	**779,235.01**	**163,923.23**	**613,676.77**	**165,558.24**

REGULAR SESSION CITY COUNCIL MEETING PACKET FOR THE MEETING TO BE HELD ON SEPTEMBER 20, 2021

Category	Original Total Budget	Current Total Budget	MTD Activity	YTD Activity	Budget Remaining
Department: 33 - BUILDING MAINTENANCE					
30 - SALARIES, WAGES, & BENEFITS	111,531.24	111,531.24	8,027.85	82,916.28	28,614.96
35 - SUPPLIES	15,450.00	15,450.00	54.00	4,788.29	10,661.71
40 - MAINTENANCE--BLDGS, STRUC	30,500.00	30,500.00	8,924.00	32,485.72	-1,985.72
45 - MAINTENANCE	1,000.00	1,000.00	0.00	130.96	869.04
50 - SERVICES	104,000.00	104,000.00	7,762.72	74,067.33	29,932.67
55 - PROFESSIONAL SERVICES	15,000.00	15,000.00	0.00	990.76	14,009.24
65 - CAPITAL OUTLAY	65,500.00	65,500.00	0.00	49,937.96	15,562.04
97 - INTERFUND ACTIVITY	27,320.00	27,320.00	27,320.00	27,320.00	0.00
Department: 33 - BUILDING MAINTENANCE Total:	**370,301.24**	**370,301.24**	**52,088.57**	**272,637.30**	**97,663.94**

REGULAR SESSION CITY COUNCIL MEETING PACKET FOR THE MEETING TO BE HELD ON SEPTEMBER 20, 2021

Category	Original Total Budget	Current Total Budget	MTD Activity	YTD Activity	Budget Remaining
Department: 35 - SOLID WASTE					
55 - PROFESSIONAL SERVICES	466,926.00	466,926.00	38,177.03	374,016.74	92,909.26
Department: 35 - SOLID WASTE Total:	**466,926.00**	**466,926.00**	**38,177.03**	**374,016.74**	**92,909.26**

REGULAR SESSION CITY COUNCIL MEETING PACKET FOR THE MEETING TO BE HELD ON SEPTEMBER 20, 2021

Category	Original Total Budget	Current Total Budget	MTD Activity	YTD Activity	Budget Remaining
Department: 36 - FLEET SERVICES					
30 - SALARIES, WAGES, & BENEFITS	186,049.67	186,049.67	14,117.39	164,976.85	21,072.82
35 - SUPPLIES	194,800.00	194,800.00	16,323.61	168,615.69	26,184.31
45 - MAINTENANCE	55,000.00	55,000.00	16,256.79	47,139.04	7,860.96
50 - SERVICES	10,410.00	10,410.00	41.54	6,393.78	4,016.22
54 - SUNDRY	850.00	850.00	0.00	1,116.85	-266.85
65 - CAPITAL OUTLAY	8,500.00	8,500.00	98.85	9,379.81	-879.81
97 - INTERFUND ACTIVITY	55,640.00	55,640.00	55,640.00	55,640.00	0.00
Department: 36 - FLEET SERVICES Total:	**511,249.67**	**511,249.67**	**102,478.18**	**453,262.02**	**57,987.65**

REGULAR SESSION CITY COUNCIL MEETING PACKET FOR THE MEETING TO BE HELD ON SEPTEMBER 20, 2021

Category	Original Total Budget	Current Total Budget	MTD Activity	YTD Activity	Budget Remaining
Department: 38 - RECREATION					
30 - SALARIES, WAGES, & BENEFITS	156,468.99	156,468.99	22,350.68	136,394.95	20,074.04
35 - SUPPLIES	7,550.00	7,550.00	0.00	9,382.96	-1,832.96
45 - MAINTENANCE	500.00	500.00	0.00	2,080.08	-1,580.08
50 - SERVICES	35,400.08	35,400.08	173.00	29,604.07	5,796.01
55 - PROFESSIONAL SERVICES	1,500.00	1,500.00	1,300.00	2,999.84	-1,499.84
Department: 38 - RECREATION Total:	**201,419.07**	**201,419.07**	**23,823.68**	**180,461.90**	**20,957.17**

REGULAR SESSION CITY COUNCIL MEETING PACKET FOR THE MEETING TO BE HELD ON SEPTEMBER 20, 2021

Category	Original Total Budget	Current Total Budget	MTD Activity	YTD Activity	Budget Remaining
Department: 39 - PARKS					
30 - SALARIES, WAGES, & BENEFITS	622,085.71	587,085.71	43,231.46	475,188.95	111,896.76
35 - SUPPLIES	48,000.00	48,000.00	376.53	20,382.27	27,617.73
40 - MAINTENANCE--BLDGS, STRUC	22,000.00	22,000.00	413.47	16,580.91	5,419.09
45 - MAINTENANCE	3,500.00	3,500.00	0.00	334.58	3,165.42
50 - SERVICES	6,800.00	6,800.00	65.50	3,625.16	3,174.84
55 - PROFESSIONAL SERVICES	2,000.00	2,000.00	0.00	0.00	2,000.00
65 - CAPITAL OUTLAY	40,000.00	75,000.00	0.00	36,448.50	38,551.50
97 - INTERFUND ACTIVITY	43,450.00	43,450.00	43,450.00	43,450.00	0.00
Department: 39 - PARKS Total:	**787,835.71**	**787,835.71**	**87,536.96**	**596,010.37**	**191,825.34**
Fund: 01 - GENERAL FUND Surplus (Deficit):	**886,492.45**	**435,104.23**	**-885,174.87**	**4,549,499.62**	**-4,114,395.39**
Fund: 03 - DEBT SERVICE FUND					
Department: 50 - 50					
72 - PROPERTY TAXES	1,498,727.00	1,498,727.00	0.00	1,446,751.62	51,975.38
96 - INTEREST EARNED	10,000.00	10,000.00	6.15	138.64	9,861.36
97 - INTERFUND ACTIVITY	88,418.00	88,418.00	88,418.00	88,418.00	0.00
Department: 50 - 50 Total:	**1,597,145.00**	**1,597,145.00**	**88,424.15**	**1,535,308.26**	**61,836.74**

REGULAR SESSION CITY COUNCIL MEETING PACKET FOR THE MEETING TO BE HELD ON SEPTEMBER 20, 2021

Category	Original Total Budget	Current Total Budget	MTD Activity	YTD Activity	Budget Remaining
Department: 51 - DEBT SERVICE					
61 - DEBT SERVICE	1,527,325.00	1,527,325.00	0.00	1,391,475.00	135,850.00
Department: 51 - DEBT SERVICE Total:	**1,527,325.00**	**1,527,325.00**	**0.00**	**1,391,475.00**	**135,850.00**
Fund: 03 - DEBT SERVICE FUND Surplus (Deficit):	**69,820.00**	**69,820.00**	**88,424.15**	**143,833.26**	**-74,013.26**
Fund: 05 - MOTEL TAX FUND					
Department: 55 - 55					
75 - OTHER TAXES	70,000.00	70,000.00	2,286.38	52,045.43	17,954.57
96 - INTEREST EARNED	1,200.00	1,200.00	6.09	117.84	1,082.16
Department: 55 - 55 Total:	**71,200.00**	**71,200.00**	**2,292.47**	**52,163.27**	**19,036.73**

REGULAR SESSION CITY COUNCIL MEETING PACKET FOR THE MEETING TO BE HELD ON SEPTEMBER 20, 2021

Category	Original Total Budget	Current Total Budget	MTD Activity	YTD Activity	Budget Remaining
Department: 56 - MOTEL TAX					
50 - SERVICES	41,900.00	41,900.00	1,900.00	15,450.00	26,450.00
97 - INTERFUND ACTIVITY	19,000.00	19,000.00	19,000.00	19,000.00	0.00
Department: 56 - MOTEL TAX Total:	**60,900.00**	**60,900.00**	**20,900.00**	**34,450.00**	**26,450.00**
Fund: 05 - MOTEL TAX FUND Surplus (Deficit):	**10,300.00**	**10,300.00**	**-18,607.53**	**17,713.27**	**-7,413.27**
Fund: 10 - CAPITAL IMPROVEMENTS FUND					
Department: 90 - 90					
96 - INTEREST EARNED	20,000.00	20,000.00	88.04	3,227.49	16,772.51
97 - INTERFUND ACTIVITY	1,080,000.00	1,080,000.00	0.00	0.00	1,080,000.00
Department: 90 - 90 Total:	**1,100,000.00**	**1,100,000.00**	**88.04**	**3,227.49**	**1,096,772.51**

REGULAR SESSION CITY COUNCIL MEETING PACKET FOR THE MEETING TO BE HELD ON SEPTEMBER 20, 2021

Category	Original Total Budget	Current Total Budget	MTD Activity	YTD Activity	Budget Remaining
Department: 91 - 91					
70 - CAPITAL IMPROVEMENTS	9,080,000.00	9,388,000.00	284,412.89	2,001,103.42	7,386,896.58
97 - INTERFUND ACTIVITY	0.00	42,000.00	0.00	0.00	42,000.00
Department: 91 - 91 Total:	**9,080,000.00**	**9,430,000.00**	**284,412.89**	**2,001,103.42**	**7,428,896.58**
Fund: 10 - CAPITAL IMPROVEMENTS FUND Surplus (Deficit):	**-7,980,000.00**	**-8,330,000.00**	**-284,324.85**	**-1,997,875.93**	**-6,332,124.07**
Total Surplus (Deficit):	**-7,013,387.55**	**-7,814,775.77**	**-1,099,683.10**	**2,713,170.22**	

REGULAR SESSION CITY COUNCIL MEETING PACKET FOR THE MEETING TO BE HELD ON SEPTEMBER 20, 2021

Fund Summary

Fund	Original Total Budget	Current Total Budget	MTD Activity	YTD Activity	Budget Remaining
01 - GENERAL FUND	886,492.45	435,104.23	-885,174.87	4,549,499.62	-4,114,395.39
03 - DEBT SERVICE FUND	69,820.00	69,820.00	88,424.15	143,833.26	-74,013.26
05 - MOTEL TAX FUND	10,300.00	10,300.00	-18,607.53	17,713.27	-7,413.27
10 - CAPITAL IMPROVEMENTS ...	-7,980,000.00	-8,330,000.00	-284,324.85	-1,997,875.93	-6,332,124.07
Total Surplus (Deficit):	**-7,013,387.55**	**-7,814,775.77**	**-1,099,683.10**	**2,713,170.22**	

REGULAR SESSION CITY COUNCIL MEETING PACKET FOR THE MEETING TO BE HELD ON SEPTEMBER 20, 2021

CITY OF JERSEY VILLAGE

PROPERTY TAX COLLECTION REPORT

JULY 2021

REGULAR SESSION CITY COUNCIL MEETING PACKET FOR THE MEETING TO BE HELD ON SEPTEMBER 20, 2021

JURISDICTION: 0070 City of Jersey Village

	TAX RATE	TAX LEVY	PAID ACCTS
YEAR 2020	00.723466	73,188.99	3,108

YEAR	TAXES DUE	MONTH ADJ	ADJUSTMENT YTD	LEVY PAID	PAID YTD	BALANCE	COLL %	YTD UNCOLL
2020	125,005.08	51,816.09-	51,816.09-	28,563.60-	28,563.60-	101,752.59	39.03-	0.00
2019	41,467.65	56,418.91-	56,418.91-	49,068.25-	49,068.25-	34,116.99	28.19	0.00
2018	27,128.80	116.58-	116.58-	543.06-	543.06-	27,555.28	2.01-	0.00
2017	18,106.81	491.84-	491.84-	491.84-	491.84-	18,106.81	2.79-	0.00
2016	12,050.51	.00	0.00	0.00	0.00	12,050.51		0.00
2015	10,199.59	.00	0.00	0.00	0.00	10,199.59		0.00
2014	8,876.29	.00	0.00	0.00	0.00	8,876.29		0.00
2013	7,716.34	.00	0.00	0.00	0.00	7,716.34		0.00
2012	8,064.75	.00	0.00	0.00	0.00	8,064.75		0.00
2011	9,824.85	.00	0.00	0.00	0.00	9,824.85		0.00
2010	8,015.23	.00	0.00	0.00	0.00	8,015.23		0.00
2009	5,453.54	.00	0.00	0.00	0.00	5,453.54		0.00
2008	2,474.69	.00	0.00	0.00	0.00	2,474.69		0.00
2007	2,578.18	.00	0.00	0.00	0.00	2,578.18		0.00
2006	2,086.72	.00	0.00	0.00	0.00	2,086.72		0.00
2005	1,705.11	.00	0.00	0.00	0.00	1,705.11		0.00
2004	1,110.04	.00	0.00	0.00	0.00	1,110.04		0.00
2003	378.07	.00	0.00	0.00	0.00	378.07		0.00
2002	463.05	.00	0.00	0.00	0.00	463.05		0.00
2001	382.66	.00	0.00	0.00	0.00	382.66		0.00
2000	334.73	.00	0.00	0.00	0.00	334.73		0.00
1999	0.00	.00	0.00	0.00	0.00	0.00		0.00
****	293,422.69	108,843.42-	108,843.42-	78,666.75-	78,666.75-	263,246.02		0.00
CURR	125,005.08	51,816.09-	51,816.09-	28,563.60-	28,563.60-	101,752.59		0.00
DELQ	168,417.61	57,027.33-	57,027.33-	50,103.15-	50,103.15-	161,493.43		0.00

REGULAR SESSION CITY COUNCIL MEETING PACKET FOR THE MEETING TO BE HELD ON SEPTEMBER 20,

REVERSALS DETAIL SCHEDULE
FROM: 07/01/2021 THRU 07/31/2021
JURISDICTION: 70 City of Jersey Village

YEAR	DEPOSIT	ACCOUNT NUMBER	EFF YR/MO	LEVY PAID	DISCOUNT GIVEN	PENALTY INTEREST	ATTORNEY	CAUSE /REV	REFUND AMOUNT	PAYMENT AMOUNT	CAT
2017	RF210706	116-476-000-0001	201801	0.00	0.00	0.00	0.00	44	20.59-	20.59-	RF
2017	RF210706	116-476-000-0001	201801	20.59-	0.00	0.00	0.00	44	20.59	0.00	RF
2017	RF210706	118-819-000-0005	201801	471.25-	0.00	0.00	0.00	44	471.25	0.00	RF
2017	RF210706	118-819-000-0005	201801	0.00	0.00	0.00	0.00	44	471.25-	471.25-	RF
		2017 TOTAL		491.84-	0.00	0.00	0.00		0.00	491.84-	
2018	RF210707	116-476-000-0001	201901	20.58-	0.00	0.00	0.00	32	20.58	0.00	RF
2018	RF210707	116-476-000-0001	201901	0.00	0.00	0.00	0.00	32	20.58-	20.58-	RF
2018	RF210726	118-085-071-0003	201901	0.00	0.00	0.00	0.00	33	51.23-	51.23-	RF
2018	RF210726	118-085-071-0003	201901	51.23-	0.00	0.00	0.00	33	51.23	0.00	RF
2018	RF210707	118-819-000-0005	201901	471.25-	0.00	0.00	0.00	32	471.25	0.00	RF
2018	RF210707	118-819-000-0005	201901	0.00	0.00	0.00	0.00	32	471.25-	471.25-	RF
		2018 TOTAL		543.06-	0.00	0.00	0.00		0.00	543.06-	
2019	RF210708	082-128-000-0006	202001	0.00	0.00	0.00	0.00	21	556.87-	556.87-	RF
2019	RF210708	082-128-000-0006	202001	556.87-	0.00	0.00	0.00	21	556.87	0.00	RF
2019	Y0709211	082-128-000-0008	202006	1,746.10-	0.00	261.92-	0.00	0	0.00	2,008.02-	TR
2019	RF210708	116-476-000-0001	202001	27.44-	0.00	0.00	0.00	21	27.44	0.00	RF
2019	RF210708	116-476-000-0001	202001	0.00	0.00	0.00	0.00	21	27.44-	27.44-	RF
2019	RF210708	118-819-000-0005	202001	813.42-	0.00	0.00	0.00	21	813.42	0.00	RF
2019	RF210708	118-819-000-0005	202001	0.00	0.00	0.00	0.00	21	813.42-	813.42-	RF
2019	RF210708	119-338-000-0001	202001	0.00	0.00	0.00	0.00	21	14,315.90-	14,315.90-	RF
2019	RF210708	119-338-000-0001	202001	14,315.90-	0.00	0.00	0.00	21	14,315.90	0.00	RF
2019	RF210708	119-338-000-0002	202001	0.00	0.00	0.00	0.00	21	9,259.74-	9,259.74-	RF
2019	RF210708	119-338-000-0002	202001	9,259.74-	0.00	0.00	0.00	21	9,259.74	0.00	RF
2019	RF210708	119-338-000-0003	202001	15,377.78-	0.00	0.00	0.00	21	15,377.78	0.00	RF
2019	RF210708	119-338-000-0003	202001	0.00	0.00	0.00	0.00	21	15,377.78-	15,377.78-	RF
2019	RF210708	119-338-000-0007	202001	0.00	0.00	0.00	0.00	21	16,175.98-	16,175.98-	RF
2019	RF210708	119-338-000-0007	202001	16,175.98-	0.00	0.00	0.00	21	16,175.98	0.00	RF
2019	RF210708	119-338-000-0011	202001	0.00	0.00	0.00	0.00	21	2,223.07-	2,223.07-	RF
2019	RF210708	119-338-000-0011	202001	2,223.07-	0.00	0.00	0.00	21	2,223.07	0.00	RF
		2019 TOTAL		60,496.30-	0.00	261.92-	0.00		0.00	60,758.22-	
2020	RF210709	082-104-000-0005	202101	0.00	0.00	0.00	0.00	9	253.50-	253.50-	RF
2020	RF210709	082-104-000-0005	202101	253.50-	0.00	0.00	0.00	9	253.50	0.00	RF
2020	RF210709	082-128-000-0006	202101	0.00	0.00	0.00	0.00	9	542.60-	542.60-	RF
2020	RF210709	082-128-000-0006	202101	542.60-	0.00	0.00	0.00	9	542.60	0.00	RF
2020	RF210709	082-133-000-0002	202012	542.60-	0.00	0.00	0.00	9	542.60	0.00	RF
2020	RF210709	082-133-000-0002	202012	0.00	0.00	0.00	0.00	9	542.60-	542.60-	RF

REGULAR SESSION CITY COUNCIL MEETING PACKET FOR THE MEETING TO BE HELD ON SEPTEMBER 20,

REVERSALS DETAIL SCHEDULE
FROM: 07/01/2021 THRU 07/31/2021
JURISDICTION: 70 City of Jersey Village

YEAR	DEPOSIT	ACCOUNT NUMBER	EFF YR/MO	LEVY PAID	DISCOUNT GIVEN	PENALTY INTEREST	ATTORNEY	CAUSE /REV	REFUND AMOUNT	PAYMENT AMOUNT	CAT
2020	RF210729	107-438-000-0017	202012	235.57-	0.00	0.00	0.00	10	235.57	0.00	RF
2020	RF210729	107-438-000-0017	202012	0.00	0.00	0.00	0.00	10	235.57-	235.57-	RF
2020	RF210709	112-886-000-0002	202101	0.00	0.00	0.00	0.00	9	303.03-	303.03-	RF
2020	RF210709	112-886-000-0002	202101	303.03-	0.00	0.00	0.00	9	303.03	0.00	RF
2020	RF210709	114-532-000-0006	202012	948.76-	0.00	0.00	0.00	9	948.76	0.00	RF
2020	RF210709	114-532-000-0006	202012	0.00	0.00	0.00	0.00	9	948.76-	948.76-	RF
2020	RF210729	114-532-001-0003	202012	1,128.84-	0.00	0.00	0.00	10	1,128.84	0.00	RF
2020	RF210729	114-532-001-0003	202012	0.00	0.00	0.00	0.00	10	1,128.84-	1,128.84-	RF
2020	RF210709	116-097-000-0003	202101	37,979.59-	0.00	0.00	0.00	9	37,979.59	0.00	RF
2020	RF210709	116-097-000-0003	202101	0.00	0.00	0.00	0.00	9	37,979.59-	37,979.59-	RF
2020	J0727213	118-020-073-0022	202012	1,201.24-	0.00	0.00	0.00	1	0.00	1,201.24-	TR
2020	RF210709	118-819-000-0005	202101	612.23-	0.00	0.00	0.00	9	612.23	0.00	RF
2020	RF210709	118-819-000-0005	202101	0.00	0.00	0.00	0.00	9	612.23-	612.23-	RF
2020	RF210709	125-357-001-0001	202012	0.00	0.00	0.00	0.00	9	4,063.77-	4,063.77-	RF
2020	RF210709	125-357-001-0001	202012	4,063.77-	0.00	0.00	0.00	9	4,063.77	0.00	RF
2020	RF210729	126-839-001-0001	202101	7,333.27-	0.00	0.00	0.00	10	7,333.27	0.00	RF
2020	RF210729	126-839-001-0001	202101	0.00	0.00	0.00	0.00	10	7,333.27-	7,333.27-	RF
2020	RF210729	220-187-780-0000	202101	208.30-	0.00	0.00	0.00	10	208.30	0.00	RF
2020	RF210729	220-187-780-0000	202101	0.00	0.00	0.00	0.00	10	208.30-	208.30-	RF
2020	RF210709	222-441-600-0000	202106	0.00	0.00	0.00	0.00	9	1.86-	1.86-	RF
2020	RF210709	222-441-600-0000	202102	1.14-	0.00	0.08-	0.00	9	1.22	0.00	RF
2020	RF210709	222-441-600-0000	202102	0.00	0.00	0.00	0.00	9	1.22-	1.22-	RF
2020	RF210709	222-441-600-0000	202106	1.35-	0.00	0.20-	0.31-	9	1.86	0.00	RF
		2020 TOTAL		55,355.79-	0.00	0.28-	0.31-		0.00	55,356.38-	
		YEAR 2017									
		REFUNDS		491.84-	0.00	0.00	0.00		0.00	491.84-	
		RETURNED ITEMS		0.00	0.00	0.00	0.00		0.00	0.00	
		TRANSFERS/REVERSALS		0.00	0.00	0.00	0.00		0.00	0.00	
		TOTAL		491.84-	0.00	0.00	0.00		0.00	491.84-	
		YEAR 2018									
		REFUNDS		543.06-	0.00	0.00	0.00		0.00	543.06-	
		RETURNED ITEMS		0.00	0.00	0.00	0.00		0.00	0.00	
		TRANSFERS/REVERSALS		0.00	0.00	0.00	0.00		0.00	0.00	
		TOTAL		543.06-	0.00	0.00	0.00		0.00	543.06-	
		YEAR 2019									
		REFUNDS		58,750.20-	0.00	0.00	0.00		0.00	58,750.20-	
		RETURNED ITEMS		0.00	0.00	0.00	0.00		0.00	0.00	
		TRANSFERS/REVERSALS		1,746.10-	0.00	261.92-	0.00		0.00	2,008.02-	
		TOTAL		60,496.30-	0.00	261.92-	0.00		0.00	60,758.22-	

REGULAR SESSION CITY COUNCIL MEETING PACKET FOR THE MEETING TO BE HELD ON SEPTEMBER 20,

REVERSALS DETAIL SCHEDULE
FROM: 07/01/2021 THRU 07/31/2021
JURISDICTION: 70 City of Jersey Village

YEAR DEPOSIT	ACCOUNT NUMBER	EFF YR/MO	LEVY PAID	DISCOUNT GIVEN	PENALTY INTEREST	ATTORNEY CAUSE /REV	REFUND AMOUNT	PAYMENT AMOUNT CAT
	YEAR 2020							
	REFUNDS		54,154.55-	0.00	0.28-	0.31-	0.00	54,155.14-
	RETURNED ITEMS		0.00	0.00	0.00	0.00	0.00	0.00
	TRANSFERS/REVERSALS		1,201.24-	0.00	0.00	0.00	0.00	1,201.24-
	TOTAL		55,355.79-	0.00	0.28-	0.31-	0.00	55,356.38-
	ALL YEARS							
	REFUNDS		113,939.65-	0.00	0.28-	0.31-	0.00	113,940.24-
	RETURNED ITEMS		0.00	0.00	0.00	0.00	0.00	0.00
	TRANSFERS/REVERSALS		2,947.34-	0.00	261.92-	0.00	0.00	3,209.26-
	TOTAL		116,886.99-	0.00	262.20-	0.31-	0.00	117,149.50-

GULAR SESSION CITY COUNCIL MEETING PACKET FOR THE MEETING TO BE HELD ON SEPTEMBER 20,

REVERSALS DETAIL SCHEDULE
FROM: 07/01/2021 THRU 07/31/2021
JURISDICTION: 70 City of Jersey Village

YEAR	DEPOSIT	ACCOUNT NUMBER	EFF YR/MO	LEVY PAID	DISCOUNT GIVEN	PENALTY INTEREST	ATTORNEY	CAUSE /REV	REFUND AMOUNT	PAYMENT AMOUNT	CAT
2017	RF210706	116-476-000-0001	201801	0.00	0.00	0.00	0.00	44	20.59-	20.59-	RF
2017	RF210706	116-476-000-0001	201801	20.59-	0.00	0.00	0.00	44	20.59	0.00	RF
2017	RF210706	118-819-000-0005	201801	471.25-	0.00	0.00	0.00	44	471.25	0.00	RF
2017	RF210706	118-819-000-0005	201801	0.00	0.00	0.00	0.00	44	471.25-	471.25-	RF
		2017 TOTAL		491.84-	0.00	0.00	0.00		0.00	491.84-	
2018	RF210707	116-476-000-0001	201901	0.00	0.00	0.00	0.00	32	20.58-	20.58-	RF
2018	RF210707	116-476-000-0001	201901	20.58-	0.00	0.00	0.00	32	20.58	0.00	RF
2018	RF210726	118-085-071-0003	201901	51.23-	0.00	0.00	0.00	33	51.23	0.00	RF
2018	RF210726	118-085-071-0003	201901	0.00	0.00	0.00	0.00	33	51.23-	51.23-	RF
2018	RF210707	118-819-000-0005	201901	0.00	0.00	0.00	0.00	32	471.25-	471.25-	RF
2018	RF210707	118-819-000-0005	201901	471.25-	0.00	0.00	0.00	32	471.25	0.00	RF
		2018 TOTAL		543.06-	0.00	0.00	0.00		0.00	543.06-	
2019	RF210708	082-128-000-0006	202001	0.00	0.00	0.00	0.00	21	556.87-	556.87-	RF
2019	RF210708	082-128-000-0006	202001	556.87-	0.00	0.00	0.00	21	556.87	0.00	RF
2019	Y0709211	082-128-000-0008	202006	1,746.10-	0.00	261.92-	0.00	0	0.00	2,008.02-	TR
2019	RF210708	116-476-000-0001	202001	27.44-	0.00	0.00	0.00	21	27.44	0.00	RF
2019	RF210708	116-476-000-0001	202001	0.00	0.00	0.00	0.00	21	27.44-	27.44-	RF
2019	RF210708	118-819-000-0005	202001	0.00	0.00	0.00	0.00	21	813.42-	813.42-	RF
2019	RF210708	118-819-000-0005	202001	813.42-	0.00	0.00	0.00	21	813.42	0.00	RF
2019	RF210708	119-338-000-0001	202001	0.00	0.00	0.00	0.00	21	14,315.90-	14,315.90-	RF
2019	RF210708	119-338-000-0001	202001	14,315.90-	0.00	0.00	0.00	21	14,315.90	0.00	RF
2019	RF210708	119-338-000-0002	202001	9,259.74-	0.00	0.00	0.00	21	9,259.74	0.00	RF
2019	RF210708	119-338-000-0002	202001	0.00	0.00	0.00	0.00	21	9,259.74-	9,259.74-	RF
2019	RF210708	119-338-000-0003	202001	15,377.78-	0.00	0.00	0.00	21	15,377.78	0.00	RF
2019	RF210708	119-338-000-0003	202001	0.00	0.00	0.00	0.00	21	15,377.78-	15,377.78-	RF
2019	RF210708	119-338-000-0007	202001	0.00	0.00	0.00	0.00	21	16,175.98-	16,175.98-	RF
2019	RF210708	119-338-000-0007	202001	16,175.98-	0.00	0.00	0.00	21	16,175.98	0.00	RF
2019	RF210708	119-338-000-0011	202001	0.00	0.00	0.00	0.00	21	2,223.07-	2,223.07-	RF
2019	RF210708	119-338-000-0011	202001	2,223.07-	0.00	0.00	0.00	21	2,223.07	0.00	RF
		2019 TOTAL		60,496.30-	0.00	261.92-	0.00		0.00	60,758.22-	
2020	RF210709	082-104-000-0005	202101	253.50-	0.00	0.00	0.00	9	253.50	0.00	RF
2020	RF210709	082-104-000-0005	202101	0.00	0.00	0.00	0.00	9	253.50-	253.50-	RF
2020	RF210709	082-128-000-0006	202101	542.60-	0.00	0.00	0.00	9	542.60	0.00	RF
2020	RF210709	082-128-000-0006	202101	0.00	0.00	0.00	0.00	9	542.60-	542.60-	RF
2020	RF210709	082-133-000-0002	202012	542.60-	0.00	0.00	0.00	9	542.60	0.00	RF
2020	RF210709	082-133-000-0002	202012	0.00	0.00	0.00	0.00	9	542.60-	542.60-	RF

REGULAR SESSION CITY COUNCIL MEETING PACKET FOR THE MEETING TO BE HELD ON SEPTEMBER 20,

REVERSALS DETAIL SCHEDULE
FROM: 07/01/2021 THRU 07/31/2021
JURISDICTION: 70 City of Jersey Village

YEAR	DEPOSIT	ACCOUNT NUMBER	EFF YR/MO	LEVY PAID	DISCOUNT GIVEN	PENALTY INTEREST	ATTORNEY	CAUSE /REV	REFUND AMOUNT	PAYMENT AMOUNT	CAT
2020	RF210729	107-438-000-0017	202012	235.57-	0.00	0.00	0.00	10	235.57	0.00	RF
2020	RF210729	107-438-000-0017	202012	0.00	0.00	0.00	0.00	10	235.57-	235.57-	RF
2020	RF210709	112-886-000-0002	202101	0.00	0.00	0.00	0.00	9	303.03-	303.03-	RF
2020	RF210709	112-886-000-0002	202101	303.03-	0.00	0.00	0.00	9	303.03	0.00	RF
2020	RF210709	114-532-000-0006	202012	948.76-	0.00	0.00	0.00	9	948.76	0.00	RF
2020	RF210709	114-532-000-0006	202012	0.00	0.00	0.00	0.00	9	948.76-	948.76-	RF
2020	RF210729	114-532-001-0003	202012	1,128.84-	0.00	0.00	0.00	10	1,128.84	0.00	RF
2020	RF210729	114-532-001-0003	202012	0.00	0.00	0.00	0.00	10	1,128.84-	1,128.84-	RF
2020	RF210709	116-097-000-0003	202101	37,979.59-	0.00	0.00	0.00	9	37,979.59	0.00	RF
2020	RF210709	116-097-000-0003	202101	0.00	0.00	0.00	0.00	9	37,979.59-	37,979.59-	RF
2020	J0727213	118-020-073-0022	202012	1,201.24-	0.00	0.00	0.00	1	0.00	1,201.24-	TR
2020	RF210709	118-819-000-0005	202101	612.23-	0.00	0.00	0.00	9	612.23	0.00	RF
2020	RF210709	118-819-000-0005	202101	0.00	0.00	0.00	0.00	9	612.23-	612.23-	RF
2020	RF210709	125-357-001-0001	202012	4,063.77-	0.00	0.00	0.00	9	4,063.77	0.00	RF
2020	RF210709	125-357-001-0001	202012	0.00	0.00	0.00	0.00	9	4,063.77-	4,063.77-	RF
2020	RF210729	126-839-001-0001	202101	7,333.27-	0.00	0.00	0.00	10	7,333.27	0.00	RF
2020	RF210729	126-839-001-0001	202101	0.00	0.00	0.00	0.00	10	7,333.27-	7,333.27-	RF
2020	RF210729	220-187-780-0000	202101	0.00	0.00	0.00	0.00	10	208.30-	208.30-	RF
2020	RF210729	220-187-780-0000	202101	208.30-	0.00	0.00	0.00	10	208.30	0.00	RF
2020	RF210709	222-441-600-0000	202102	1.14-	0.00	0.08-	0.00	9	1.22	0.00	RF
2020	RF210709	222-441-600-0000	202102	0.00	0.00	0.00	0.00	9	1.22-	1.22-	RF
2020	RF210709	222-441-600-0000	202106	1.35-	0.00	0.20-	0.31-	9	1.86	0.00	RF
2020	RF210709	222-441-600-0000	202106	0.00	0.00	0.00	0.00	9	1.86-	1.86-	RF
		2020 TOTAL		55,355.79-	0.00	0.28-	0.31-		0.00	55,356.38-	
		YEAR 2017									
		REFUNDS		491.84-	0.00	0.00	0.00		0.00	491.84-	
		RETURNED ITEMS		0.00	0.00	0.00	0.00		0.00	0.00	
		TRANSFERS/REVERSALS		0.00	0.00	0.00	0.00		0.00	0.00	
		TOTAL		491.84-	0.00	0.00	0.00		0.00	491.84-	
		YEAR 2018									
		REFUNDS		543.06-	0.00	0.00	0.00		0.00	543.06-	
		RETURNED ITEMS		0.00	0.00	0.00	0.00		0.00	0.00	
		TRANSFERS/REVERSALS		0.00	0.00	0.00	0.00		0.00	0.00	
		TOTAL		543.06-	0.00	0.00	0.00		0.00	543.06-	
		YEAR 2019									
		REFUNDS		58,750.20-	0.00	0.00	0.00		0.00	58,750.20-	
		RETURNED ITEMS		0.00	0.00	0.00	0.00		0.00	0.00	
		TRANSFERS/REVERSALS		1,746.10-	0.00	261.92-	0.00		0.00	2,008.02-	
		TOTAL		60,496.30-	0.00	261.92-	0.00		0.00	60,758.22-	

REGULAR SESSION CITY COUNCIL MEETING PACKET FOR THE MEETING TO BE HELD ON SEPTEMBER 20,

REVERSALS DETAIL SCHEDULE
FROM: 07/01/2021 THRU 07/31/2021
JURISDICTION: 70 City of Jersey Village

YEAR DEPOSIT	ACCOUNT NUMBER	EFF YR/MO	LEVY PAID	DISCOUNT GIVEN	PENALTY INTEREST	ATTORNEY CAUSE /REV	REFUND AMOUNT	PAYMENT AMOUNT CAT
	YEAR 2020							
	REFUNDS		54,154.55-	0.00	0.28-	0.31-	0.00	54,155.14-
	RETURNED ITEMS		0.00	0.00	0.00	0.00	0.00	0.00
	TRANSFERS/REVERSALS		1,201.24-	0.00	0.00	0.00	0.00	1,201.24-
	TOTAL		55,355.79-	0.00	0.28-	0.31-	0.00	55,356.38-
	ALL YEARS							
	REFUNDS		113,939.65-	0.00	0.28-	0.31-	0.00	113,940.24-
	RETURNED ITEMS		0.00	0.00	0.00	0.00	0.00	0.00
	TRANSFERS/REVERSALS		2,947.34-	0.00	261.92-	0.00	0.00	3,209.26-
	TOTAL		116,886.99-	0.00	262.20-	0.31-	0.00	117,149.50-

GULAR SESSION CITY COUNCIL MEETING PACKET FOR THE MEETING TO BE HELD ON SEPTEMBER 20,

SUMMARY OF PAYMENTS AND REVERSALS
FROM: 07/01/2021 THRU 07/31/2021
JURISDICTION: 70 City of Jersey Village

YEAR DEPOSIT	ACCOUNT NUMBER	EFF YR/MO	LEVY PAID	DISCOUNT GIVEN	PENALTY INTEREST	ATTORNEY CAUSE /REV	REFUND AMOUNT	PAYMENT AMOUNT
	2019 TOTAL		11,428.05	0.00	349.47	76.38	0.00	11,853.90
	2020 TOTAL		26,792.19	0.00	1,512.70	1,824.09	0.00	30,128.98
	TOTAL PAYMENTS		38,220.24	0.00	1,862.17	1,900.47	0.00	41,982.88
	2017 TOTAL		491.84-	0.00	0.00	0.00	0.00	491.84-
	2018 TOTAL		543.06-	0.00	0.00	0.00	0.00	543.06-
	2019 TOTAL		60,496.30-	0.00	261.92-	0.00	0.00	60,758.22-
	2020 TOTAL		55,355.79-	0.00	0.28-	0.31-	0.00	55,356.38-
	TOTAL REVERSALS		116,886.99-	0.00	262.20-	0.31-	0.00	117,149.50-
	TOTAL FOR UNIT		78,666.75-	0.00	1,599.97	1,900.16	0.00	75,166.62-

GULAR SESSION CITY COUNCIL MEETING PACKET FOR THE MEETING TO BE HELD ON SEPTEMBER 20,

SUMMARY OF PAYMENTS AND REVERSALS
FROM: 07/01/2021 THRU 07/31/2021
JURISDICTION: 70 City of Jersey Village

YEAR DEPOSIT	ACCOUNT NUMBER	EFF YR/MO	LEVY PAID	DISCOUNT GIVEN	PENALTY INTEREST	ATTORNEY CAUSE /REV	REFUND AMOUNT	PAYMENT AMOUNT
	2019 TOTAL		11,428.05	0.00	349.47	76.38	0.00	11,853.90
	2020 TOTAL		26,792.19	0.00	1,512.70	1,824.09	0.00	30,128.98
	TOTAL PAYMENTS		38,220.24	0.00	1,862.17	1,900.47	0.00	41,982.88
	2017 TOTAL		491.84-	0.00	0.00	0.00	0.00	491.84-
	2018 TOTAL		543.06-	0.00	0.00	0.00	0.00	543.06-
	2019 TOTAL		60,496.30-	0.00	261.92-	0.00	0.00	60,758.22-
	2020 TOTAL		55,355.79-	0.00	0.28-	0.31-	0.00	55,356.38-
	TOTAL REVERSALS		116,886.99-	0.00	262.20-	0.31-	0.00	117,149.50-
	TOTAL FOR UNIT		78,666.75-	0.00	1,599.97	1,900.16	0.00	75,166.62-

GULAR SESSION CITY COUNCIL MEETING PACKET FOR THE MEETING TO BE HELD ON SEPTEMBER 20,

Run Date: 08-10-2021
Report:ACTGL_TCS_JURIS_PDF_HC 1.6
Request Seq: 1271630

Tax Collection System
Distribution Report - PROPERTY TAX
For Deposit Dates: 07/01/2021 thru 07/31/2021

Jurisdiction 0070 JERSEY VILLAGE

Year	Levy	Penalty Interest	Attorney	Adjustment Amount	Net Collections	Commissions (Excludes Attorney)	Net Payable	Disbursed to Jurisdiction	Disbursed to Attorneys
2020	(28,563.60)	1,512.42	1,823.78	77.75	(25,149.65)	135.26	(25,014.39)	77.75	1,823.78
2019	(49,068.25)	87.55	76.38	0.00	(48,904.32)	244.86	(48,659.46)	0.00	76.38
2018	(543.06)	0.00	0.00	0.00	(543.06)	2.71	(540.35)	0.00	0.00
2017	(491.84)	0.00	0.00	0.00	(491.84)	2.46	(489.38)	0.00	0.00
Total:	($78,666.75)	$1,599.97	$1,900.16	$77.75	($75,088.87)	$385.29	($74,703.58)	$77.75	$1,900.16

REGULAR SESSION CITY COUNCIL MEETING PACKET FOR THE MEETING TO BE HELD ON SEPTEMBER 20,

General Fund
For the period ended August 31, 2021

		Adopted Budget	Current Budget	YTD Actual	% of Actual compared to Budget	Projections
Revenue						
	Property Taxes	6,564,473.76	6,564,473.76	6,486,671.80	98.81%	6,564,473.76
	Electric Franchise Taxes	360,000.00	360,000.00	335,889.71	93.30%	360,000.00
	Telephone Franchise	90,000.00	90,000.00	22,884.18	25.43%	30,000.00
	Gas Franchise	40,000.00	40,000.00	39,945.00	99.86%	40,000.00
	Cable TV Franchise	75,000.00	75,000.00	78,096.18	104.13%	78,500.00
	Telecommunication	15,000.00	15,000.00	13,087.85	87.25%	15,000.00
	City Sales Tax	3,810,000.00	3,810,000.00	3,601,093.31	94.52%	3,960,000.00
	Sales TX-Reduce Property Taxes	1,905,000.00	1,905,000.00	1,799,482.35	94.46%	1,980,000.00
	Mixed Drink Tax	30,000.00	30,000.00	30,219.55	100.73%	30,000.00
	Fines Warrants & Bonds *	1,018,000.00	1,018,000.00	633,766.55	62.26%	700,000.00
	Fees & Charge for Services	365,750.00	365,750.00	330,275.01	90.30%	365,750.00
	Licenses & Permits	149,700.00	149,700.00	140,190.45	93.65%	150,000.00
	Interest Earned	100,000.00	100,000.00	5,747.00	5.75%	6,000.00
	Interfund Activity	2,492,060.70	2,492,060.70	2,408,022.45	96.63%	2,492,060.70
	Misc Revenue	331,100.00	331,100.00	423,407.41	127.88%	450,000.00
	Other Agency Revenue	90,000.00	90,000.00	520,384.80	578.21%	600,000.00
	Total Revenue	17,436,084.46	17,436,084.46	16,869,163.60	96.75%	17,821,784.46
Expenditures						
	Administrative Service	698,304.31	698,304.31	569,066.34	81.49%	698,304.31
	Legal/Other Services	3,848,506.14	3,848,506.14	1,460,762.74	37.96%	3,848,506.14
	Info Technology	751,651.67	751,651.67	632,488.44	84.15%	751,651.67
	Purchasing	23,000.00	23,000.00	17,135.01	74.50%	23,000.00
	Accounting Services	373,367.91	428,367.91	364,452.43	85.08%	373,367.91
	Customer Services	136,084.62	136,084.62	121,000.44	88.92%	136,084.62
	Municipal Court	424,124.97	424,124.97	244,543.20	57.66%	424,124.97
	Police Department	3,546,460.99	3,547,582.99	2,984,996.78	84.14%	3,546,460.99
	Communications	827,625.99	827,625.99	715,211.45	86.42%	827,625.99
	Fire Department	2,002,583.75	2,397,849.97	2,064,840.32	86.11%	2,397,849.97
	Public Works	297,021.80	297,021.80	262,189.82	88.27%	297,021.80
	Community Development	503,893.16	503,893.16	392,911.91	77.98%	503,893.16
	Streets	779,235.01	779,235.01	613,676.77	78.75%	779,235.01
	Building Maintenance	370,301.24	370,301.24	272,637.30	73.63%	370,301.24
	Solid Waste	466,926.00	466,926.00	374,016.74	80.10%	466,926.00
	Fleet Services	511,249.67	511,249.67	453,262.02	88.66%	511,249.67
	Recreation	201,419.07	201,419.07	180,461.90	89.60%	204,419.07
	Parks	787,835.71	787,835.71	596,010.37	75.65%	787,835.71
	Total Expenditures	16,549,592.01	17,000,980.23	12,319,663.98	72.46%	16,947,858.23

* Part of the fines revenue collections is transfer to Court Security and Technology Fund

REGULAR SESSION CITY COUNCIL MEETING PACKET FOR THE MEETING TO BE HELD ON SEPTEMBER 20,

Utility Fund
For the period ended August 31, 2021

		Adopted Budget	Current Budget	YTD Actual	% of Actual compared to Budget	Projections
Revenue						
	Fees & Charge for Services	4,635,000.00	4,635,000.00	4,040,796.23	87.18%	4,545,000.00
	Interest Earned	10,000.00	10,000.00	1,793.02	17.93%	2,000.00
	Interfund Activity	-	-			
	Miscellaneous Revenue	127,500.00	127,500.00	114,181.73	89.55%	127,500.00
	Other Agency Revenue	-	-	-		-
	Total Revenue	4,772,500.00	4,772,500.00	4,156,770.98	87.10%	4,674,500.00
Expenditures						
	Water & Sewer	3,945,531.92	3,945,531.92	3,218,342.73	81.57%	3,945,531.92
	Utility Capital Projects	1,450,000.00	1,450,000.00	806,856.64	55.65%	1,450,000.00
		-	-	-		-
	Total Expenditures	5,395,531.92	5,395,531.92	4,025,199.37	74.60%	5,395,531.92

REGULAR SESSION CITY COUNCIL MEETING PACKET FOR THE MEETING TO BE HELD ON SEPTEMBER 20,

MONTHLY REPORT – August 2021

JERSEY VILLAGE FIRE DEPARTMENT

EMERGENCY RESPONSES

	Jan	Feb	Mar	Apr	May	Jun	Jul	Aug	Sep	Oct	Nov	Dec	TOTAL
Fire/County	0	9	4	3	9	7	7	10					49
Fire/ETJ	1	1	2	3	1	1	5	4					18
Fire/JV	44	94	41	43	39	38	40	47					386
EMS/County	0	0	1	0	0	1	0	2					4
EMS/ETJ	7	0	5	4	6	4	9	6					41
EMS/JV	57	67	52	64	50	80	64	57					491
TOTAL	109	171	105	117	105	131	125	126					989
Transports	41	47	36	44	36	55	50	28					337
Aid received	0	2	0	0	1	2	3	6					14
Aid given	2	9	4	3	1	3	3	4					29

FIRE INSPECTIONS CONDUCTED

	Jan	Feb	Mar	Apr	May	Jun	Jul	Aug	Sep	Oct	Nov	Dec	TOTAL
Inspections	151	112	133	33	94	71	54						648

PUBLIC EDUCATION COURSES CONDUCTED

	Jan	Feb	Mar	Apr	May	Jun	Jul	Aug	Sep	Oct	Nov	Dec	TOTAL
Programs	0	0	0	0	0	1	1	1					3
Audience	0	0	0	0	0	15	13	10					38

FIRE INVESTIGATIONS CONDUCTED

	Jan	Feb	Mar	Apr	May	Jun	July	Aug	Sep	Oct	Nov	Dec	TOTAL
	0	6	1	1	2	1	3	2					16

FIRE MARSHAL ACTIVITY

	Jan	Feb	Mar	Apr	May	Jun	Jul	Aug	Sep	Oct	Nov	Dec	TOTAL
Plan Reviews	5	4	1	10	4	3	3	3					33
Fire Drills	4	1	4	1	1	0	0	0					11
Knox	3	1	4		0	1	0	1					10
Inspections	107	74	133	33	19	71	54	37					528
C of O	3	1	3	1	3	3	2	1					17
Fire Alarm Inspection	1	0	3	5	0	1	3	2					15
Fre Sprinkler Inspection	0	0	4	0	2	4	0	3					13
Hydrant Mapping	6	5	1	1	1	0	0	5					19
Hydrant Flow Test	1	0	0	0	0	0	4	0					5
Pre-Plans	11	9	3	0	2	0	0	9					34
Construction Meetings	3	3	3	6	4	6	0	0					25
Fire Lane Violations	3	2	3	1	2	0	3	3					17
Complaints	4	0	5	0	3	0	0	1					13
Emergency Call Assist								16					16

REGULAR SESSION CITY COUNCIL MEETING PACKET FOR THE MEETING TO BE HELD ON SEPTEMBER 20, 2021

AUGUST 2021

Communication Division Monthly Report

Date	CFS - PD	CFS - FD	911 Phone	10 Digit	License Plate	Driver's License	Criminal History	TCIC Messages	Day Total
1-Aug	44	3	19	75	35	47	1	0	224
2-Aug	58	3	21	115	45	42	3	14	301
3-Aug	46	4	27	262	33	40	3	1	416
4-Aug	45	7	20	130	40	37	0	1	280
5-Aug	40	4	22	111	35	38	2	10	262
6-Aug	36	8	18	181	30	30	2	17	322
7-Aug	60	4	14	150	53	40	2	1	324
8-Aug	41	5	16	128	41	48	3	4	286
9-Aug	25	6	15	190	24	18	2	1	281
10-Aug	35	1	20	97	33	41	4	5	236
11-Aug	46	3	24	127	37	31	2	5	275
12-Aug	35	8	16	143	30	25	0	0	257
13-Aug	38	1	17	80	37	31	1	4	209
14-Aug	26	2	16	93	30	21	2	11	201
15-Aug	19	3	20	67	16	17	4	26	172
16-Aug	33	3	23	173	26	34	5	9	306
17-Aug	44	6	16	155	42	52	8	1	324
18-Aug	27	3	21	115	21	20	3	7	217
19-Aug	22	2	6	101	21	18	5	8	183
20-Aug	51	3	22	122	52	44	0	0	294
21-Aug	52	4	14	91	46	62	2	15	286
22-Aug	37	9	25	55	34	29	3	4	196
23-Aug	42	4	26	150	33	23	2	5	285
24-Aug	24	7	30	106	19	26	2	5	219
25-Aug	45	5	19	121	44	42	2	4	282
26-Aug	68	6	27	120	65	56	2	1	345
27-Aug	45	2	18	48	45	20	1	4	183
28-Aug	29	2	17	44	25	23	5	0	145
29-Aug	38	6	19	60	26	25	1	1	176
30-Aug	56	2	26	129	52	50	0	13	328
31-Aug	36	2	12	138	31	41	9	23	292
Totals	**1243**	**128**	**606**	**3677**	**1101**	**1071**	**81**	**200**	**8107**
Totals	**10437**	**1026**	**4864**	**31394**	**8762**	**8764**	**638**	**1406**	**67291**

This month all the full-time dispatchers attended training at the FD with Chief Bitz and several of the new firefighters. CS Rayne Herzog and TCO Amber Rozas tested prospective applicants for our open position. Trainee Caitlin Billington attended the Vesta class at GHC-911 to receive training on how to operate the 911 equipment.

Police Department

Monthly Activity Report

August-2021

ACTIVITY	CURRENT MONTH AUGUST	PREVIOUS MONTH JULY	YTD 2021	TOTAL 2020
PART 1 OFFENSES				
Homicide / Manslaughter	0	0	0	0
Sexual Assault	0	0	2	4
Robbery	0	1	2	2
Aggravated Assault	3	1	5	6
Burglary	7	5	26	24
Larceny	9	12	82	117
Motor Vehicle Theft	6	6	31	42
TOTAL PART I	**25**	**25**	**148**	**195**
TOTAL PART II	**21**	21	131	**397**
TOTAL OFFENSES	**46**	**46**	**279**	**592**
ADDITIONAL STATISTICS				
FAMILY VIOLENCE	5	4	31	23
D.W.I.	16	15	113	107
FELONY	30	12	145	147
MISDEMEANOR	11	4	81	203
WARRANT ARREST	16	3	62	104
JUVENILE	0	1	7	4
TOTAL ARRESTS	**57**	**20**	**295**	**458**
DISPATCH				
CALLS FOR SERVICE	629	638	5595	9362
TRAFFIC STOPS	614	922	4842	8840
ACCIDENTS				
INJURY	12	14	90	121
NON-INJURY	58	61	385	442
FATALITY	0	0	0	0
TOTAL	**70**	**75**	**475**	**563**

Part II Crimes: are "less serious" offenses and include: Simple Assaults, Forgery/Counterfeiting, Embezzlement/Fraud, Receiving Stolen Property, Weapon Violations, Prostitution, Sex Crimes (except rape), Crimes Against Family/Child, Narcotic Drug Laws, Liquor Laws, Drunkenness, Disturbing the Peace, Disorderly Conduct, Gambling, and DWI.

REGULAR SESSION CITY COUNCIL MEETING PACKET FOR THE MEETING TO BE HELD ON SEPTEMBER 20, 2021

Warrant Payment Report

CITY OF JERSEY VILLAGE

9/1/2021 5:22:09 PM

Warrant Payment Totals For 08/01/2021 - 08/31/2021

Payment Activity Totals:			
Payments	**37218.96**	**Transaction Total**	**1720**
Bonds Applied/Forfeit	**4375.9**		
Bonds Posted	**0**		
Total Collected	**41594.86**		
Pending Bond	**0**		
Pending Payments	**0**		
Total Collected	**41594.86**		
Non-Cash Amt:	**3469.6**		

Payment Activity Totals By Fees:			
ADMIN-DEFERRED FEE (2)	**55**	**01-10-8001**	**1**
AR-ARREST FEE	**19.8**		**4**
AR-ARREST FEE	**288.56**	**01-10-8001**	**54**
CCC-CONSOLIDATED COURT COSTS	**34**	**01-0-1213**	**2**
CCC04-CONSOLIDATED COURT FEES	**240**		**6**
CCC04-CONSOLIDATED COURT FEES	**4144.65**	**01-0-1213**	**98**
CJFC-Civil Justice Fee Court	**0.01**		**1**
CJFC-Civil Justice Fee Court	**0.14**	**01-10-8001**	**13**
CJFS-Civil Justice Fee State	**0.09**		**1**
CJFS-Civil Justice Fee State	**1.24**	**01-0-1213**	**13**
CMI-CORRECTIONAL MGMT 09/01/01	**1**	**01-0-1213**	**2**
COLAGY-COLLECTION AGENCY FEE	**565.8**		**7**
COLAGY-COLLECTION AGENCY FEE	**9359.92**	**01-0-1223**	**98**
CVC-COMP TO VICTIMS OF CRIME FUND	**30**	**01-0-1213**	**2**
FA-FUGITIVE APPREHENSION	**10**	**01-0-1213**	**2**
FINE-Fine	**523**		**4**
FINE-Fine	**6700.33**	**01-10-8001**	**46**
IDF-Indigent Defense Fee	**12**		**6**
IDF-Indigent Defense Fee	**207.51**	**01-0-1213**	**98**
JCD2-JUV CRIME & DELINQUENCY 9/1/01	**1**	**01-0-1213**	**2**
JCPT2-JUD CT&PERS TRNG FUND 1999	**4**	**01-0-1213**	**2**
JFCI-Judicial Fee City	**3.6**		**6**
JFCI-Judicial Fee City	**62.25**	**01-10-8008**	**98**
JFCT2-Judicial Fee State	**32.4**		**6**
JFCT2-Judicial Fee State	**560.26**	**01-0-1214**	**98**
SE-SPECIAL EXPENSE FEE	**760.9**	**01-10-8001**	**5**
SEC-MUNICIPAL COURT SECURITY	**15**		**5**
SEC-MUNICIPAL COURT SECURITY	**311.25**	**01-10-8005**	**99**
SJRF-STATE JURY FEE	**20**		**5**
SJRF-STATE JURY FEE	**407**	**01-0-1213**	**97**
STF-STATE TRAFFIC FEE	**30**		**1**
STF-STATE TRAFFIC FEE	**593.95**	**01-0-1213**	**19**
TECH-COURT TECHNOLOGY FEE	**20**		**5**
TECH-COURT TECHNOLOGY FEE	**415**	**01-10-8004**	**99**
TFC-TFC	**3**		**1**
TFC-TFC	**62.39**	**01-10-8001**	**20**
TITLE7-TRAFFIC FINES	**1174.9**		**10**
TITLE7-TRAFFIC FINES	**10009.68**	**01-10-8001**	**52**
TLFTA1-OMNIBASE STATE FEE-DPS	**100**		**5**
TLFTA1-OMNIBASE STATE FEE-DPS	**2500**	**01-0-1226**	**115**
TLFTA2-OMNIBASE FEE	**30**		**5**
TLFTA2-OMNIBASE FEE	**750**	**01-0-1227**	**115**
TLFTA3-OMNIBASE CITY	**20**		**5**
TLFTA3-OMNIBASE CITY	**496**	**01-10-8006**	**114**
TP-CT-JUDICIAL EFFICIENCY FEE	**52.5**	**01-10-8003**	**21**
TPF-TRUANCY PREVENTION FUND	**10**		**5**

REGULAR SESSION CITY COUNCIL MEETING PACKET FOR THE MEETING TO BE HELD ON SEPTEMBER 20, 2021

Warrant Payment Report

CITY OF JERSEY VILLAGE

9/1/2021 5:22:09 PM

Warrant Payment Totals For 08/01/2021 - 08/31/2021

TPF-TRUANCY PREVENTION FUND	179.6	01-0-1213	85
TP-L-TIME PAYMENT - LOCAL FEE	210	01-10-8002	22
TP-S-TIME PAYMENT - STATE FEES	262.5	01-0-1220	21
WRNTFE-WARRANT FEE	650		13
WRNTFE-WARRANT FEE	6593.83	01-10-8001	106
Report Total	45064.46		1720

Payment Activity Totals By Transaction Type:

Applied Bond	4375.9	01-0-1223	166
Non-cash Credit	3469.6	01-0-1223	101
Payment	37218.96	01-0-1223	1453
Report Total	45064.46		1720

REGULAR SESSION CITY COUNCIL MEETING PACKET FOR THE MEETING TO BE HELD ON SEPTEMBER 20, 2021

Police Department Open Positions/Recruitment

August 2021

As of August 31, 2021, the Jersey Village Police Department has the following job openings:

- Patrol Officer (2 open positions)

The Police Department has continued recruiting efforts, and is currently reviewing applications for qualified applicants.

REGULAR SESSION CITY COUNCIL MEETING PACKET FOR THE MEETING TO BE HELD ON SEPTEMBER 20, 2021

No	Last Name	First Name	Req Date	Description of Info Requested	Date Requestor Contacted	Amt	Date of Pick-up or Mailing	Open	Complete	AG Opinion	PROCESS TIME
1	SULLO	SULLO	10/1/2020	LAST 2 WEEKS OF CITATIONS ISSUED			10/6/2020 VIA EMAIL	NO	YES	NO	00 HRS 30 MIN ACCUM 00 HRS 30 MIN
2	LEXUS	NEXUS	10/1/2020	LAST MONTH OF CITATION ISSUED			10/8/2020 VIA EMAIL	NO	YES	NO	00 HRS 30 MIN ACCUM 00 HRS 00 MIN
3	SULLO	SULLO	10/14/2020	LAST 2 WEEKS OF CITATIONS ISSUED			10/20/2020 VIA EMAIL	NO	YES	NO	00 HRS 30 MIIN ACCUM 1 HR 00 MIN
4	MORRISON	DOUGLAS	10/14/2020	COPY OF CFS OR REPORT FOR 2014 @ 11011 PLEASANT COLONY # 2421			10/22/2020 VIA EMAIL	NO	YES	NO	00 HRS 20 MIN ACCUM 00 HRS 20 MIN
5	MCGETTRICK	DANIEL	10/19/2020	COPY OF 911 TRANSCRIPT FOR ACCIDENT 20-7572 ON 6/25/2020 @ 259 AM. ALSO COPY OF BWC, OR DASH CAM VIDEO	10/21/2020 SENT TO AG OFFICE 1/7/2021 WITHHOLD PER AG OFFICE		10/21/2020 VIA EMAIL	NO	NO	YES	2 HRS 00 MIN ACCUM 2 HRS 00 MIN
6	HURD	LARITA	10/21/2020	CFS FOR CASE NUMBER 20-11597			10/21/2020 VIA PU	NO	YES	NO	00 HRS 20 MIN ACCUM 00 HRS 20 MIN
7	SULLO	SULLO	10/26/2020	LAST 2 WEEKS OF CITATIONS ISSUED			11/3/2020 VIA EMAIL	NO	YES	NO	00 HRS 30 MIN ACCUM 1 HRS 30 MIN
8	SHEPHERD	KAMERON	10/27/2020	COPY OF ARREST REPORT 5/24/2020 ON SHEPHERD, KAMERON DOB 10/4/2000 TX ID# 44412662			11/3/2020 VIA EMAIL	NO	YES	NO	2 HRS 00 MIN ACCUM 2 HRS 00 MIN
9	HODGES	ANTHONY	10/28/2020	COPY OF CFS FOR 10/27 CASE 20-14544 BY OFFICER HALL			11/3/2020 VIA EMAIL	NO	YES	NO	00 HRS 30 MIN ACCUM 00 HRS 30 MIN
10	FOGLE	WAYNE	11/3/2020	CRIME STATS FOR 1/2 MILE RADIUS OF 18540 WBSR @ ENERGY CAPITAL FROM 11/1/2019 TO 10/31/2020			11/9/2020 VIA EMAIL	NO	YES	NO	2 HRS 00 MIN ACCUM 2 HRS 00 MIN
11	LEXUS	NEXUS	11/3/2020	LAST MONTH OF CITATION ISSUED			11/3/2020 VIA EMAIL	NO	YES	NO	00 HRS 30 MIN ACCUM 1 HRS 00 MIN
12	KESSLER	WALTER	11/3/2020	COPY OF VIDEO FROM ACCIDENT 20-14395			11/3/2020 VIA PU	NO	YES	NO	00 HRS 20 MIN ACCUM 00 HRS 20 MIN
13	VEGA	RUTH	11/3/2020	COPY OF VIDEO FROM ACCIDENT 20-14395			11/3/2020 VIA PU	NO	YES	NO	00 HRS 20 MIN ACCUM 00 HRS 20 MIN
14	SULLO	SULLO	11/4/2020	LAST 2 WEEKS OF CITATIONS ISSUED			11/9/2020 VIA EMAIL	NO	YES	NO	00 HRS 30 MIN ACCUM 2 HRS 00 MIN
15	OMAR	WARDA	11/4/2020	COPY OF BEARDEN POILCE VIDEO FROM 10/25/2020	11/4 ASKED FOR A WINDOW OF TIME FOR REQUEST 11/11/2020 PROCEED WITH REQUEST AS WRITTEN 11/12 SENT TO AG OFFICE 1/6/2021 WITHHOLD PER AG OFFICE						2 HRS 00 MIN ACCUM 2 HRS 00 MIN
16	KESHI	ASSOCIATES	11/5/2020	COPY OF PCS REPORT 20-14752	11/12 SENT TO AG OFFICE 12/14/2020 WITHHOLD PER AG			YES	NO	YES	2 HRS 00 MIN ACCUM 2 HRS 00 MIN
17	DEROUEN	BRENDA	11/10/2020	ALL POLICE RECORDS, ARREST RECORDS & COMPLAINTS FOR LARITA MAREI HURD.			11/16/2020 VIA EMAIL	NO	YES	NO	2 HRS 00 MIN ACCUM 2 HRS 00 MIN
18	SULLO	SULLO	11/11/2020	LAST 2 WEEKS OF CITATIONS ISSUED			11/18/2020 VIA PU	NO	YES	NO	00 HRS 30 MIN ACCUM 2 HRS 30 MIN
19	THOMSEN	LAURA	11/12/2020	COPY OF POLICE REPORT AND EMS REPORT FOR A ASSAULT THAT OCCURRED IN 2012	11/12 REQUEST A SMALL WINDOW TO SEARCH FOR REPORT		11/16/2020 VIA EMAIL	NO	YES	NO	2 HRS 00 MIN ACCUM 2 HRS 00 MIN
20	MATTHEWS	DONALD	11/16/2020	COPY OF CFS OR REPORT FOR 19-3656 OCCURRED 3/3/2019 @ SAMS CLUB PKLOT			11/16/2020 VIA EMAIL	NO	YES	NO	00 HRS 30 MIN ACCUM 00 HRS 30 MIN
21	BEASLEY	CURT	11/18/2020	NAME OF COMPLAINTANT ON A CITY ORDINANCE VIOLATION OCCURRED ON 11/15/2020 ON WYNDHAM CT/ VILLAGE DR.			11/18/2020 VIA PU	NO	YES	NO	00 HRS 10 MIN ACCUM 00 HRS 10 MIN
22	LEXUS	NEXUS	12/2/2020	LAST MONTH OF CITATION ISSUED			12/2/2020 VIA EMAIL	NO	YES	NO	00 HRS 20 MIN ACCUM 1 HRS 20 MIN
23	SULLO	SULLO	12/2/2020	LAST 2 WEEKS OF CITATIONS ISSUED			12/7/2020 VIA EMAIL	NO	YES	NO	00 HRS 20 MIN ACCUM 3 HRS 00 MIN
24	OSCAR	CRISTOBAL	12/7/2020	COPY OF 20-16508			12/7/2020 VIA PU	NO	YES	NO	00 HRS 30 MIN ACCUM 00 HRS 30 MIN
25	VOSSLER	JAMES	12/8/2020	CFS FOR 8606 WYNDHAM VILLAGE DR FROM 1/1/2000 TO 12/6/2020	SENT EMAIL ON 12/8 & 12/14						00 HRS 30 MIN ACCUM 00 HRS 30 MIN
26	SULLO	SULLO	12/9/2020	LAST 2 WEEKS OF CITATIONS ISSUED	12/17 CANNOT MAKE CONTACT BY EMAIL OR PHONE WILL CLOSE CASE		12/14/2020 VIA EMAIL	NO	YES	NO	00 HRS 30 MIN ACCUM 3 HRS 30 MIN
27	ADAMS	LAW FIRM	12/10/2020	BWC, DASH CAM, PHOTOS TAKEN, WITNESS STATEMENTS, CFS, AUDIO & 911 CALL FOR ACCIDENT 20-16319	12/15 SENT TO AG OFFICE FOR OPINION 3/2/2021 WITHHOLD PER AG OFFICE			NO	NO	YES	2HRS 00 MIN ACCUM 2 HRS 00 MIN
28	SIMMONS	FLETCHER	12/10/2020	COPY OF ACCIDENT, CFS, BWC, DASH CAM, PHOTOS FOR ACCIDENT 20-14694	12/15 SENT TO AG OFFICE FOR OPINION 3/15/2021 WITHHOLD PER AG OFFICE			NO	NO	YES	2 HRS 00 MIN ACCUM 2 HRS 00 MIN
29	SPELL	SHARON	12/14/2020	COPY OF ARREST REPORT DOB 5.9.1972 SPELL, SHARON			12/15/220 VIA EMAIL	NO	YES	NO	2 HRS 00 MIN ACCUM 2 HRS 00 MIN
30	SIMMONS	FLETCHER	12/14/2020	COPY OF BWC, DASHCAM FOR ACCIDENT 20-16176	12/16/2020 SENT TO AG OFFICE FOR OPINION 3/2/2021 WITHHOLD PER AG OFFICE			NO	NO	YES	2 HRS 00 MIN ACCUM 2 HRS 00 MIN

31	SULLO	SULLO	12/16/2020	LAST 2 WEEKS OF CITATIONS ISSUED			12/21/2020 VIA EMAIL	NO	YES	NO	00 HRS 30 MIN ACCUM 4 HRS 00 MIN
32	WILLIAMS	TARA	12/16/2020	COOMPLETE REPORTS INCLUDING PHOTOS FOR 103 WATERCRESS CIRCLE STARTING FROM 9/2020 TO PRESENT TIME			12/21/2020 VIA EMAIL	NO	YES	NO	2 HRS 30 MIN ACCUM 2 HRS 30 MIN
33	CAMPBELL	RICKY	12/16/2020	COPY OF THEFT REPORT 20-17197	WITHDREEW REQUEST		XXXXX	XXXXX	XXXX	XXXX	XXXXXXXX
34	RESEARCH	WORLD	12/17/2020	COPY OF ALL RECORDS AND BOOKING PHOTO FOR HALEY, MICHELLE DOB 10/29/1980			12/21/2020 VIA EMAIL	NO	YES	NO	2 HRS 00 MIN ACCUM 2 HRS 00 MIN
35	RESEARCH	WORLD	12/17/2020	COPY OF RECORDS AND BOOKING PHOTO FOR LEWIS, CHRISTOPHER DOVE DOB 10/06/1995			12/21/2020 PUBLIC PAGE ONLY	YES	NO	YES	00 HRS 30 MIN ACCUM 2 HRS 30 MIN
36	DORRIAN	DIANA	12/21/2020	ARREST AND JAIL RECORDS FROM THE ARREST OF DANIEL JOHN DORRIAN DOB 12/21/1985	12/21/2020 SENT TO AG OPEN CASE W/HCDAO 2/9/2021 WITHHOLD PER AG LETTER RECEIVED			YES	NO	YES	2 HRS 00 MIN ACCUM 2 HRS 00 MIN
37	SULLO	SULLO	12/24/2021	LAST 2 WEEKS OF CITATIONS ISSUED			1/13/2021 VIA EMAIL	NO	YES	NO	00 HRS 30 MIN ACCUM 4 HRS 30 MIN
38	LEXUS	NEXUS	1/5/2020	LAST MONTH OF CITATION ISSUED			1/13/2021 VIA EMAIL	NO	YE	NO	00 HRS 30 MIN ACCUM 2 HRS 30 MIN
39	PATEL	Rajeshai	12/7/2020	COPY OF REPORTS & VIDEO FROM CASE 20-17500	1/18/2021 SENT TO AG OPEN CASE 2/25/2021 WITHHOLD PER AG OFFICE		1/18/2021 COPY OF AG LETTER TO REQUESTOR	YES	NO	YES	2 HRS 00 MIN ACCUM 2 HRS 00 MIN
40	ELMORE	NICHOLAS	1/13/2021	COPY OF BWC, IN CAR VIDEO FROM ACICENT 20-16884	1/19/2021 SENT TO AG OPEN CASE 2/25/2021 WITHHOLD PER AG OFFICE		1/19/2021 COPY OF AG LETTER TO REQUESTOR	YES	NO	YES	2 HRS 00 MIN ACCUM 2 HRS 00 MIN
41	SULLO	SULLO	1/14/2021	LAST 2 WEEKS OF CITATIONS ISSUED			1/25/2021 VIA EMAIL	NO	YES	NO	00 HRS 30 MIN ACCUM 5 HRS 00 MIN
42	CLARK	FRED	1/14/2021	20-1735 CRASH DATE 2/26/2020 COPY OF BWC & VEH MOUNTED CAMERA RECORDINGS			1/25/2020 VIA EMAIL	NO	YES	NO	2 HRS 00 MIN ACCUM 2 HRS 00 MIN
43	KERMANI	MONA	1/14/2021	BWC POLICY FROM 10/2020			1/25/2020 VIA EMAIL	NO	YES	NO	00 HRS 30 MIN ACCUM 00 HRS 30 MIN
44	HARRISON	KOURI	1/18/2021	COPY OF 2 REPORTS FROM 11111 PLWASANT COLONY # 906. REPORTS OCCURDED LAST 4 MONTHS			1/19/2020 VIA EMAIL	NO	YES	NO	2 HRS 00 MIN ACCUM 2 HRS 00 MIN
45	PULLIAM	JUSTIN	1/20/2021	COPY OF CFS 21-775, PHONE CALL RECORDINGS, INCIDENT REPORT			1/28/2020 VIA EMAIL	NO	YES	NO	00 HRS 30 MIN ACCUM 00 HRS 30 MIN
46	WALLACE	JEREMY	1/21/2021	ALL MEIDIA/RECORDS OF THE ARREST/DETENTIO OF DAVID & PATRICK BY ZATZKIN, LIMERICK	1/28 SENT TO CITY ATTORNEY TO HANDLE PER AUSTIN 2/3 OLSON & OLSON SENT TO AG OFFICE		2/3/2021	NO	NO	YES	2HRS 00 MIN ACCUM 2 HRS 00 MIN
47	MONKEY	SLYOUT	1/21/2021	COPY OF BWC THAT ZATZKIN WAS WEARING IN THE DETENTION OF DAVID WARDEN. VIDEO LINK ATTACHED	1/28 SENT TO CITY ATTORNEY TO HANDLE PER AUSTIN 2/3 OLSON & OLSON SENT TO AG OFFICE		2/3/2021	NO	NO	YES	2HRS 00 MIN ACCUM 2 HRS 00 MIN
48	ANAYA	SANDRA	1/21/2021	CFS FOR 2020 & 2021 FOR 11011 PC # 501 OR ANY REPORT OF CONTACT WITH EDGARDO ANAYA DOB 10/31/1954 or 11/15/1942			1/21/2021 VIA EMAIL	NO	YES	NO	00 HRS 30 MIN ACCUM 00 HRS 30 MIN
49	WORDEN	DAVID	1/25/2021	COPY OF BWC FROM ZATZKIN FROM 1/20/2021 @ 16000 LAKEVIEW DR. COPY OF ZATZKIN F5 SEPERATION FORM	2/1 SENT TO CITY ATTORNEY TO HANDLE PER AUSTIN 2/3/2021 OLSON & OLSON SENT TO AG OFFICE						
50	BEAZLEY	MARILEE	1/26/20201	COPY OF M. ZATZKIN PERSONEL FILE	2/1 SENT TO CITY ATTORNEY TO HANDLE PER AUSTIN 2/9/2021 OLSON & OLSON SENT TO AG OFFICE						
51	CITIZEN		1/26/20020	THE NAME OF THE DA THAT OFFICER MATZKIN WAS SPEAKING TO WHEN HE WAS GIVEN THE GREEN LIGHT TO ARREST EARL DAVID WORDEN			2/4/2021 VIA EMAIL	NO	YES	NO	00 HRS 10 MIN ACCUM 00 HRS 10 MIN
52	PIMEDA	MARIA	1/27/20221	COPY OF CFS FOR 10/7/2020 @ LONE STAR MALE FELL AND HIT HEAD IN SERVICE DRIVE			1/27/2021 VIA EMAIL	NO	YES	NO	00 HRS 05 MIN ACCUM 00 HRS 05 MIN
53	LEXUS	NEXUS	2/1/2021	LAST MONTH OF CITATION ISSUED			2/4/2021 VIA EMAIL	NO	YES	NO	00 HRS 30 MIN ACCUM 3 HRS 00 MIN
54	SULLO	SULLO	2/2/2021	LAST 2 WEEKS OF CITATIONS ISSUED			2/4/2021 VIA EMAIL	NO	YES	NO	00 HRS 30 MIN ACCUM 5 HRS 30 MIN
55	BEAZLEY	MARILEE	2/4/2021	ANY AND ALL RECORDS RELATED TO HCSO CASE# 1912-01276			2/4/2021 VIA EMAIL	NO	YES	NO	00 HRS 10 MIN ACCUM
56	UNITE	OHIO MEDIA	2/4/2021	COPIES OF DOCUMENTS OF THE ARREST OF DAVID WORDEN, PATRICK ROTH AS WELL AS COMPLAINTS ON FILE AGAINST ZATZKIN & ANY OTHER OFFICER INVOVLED IN THE ARREST. ALL BWC FOOTAGE AND ACCOMPANYING DOCUMENTS	2/4/2021 SENT TO CITY ATTORNEY TO HANDLE 2/19/2021 EMAILED TRELEANA FOR LIMERICK AND GUZMAN COMPLAIN FROM						
57	LAWSON	STEPHANIE	2/4/2021	CFS & PKLOT VIDEO, & AUDIO RECORDINGS OF 20-17456		$3.00	2/22/2021 VIA PU	YES	NO	YES	2 HRS 00 MIN ACCUM 2 HRS 00 MIN

58	BARBER	RON	2/8/2021	COPY OF PHOTOS/VIDEO ANYTHING THAT WE HAVE FOR BURG TO HOME @ 15713 LAKEVIEW CASE NUMBER 20-0252			2/11/2021 VIA EMAIL	YES RELEA E PER KEELE	YES	NO	2 HRS 00 MIN ACCUM 2 HRS 00 MIN
59	ZATZKIN	MARK	2/8/2021	ALL DOCUMENTS IN MY PERSONAL FILE.	2/11/2021 SENT COST ESTIMATOR TO REQUESTOR 2/11/2021 REQUESTOR AGREED TO PAY COST OF CD'S		2/22/2021 VIA PU	YES PER LT. KEELE	YES	NO	4 HRS 00 MIN ACCUM 4 HRS 00 MIN
60	MAYES	CHRISTOPHER	2/8/2021	ARREST REPORT FOR HERNANDEZ, CLARA NELI FROM 2/22/1990 CASE# 09-0546	2/11/2021 SENT COST ESTIMATOR TO REQUESTOR 2/12/2021 REQUESTOR APPROVED THE COST		3/8/2021 VIA EMAIL	NO	YES	NO	2 HRS 00 MIN ACCUM 2 HRS 00 MIN
61	LAWSON	BRIAN	2/9/2021	COPY OF BWC OF ALL 3 OFFICERS AND 2 WEST SIDE OF STATION OUTSIDE CAMERAS FOR 12/17/2020 BTWN 1945-2030			2/22/2021 VIA PU	NO	YES	NO	2 HRS 00 MIN ACCUM 2 HRS 00 MIN
62	SULLO	SULLO	2/11/2021	LAST 2 WEEKS OF CITATIONS ISSUED			2/23/2021 VIA EMAIL	NO	YES	NO	00 HRS 30 MIN ACCUM 6 HRS 00 MIN
63	HUYNH	LAW FIRM	2/18/2021	20-10219 ACCIDENT 911 RECORDINGS, OTHER DOUCMENTATION			3/4/2021 VIA EMAIL	NO	YES	NO	2 HRS 00 MIN ACCUM 2 HRS 00 MIN
64	SULLO	SULLO	3/1/2021	LAST 2 WEEKS OF CITATIONS ISSUED			3/4/2021 VIA EMAIL	NO	YES	NO	00 HRS 30 MIN ACCUM 6 HRS 30 MIN
65	LEXUS	NEXUS	3/1/2021	LAST MONTH OF CITATION ISSUED			3/4/2021 VIA EMAIL	NO	YES	NO	00 HRS 30 MIN ACCUM 3 HRS 30 MIN
66	HARRIS LAW FIRM	JUSTIN	3/10/2021	COPY OF ARREST OF BURROWS-PENNELL DOB 11/26/1981 ARREST DATE 1/16/2021 CASE 21-0578			3/16/2021 VIA EMAIL CRRR 7016 0750 0000 5549 9772	NO	YES	NO	2 HRS 00 MIN ACCUM 2 HRS 00 MIN
67	SULLO	SULLO	3/18/2021	LAST 2 WEEKS OF CITATIONS ISSUED			3/24/2021 VIA EMAIL	NO	YES	NO	00 HRS 30 MIN ACCUM 7 HRS 00 MIN
68	SULLO	SULLO	3/25/2021	LAST 2 WEEKS OF CITATIONS ISSUED			4/5/2021 VIA EMAIL	NO	YES	NO	00 HRS 30 MIN ACCUM 7 HRS 30 MIN
69	ROBERTS	MARKLAND LLP	3/25/2021	ANY AND ALL RECORDS FOR ACCIDENT 20-1735.			4/7/2021 VIA EMAIL	NO	YES	NO	2 HRS 00 MIN ACCUM 2 HRS 00 MIN
70	LEXUS	NEXUS	4/5/2021	LAST MONTH OF CITATION ISSUED			4/5/2021 VIA EMAIL	NO	YES	NO	00 HRS 30 MIN ACCUM 4 HRS 00 MIN
71	BASSETT	LAW FIRM	4/5/2021	CRIMINAL RECORD AARON OSTERHOUIT			4/7/2021 VIA EMAIL	NO	YES	NO	00 HRS 30 MIN ACCUM 00 HRS 30 MIN
72	BASSETT	LAW FIRM	4/5/2021	CFS, REPORTS OR OFFENSE REPORT FOR 12500 CASTLEBRIDGE FOR LAST 8 YEARS			4/7/2021 VIA EMAIL	NO	YES	NO	00 HRS 30 MIN ACCUM 1 HRS 00 MIN
73	DRAKE	YOLANDRA	4/5/2021	COPY OF CFS FOR 21-3428			4/5/2021 VIA PU	NO	YES	NO	00 HRS 5 MIN ACCUM 00 HRS 5 MIN
74	US DISTRCT COURT		4/7/2021	COPY OF ARREST RECORD FOR KELLEY, MARGARET (ANN)			4/21/2021 VIA EMAIL	NO	YES	NO	5 HRS 00 MIN ACCUM 5 HRS 00 MIN
75	MANUEL	CHANEKA	4/8/2021	COPY OF ARREST REPORT FROM 2017			4/14/2021 VIA EMAIL	NO	YES	NO	2 HRS 00 MIN ACCUM 2 HRS 00 MIN
76	SULLO	SULLO	4/12/2021	COPY OF LAST 2 WEEKS OF CITATIONS ISSUED			4/26/2021 VIA EMIAL	NO	YES	NO	00 HRS 30 MIN ACCUM 7 HRS 30 MIN
77	PHILLIPS	R.K. LAW FIRM	4/14/2021	COPIES OF 911 FOR ACCIDENT 21-4011 HCSO WORKED FATALITY.	SENT TO AG'S OFFICE. OPEN CASE WITH HCSO 7/13/221 WITHHOLD PER AG OFFICE		4/26/2021				2 HRS 00 MIN ACCUM 2 HRS 00 MIN
78	MAXIE	MAGAN	4/26/2021	COPY OF 21-3969			4/27/2021 VIA EMAIL	NO	YES	NO	00 HRS 30 MIM ACCUM 00 HRS 30 MIN
79	JACOBS	ALEDRA	4/26/2021	COPY OF 18-19180			4/26/2021 VIA EMAIL	NO	YES	NO	2 HRS 00 MIN ACCUM 2 HRS 00 MIN
80	LEXUS	NEXUS	5/3/2021	LAST MONTH OF CITATION ISSUED			5/11/2021 VIA EMAIL	NO	YES	NO	00 HRS 30 MIN ACCUM 4 HRS 30 MIN
81	SULLO	SULLO	5/4/2021	LAST 2 WEEKS OF CITATIONS ISSUED			5/11/2021 VIA EMAIL	NO	YES	NO	00 HRS 30 MIN ACCUM 8 HRS 00 MIN
82	SYDNOR	COURTNEY	5/5/2021	19-13884 COPY OF 911, CRASH REPORT CALL NOTES, CAR VIDEO SCENE PHOTOS, EMS RECORDS. WITNESS STATEMENTS.			5/19/2021 VIA EMAIL	NO	YES	NO	2 HRS 00 MIN ACCUM 2 HRS 00 MIN
83	BEAZLEY	MERILEE	5/10/2021	COPY OF CFS FOR WELFARE CHECK ON 5/9/2021		$3.00 REC PAYMENT 6/14/2021 CHECK # 41324	5/19/2021 VIA EMAIL	NO	YES	NO	2 HRS 00 MIN ACCUM 2 HRS 10 MIN
84	SINGLETON	THERESE	5/18/2021	COPY OF DASH CAM FOR ACCIDENT 21-3736			6/2/2021 VIA MAIL CRRR# 7016 0750 0000 5549 8249	NO	YES	NO	2 HRS 00 MIN ACCUM 2 HRS 00 MIN
85	HOPPING LAW	GROUP	5/18/2021	COPY OF UCW ARREST ON 9/14/1985 & 9/15/1985 FOR SIMMONS, JAMES HERSCHEL DOB 9/17/1964			5/27/2021 VIA EMAIL	NO	YES	NO	2 HRS 00 MIN ACCUM 2 HRS 00 MIN
86	RD	REPORTS	5/26/2021	COPY OF DASH CAM FOR ACCIDENT 20-17571 ON 12/19/2020		$3/00 REC PAYMENT ON 6/14/2021 CHECK # 3494	6/7/2021 VIA MAIL CRRR# 7016 0750 0000 5549 8232	NO	YES	NO	2 HRS 00 MIN ACCUM 2 HRS 00 MIN
87	SULLO	SULLO	5/26/2021	LAST 2 WEEKS OF CITATIONS ISSUED			6/2/2021 VIA EMAIL	NO	YES	NO	00 HRS 30 MIN ACCUM 8 HRS 30 MIN

	FEE SMITH	SHARP LLC	6/1/2021	DASH CAM, BWC, STATEMENTS, 911 RECORDINGS OF CRASH 20-4545			6/7/2021 VIA EMAIL	NO	YES	NO	00 HRS 30 MIN ACCUM 00 HRS 30 MIN
89	LEXUS	NEXUS	6/1/2021	LAST MONTH OF CITATION ISSUED			6/2/2021 VIA EMAIL	NO	YES	NO	00 HRS 30 MIN ACCUM 5 HRS 00 MIN
90	DEFENDME	TEXAS	6/7/2021	COPY OF WG FOR 21-6215			6/16/2021 VIA CRRR # 7016 0750 0000 5549 8188	YES	YES	NO	2 HRS 00 MIN ACCUM 2 HRS 00 MIN
91	HUYNH LAW	FIRM	6/8/2021	COPY OF WG FOR ACCIDENT 21-5769	SENT TO AG'S OFFICE. OPEN CASE WITH HCDAO FSRA ACCIDENT 8/17/2021 WITHHOLD PER AG OFFICE		6/16/2021 VIA EMAIL	YES	NO	YES	2 HRS 00 MIN ACCUM 4 HRS 00 MIN
92	CASTAGNA	SCOTT	6/8/2021	COPY OF 911/PHONE, WITNESS STATEMENTS, VIDEOS FOR ACCIDENT 19-5854			6/16/2021 VIA CRRR # 7016 0750 0000 5549 8195	NO	YES	NO	2 HRS 00 MIN ACCUM 2 HRS 00 MIN
93	SULLO	SULLO	6/9/2021	LAST 2 WEEKS OF CITATIONS ISSUED			6/16/2021 VIA EMAIL	NO	YES	NO	00 HRS 30 MIN ACCUM 9 HRS 00 MIN
94	AMARO	LAW FIRM	6/10/2021	COPIES OF 911 CALL FOR ACCIDENT 21-5996 IN PAPER AND AUDIO FORMAT	SETN TO AG'S OFFICE. OPEN CASE WITH HCDAO DWI ARREST PER OLSEN & OLSEN 8/23/2021 AG RULING WITHHOLD		6/21/2021 VIA EMAIL COPY OF AG REQUEST LETTER	YES	NO	YES	2 HRS 00 MIN ACCUM 2 HRS 00 MIN
95	SULLO	SULLO	6/23/2021	LAST 2 WEEKS OF CITATIONS ISSUED			7/7/2021 VIA EMAIL	NO	YES	NO	00 HRS 30 MIN ACCUM 9 HRS 30 MIN
96	SEWELL LAW	FIRM	6/28/2021	COPY OF BWC FOR ACCIDENT 21-7211 THE ENTIRE VIDEO		8/24/2021 CHECK # 8072 $32.40	7/16/2021 VIA US MAIL	NO	YES	NO	21 HRS 00 MIN ACCUM 21 HRS 00 MIN
97	MJ LAW	FIRM	6/28/2021	21-2835 RECOVERY OF STOLEN VEHICLE			7/29/2021 VIA US MAIL	NO	YES	NO	9 HRS 00 MIN ACCUM 9 HRS 00 MIN
98	BEAZLEY	MERRILEE	6/28/2021	COPY OF CFS FOR 14910 LAKEVIEW 21-7509			7/7/2021 VIA EMAIL	NO	YES	NO	00 HRS 30 MIN ACCUM 2 HRS 40 MIN
99	AMARO	LAW FIRM	6/30/2021	COPY OF 911 ON ACCIDENT 21-2330			7/7/2021 VIA EMAIL	NO	YES	NO	00 HRS 30 MIN ACCUM 2 HRS 30 MIN
100	LEXIUS	NEXIUS	7/2/2021	LAST MONTH OF CITATIONS ISSUED			7/7/2021 VIA EMAIL	NO	YES	NO	00 HRS 30 MIN ACCUM 5 HRS 30 MIN
101	DUNN	KIRK	7/12/2021	COPY OF 21-5286 21-5689			7/13/2021 VIA EMAIL	NO	YES	NO	00 HRS 30 MIN ACCUM 00 HRS 30 MIN
102	SULLO	SULLO	7/14/2021	LAST 2 WEEKS OF CITATIONS ISSUED			7/28/2021 VIA EMAIL	NO	YES	NO	00 HRS 30 MIN ACCUM 10 HRS 00 MIN
103	GREWAL	RUHEE	7/19/2021	CFS FROM 1/1/2021 TO PRESENT DAY FOR 8655 JONES RD # 602 INCLUDING 911 CALLS			7/28/2021 VIA EMAIL	NO	YES	NO	2 HRS 00 MIN ACCUM 2 HRS 00 MIN
104	LOVE	JARON	7/26/2021	COPY OF ARREST FROM JUNE AND JULY DOB 6/25/1994			7/26/2021 VIA PU	NO	YES	NO	00 HRS 10 MIN ACCUM 00 HRS 10 MIN
105	CAROLYN	BATILLA	8/2/2021	COPY OF CHILD ABUSE CASE 16305 LAKEVIEW DR FROM THE YEAR 2020	8/12 @ 1300 SENT TEST EMAIL TO VERIFY EMAIL ADDRESS. LEFT VM		8/18/2021 VIA EMAIL	NO	YES	NO	2 HRS 00 MIN ACCUM 2 HRS 00 MIN
106	RASHON	MURRILL	8/3/2021	COMPLETE INVESTIGATIVE FILE ON ACCIDENT 18-18453			8/11/2021 VIA EMAIL	NO	YES	NO	00 HRS 20 MIN ACCUM 9 HRS 20 MIN
107	LEXUS	NEXUS	8/4/2020	LAST MONTH OF TICKETS ISSUED			8/12/2021 VIA EMAIL	NO	YES	NO	00 HRS 30 MIN ACCUM 5 HRS 30 MIN
108	SULLO	SULLO	8/9/2021	LAST 2 WEEKS OF CITTATIONS ISSUED			8/12/2021 VIA EMAIL	NO	YES	NO	00 HRS 30 MIN ACCUM 10 HRS 30 MIN
109	REYNOLDS	CALEY	8/10/2021	ANY REPORTS FILED FROM 5/23/2021 or 2/18/2011 @ 16222 Singapore St. or 8655 Jones Rd. @ 2322	8/19/2021 SEND TO CITY ATTORNEY						3 HRS 00 MIN ACCUM 3 HRS 00 MIN
110	JONES	EDDIE	8/10/2021	COPY OF ACCIDENT 21-7083			8/10/2021 VIA EMAIL	NO	YES	NO	00 HRS 10 MIN ACCUM 00 HRS 10 MIN
111	CANTU	TATIANA	8/12/2021	COPY O POLICE VISIT TO APT 12613 SEATTLE SLEW # 4103			8/18/2021 VIA EMAIL	NO	YES	NO	00 HRS 45 MIN ACCUM 00 HRS 45 MIN
112	SMITH	JENNIFER	8/12/2021	COPY OF CFS FOR 16005 JUNEAU 2/2020			8/18/2021 VIA EMAIL	NO	YES	NO	00 HRS 20 MIN ACCUM 00 HRS 20 MIN
113	THIESSEN	LAW FIRM	8/17/2021	COPY OF 911 TRANSCRIPT FOR 7/24/2021 2100008777 ARREST ON ROSAS-SANCHEZ, BENJAMIN	8/19/2021 SENT TO AG OFFICE OPEN CASE WITH THE HCDAO		8/19/2021 VIA EMAIL AG LETTER	YES	NO	YES	00 HRS 45 MIN ACCUM 00 HRS 45 MIN
114	WATSON	ROSEMARY	8/17/2021	COPY OF CFS LAST 2 YEARS @ 16025 CRAWFORD STREET			8/19/2021 VIA EMAIL AG LETTER	NO	YES	NO	00 HRS 10 MIN ACCUM 00 HRS 10 MIN
115	SULLO	SULLO	8/18/2021	LAST 2 WEEKS OF CITTATIONS ISSUED			8/31/2021 VIA EMAIL	NO	YES	NO	00 HRS 20 MIN ACCUM 11 HRS 00 MIN
116	RYAN	KATIE	8/18/2021	COPY OF AINCIDENT FOR 7/27/2021 @ 16634 NW FREEWAY DAMAGED CENTERPOINT EQUIPMENT			8/31/2021 VIA EMAIL	NO	YES	NO	00 HRS 20 MIN ACCUM 00 HRS 20 MIN
117	SCHAEFER	STEVEN	8/23/2021	COPY OF ACCIDENT REPORT, OFFENSE REPORT, ARREST REPOR FOR CASE# 21-6838			8/31/2021 VIA EMAIL	NO	YES	NO	1 HRS 20 MIN ACCUM 1 HRS 20 MIN
118	GREEN	ALGARITTA	8/31/2021	COPY OF PHOTOS FROM 21-4839 B TO B		$3.00	8/31/2021 VIA PU	NO	YES	NO	00 HRS 20 MIN ACCUM 00 HRS 20 MIN

CITY OF JERSEY VILLAGE
MUNICIPAL COURT
COLLECTIONS 2021

	CITY PORTION			RESTRICTED FUND				STATE & OMNI & COLLECTIONS	
MONTH	CITY	WARRANT	CITY PORTION	COURT	COURT	JUDICIAL	CHILD	PORTION	TOTAL
	FINES	COLLECTION	OMNI FEES	SEC. FUND	TECH. FEE	EFF. FEE	SAFETY	FEES	COLLECTION
Jan	$39,809.59	$5,604.03	$385.07	$972.17	$955.89	$71.17	$0.00	$29,193.23	$76,991.15
Feb	$44,502.81	$9,359.24	$640.00	$948.10	$1,023.11	$105.46	$25.00	$36,224.33	$92,828.05
Mar	$82,094.37	$15,940.64	$1,023.34	$1,817.32	$1,937.99	$186.36	$0.00	$65,010.81	$168,010.83
Apr	$46,408.00	$6,843.47	$553.60	$1,175.70	$1,154.29	$88.50	$75.00	$37,197.57	$93,496.13
May	$41,488.97	$6,815.81	$556.00	$1,017.31	$1,031.56	$91.31	$0.00	$34,597.49	$85,598.45
June	$43,488.45	$7,153.95	$548.00	$1,001.30	$1,011.36	$82.30	$25.00	$33,139.52	$86,449.88
July	$42,787.57	$6,237.45	$472.00	$1,165.70	$1,113.67	$80.10	$50.00	$34,267.81	$86,174.30
Aug	$42,406.69	$5,693.83	$440.00	$1,129.25	$1,078.23	$75.75	$0.00	$33,242.11	$84,065.86
Sept									
Oct									
Nov									
Dec									
Totals	**$382,986.45**	**$63,648.42**	**$4,618.01**	**$9,226.85**	**$9,306.10**	**$780.95**	**$175.00**	**$302,872.87**	**$773,614.65**

GULAR SESSION CITY COUNCIL MEETING PACKET FOR THE MEETING TO BE HELD ON SEPTEMBER 20,

Municipal Courts
Activity Detail
August 1, 2021 to August 31, 2021

100.0 Percent Reporting Rate
1 Reports Received Out of a Possible 1

Court: Jersey Village

CRIMINAL CASES

	Traffic Misdemeanors			Non-Traffic Misdemeanors			
	Non-Parking	Parking	City Ordinance	Penal Code	Other State Law	City Ordinance	Total
Cases Pending 8/1/2021:							
Active Cases	15,537	226	0	108	1,350	158	17,379
Inactive Cases	17,590	38	0	155	5,551	52	23,386
Docket Adjustments	0	0	0	0	0	0	0
Cases Added:							
New Cases Filed	453	2	0	2	14	0	471
Cases Reactivated	140	1	0	5	66	0	212
All Other Cases Added	0	0	0	0	0	0	0
Total Cases on Docket	**16,130**	**229**	**0**	**115**	**1,430**	**158**	**18,062**
Dispositions:							
Dispositions Prior to Court Appearance or Trial:							
Uncontested Dispositions	63	0	0	1	4	0	68
Dismissed by Prosecution	121	1	0	2	16	0	140
Total Dispositions Prior to Court Appearance or Trial	184	1	0	3	20	0	208
Dispositions at Court Appearance or Trial:							
Convictions:							
Guilty Plea or Nolo Contendere	0	0	0	0	0	0	0
By the Court	1	0	0	0	0	0	1
By the Jury	0	0	0	0	0	0	0
Acquittals:							
By the Court	0	0	0	0	0	0	0
By the Jury	0	0	0	0	0	0	0
Dismissed by Prosecution	17	0	0	0	0	0	17
Total Dispositions at Court Appearance or Trial	18	0	0	0	0	0	18
Compliance Dismissals:							
After Driver Safety Course	21	---	---	---	---	---	21
After Deferred Disposition	40	0	0	1	0	0	41
After Teen Court	0	0	0	0	0	0	0
After Tobacco Awareness Course	---	---	---	---	0	---	0
After Treatment for Chemical Dependency	---	---	---	0	0	---	0
After Proof of Financial Responsibility	11	---	---	---	---	---	11
All Other Transportation Code Dismissals	44	0	0	0	0	0	44
Total Compliance Dismissals	116	0	0	1	0	0	117
All Other Dispositions	0	0	0	0	3	0	3
Total Cases Disposed	**318**	**1**	**0**	**4**	**23**	**0**	**346**
Cases Placed on Inactive Status	3	0	0	0	1	0	4
Cases Pending 8/31/2021:							
Active Cases	15,809	228	0	111	1,406	158	17,712
Inactive Cases	17,453	37	0	150	5,486	52	23,178
Show Cause and Other Required Hearings Held	36	0	0	0	2	0	38
Cases Appealed:							
After Trial	0	0	0	0	0	0	0
Without Trial	0	0	0	0	0	0	0

REGULAR SESSION CITY COUNCIL MEETING PACKET FOR THE MEETING TO BE HELD ON SEPTEMBER 20, 2021

Municipal Courts
Activity Detail
August 1, 2021 to August 31, 2021

100.0 Percent Reporting Rate
1 Reports Received Out of a Possible 1

Court: Jersey Village

CIVIL/ADMINISTRATIVE CASES

	Total
Cases Pending 8/1/2021:	
Active Cases	0
Inactive Cases	0
Docket Adjustments	0
Cases Added:	
New Cases Filed	0
Cases Reactivated	0
All Other Cases Added	0
Total Cases on Docket	**0**
Dispositions:	
Uncontested Civil Fines or Penalties	0
Default Judgments	0
Agreed Judgments	0
Trial/Hearing by Judge/Hearing Officer	0
Trial by Jury	0
Dismissed for Want of Prosecution	0
All Other Dispositions	0
Total Cases Disposed	**0**
Cases Placed on Inactive Status	0
Cases Pending 8/31/2021:	
Active Cases	0
Inactive Cases	0
Cases Appealed:	
After Trial	0
Without Trial	0

JUVENILE/MINOR ACTIVITY

	Total
Transportation Code Cases Filed	0
Non-Driving Alcoholic Beverage Code Cases Filed	0
Driving Under the Influence of Alcohol Cases Filed	0
Drug Paraphernalia Cases Filed	0
Tobacco Cases Filed	0
Truant Conduct Cases Filed	0
Education Code (Except Failure to Attend) Cases Filed	0
Violation of Local Daytime Curfew Ordinance Cases Filed	0
All Other Non-Traffic Fine-Only Cases Filed	0
Transfer to Juvenile Court:	
Mandatory Transfer	0
Discretionary Transfer	0
Accused of Contempt and Referred to Juvenile Court (Delinquent Conduct)	0
Held in Contempt by Criminal Court (Fined or Denied Driving Privileges)	0
Juvenile Statement Magistrate Warning:	
Warnings Administered	0
Statements Certified	0
Detention Hearings Held	0
Orders for Non-Secure Custody Issued	0
Parent Contributing to Nonattendance Cases Filed	0

REGULAR SESSION CITY COUNCIL MEETING PACKET FOR THE MEETING TO BE HELD ON SEPTEMBER 20, 2021

Municipal Courts
Activity Detail
August 1, 2021 to August 31, 2021

100.0 Percent Reporting Rate
1 Reports Received Out of a Possible 1

Court: Jersey Village

ADDITIONAL ACTIVITY

	Number Given	Number Requests for Counsel
Magistrate Warnings:		
Class C Misdemeanors	0	---
Class A and B Misdemeanors	0	0
Felonies	0	0

	Total
Arrest Warrants Issued:	
Class C Misdemeanors	0
Class A and B Misdemeanors	0
Felonies	0
Capiases Pro Fine Issued	0
Search Warrants Issued	0
Warrants for Fire, Health and Code Inspections Filed	0
Examining Trials Conducted	0
Emergency Mental Health Hearings Held	0
Magistrate's Orders for Emergency Protection Issued	0
Magistrate's Orders for Ignition Interlock Device Issued	0
All Other Magistrate's Orders Issued Requiring Conditions for Release on Bond	0
Driver's License Denial, Revocation or Suspension Hearings Held	0
Disposition of Stolen Property Hearings Held	0
Peace Bond Hearings Held	0
Cases in Which Fine and Court Costs Satisfied by Community Service:	
Partial Satisfaction	0
Full Satisfaction	0
Cases in Which Fine and Court Costs Satisfied by Jail Credit	0
Cases in Which Fine and Court Costs Waived for Indigency	0
Amount of Fines and Court Costs Waived for Indigency	$ 0
Fines, Court Costs and Other Amounts Collected:	
Kept by City	$ 76,279
Remitted to State	$ 7,787
Total	$ 84,066

REGULAR SESSION CITY COUNCIL MEETING PACKET FOR THE MEETING TO BE HELD ON SEPTEMBER 20, 2021

CITY OF JERSEY VILLAGE
MUNICIPAL COURT
COURT ROOM ACTIVITIES

DATE	JUDGE/ PROSECUTOR	TOTAL CASES	NO SHOWED	% TO TOTAL	SHOWED	% TO TOTAL	PAYMENT PLAN	% TO TOTAL	DOCKET CLOSED	% TO TOTAL
August 4, 2021	Judge Kisluk	127	42	33%	85	67%	7	8%	38	45%
AM Docket	Marcy McCorvey									
August 4, 2021	Judge Kisluk	20	8	40%	12	60%	1	8%	4	33%
PM Docket	Marcy McCorvey									
August 9, 2021	Judge Harris	3	1	33%	2	67%	0	0%	1	50%
AM Docket	Lance Long									
August 11, 2021	Judge Harris	65	0	0%	65	100%	1	2%	11	17%
AM Docket	Marcy McCorvey								.	
August 11, 2021	Judge Harris	58	0	0%	58	100%	1	2%	10	17%
PM Docket	Marcy McCorvey									
August 25, 2021	Judge Chancia	12	5	42%	7	58%	0	0%	3	43%
AM Docket	Marcy McCorvey									
TOTAL		**285**	**56**	20%	**229**	80%	**10**	4%	**67**	29%

GULAR SESSION CITY COUNCIL MEETING PACKET FOR THE MEETING TO BE HELD ON SEPTEMBER 20,

Location Listing

CITY OF JERSEY VILLAGE

9/3/2021

Location Listing By Location

Location Details For Dates From 08/01/2021 To 08/31/2021

Citation #	Location
Ran Stop Sign	**4**
C0064417	Village Dr - N
C0064507	15600 Block Congo Ln - N
C0064509	15600 Block Congo Ln - N
C0064444	16518 Block Jersey Ln - N
Speeding	**2**
C0064536	16500 Block Jersey Ln - N
C0064424	8400 Block Rio Grande Dr - N
Speeding - School Zone	**2**
C0064506	15500 Block Congo Ln - N
C0064501	7600 Block Solomon St - N
Report Totals	**8**

REGULAR SESSION CITY COUNCIL MEETING PACKET FOR THE MEETING TO BE HELD ON SEPTEMBER 20,

JERSEY VILLAGE MUNICIPAL COURT ACTIVITY REPORT

GENERAL PROCEEDS
FY 2018, 2019, 2020

	2018-2019	2019-2020	2020-2021
October	100,832	78,416	49,309
November	87,251	61,065	51,540
December	84,302	67,241	41,041
January	90,781	68,972	45,799
February	110,193	90,758	54,502
March	122,971	87,719	99,058
April	92,606	39,486	53,785
May	78,291	29,873	48,861
June	82,371	48,286	51,190
July	88,193	51,684	49,497
August	76,274	49,447	48,597
September	88,185	59,882	
FY Total	**$ 1,102,249**	**$ 732,830**	**$ 593,179**
Average Per Month	$ 91,854	$ 61,069	$ 53,925

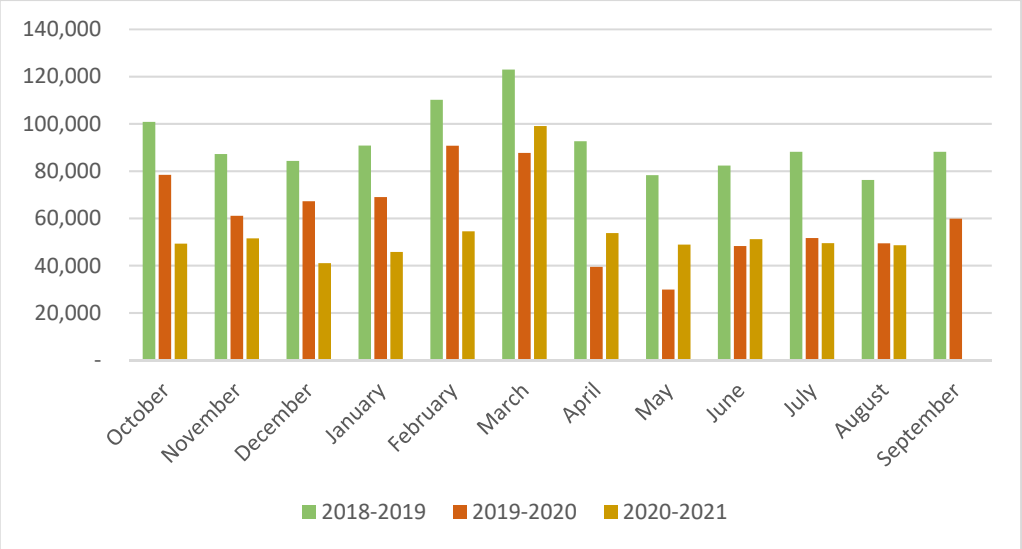

REGULAR SESSION CITY COUNCIL MEETING PACKET FOR THE MEETING TO BE HELD ON SEPTEMBER 20, 2021

CITY OF JERSEY VILLAGE, TEXAS

16327 Lakeview Drive, Jersey Village, TX 77040

713-466-2100 (office) 713-466-2140 (fax)

Public Works Status Report for the Month of August, 2021

General –

- Homeowner asked for a 4-way stop at senate and Congo where the accident was last week. Will discuss with Chief and City Manager. We were thanked for the 4-way at Australia and Congo.
- Rec'd followup from CoH Water for GIS data and GPS coordinates of Plant. Responded to CoH request for GIS boundaries and GPS coordinates for the inter-connect and metering. Opens new questions as to where exactly the interconnect is.
- Neighbor wishes to subdivide their property. Working on details.
- Water issues on Wall St project, Soloman near high school, being resolved and repaired 8/30. A large amount of water loss. Capped at 9PM Saturday night. Great work done by the Public Works guys on overtime.
- Lost 2 blowers at the plant and will replace them asap.
- Wall St/Berm projects moving ahead well.
- Will bid out electricity rate contract in 2022.
- Brown & Root study came back indicating very serious issues of mold at the water plant, must be remediated due to Black mold. Obtaining estimate.
- Pressure relief valve installed over Steepleway bayou! Needed new valve and line stops installed.
- TCEQ issues on as-built dwgs being worked on with a number of potential remedies. We are close to engaging with Suez to perform the as-builts for the Elev. Storage towers. We are vetting them and their proposed deliverable.
- Elev. Tank rehab moving forward after Pre-Con. Will need work to fix valves prior to commencing work. Working with Buyboard contractor to address. Met with elevated storage tower folks this month. We have Issues with preparations, valves aren't working. They filed permit with Texas. In the meantime we did the pre-con on 8/20/21.
- The urgency to begin addressing our water usage and water losses is rising.
- Moving ahead on CRS recerts for 2021. Initial paperwork sent to CRS consultant.
- Working on personnel issues with Streets staff.
- Assisting Nearby city with their staffing needs on an as needed basis due to staffing losses.
- Trying to bring Code Enforcement person in to start 8/31.
- The City's Low water pressure program is complete and will be submitted on line by Public Works.
- The City's Emergency Preparation Plan is complete and is being submitted on line by Public Works.
- Talked to contractor for Jack-in-the-box and Chevron for grass cutting. They will try to keep them clean and tidy.
- Responded to follow-up questions from TCEQ on submission from 12/2019.
- TCEQ renewal letters sent by RSB for the 2 WWTP's. We are in waiting mode until renewal due 3/2022.
- New map added to newsletter showing the flow of drainage after the Wall St. project completes.
- Fleet Dept. was compromised with Covid. Jose managed it so we did not have any major hiccups.
- Working on personnel issues with Streets staff.
- Nearby Municipality called for assistance for staffing on weekdays and weekends. We will assist as we can.
- Working on Flock cameras for PD. 3 poles have bad ballasts. Prism is trying to find out who should fix them, Flock or them. I believe Prism just took the onus yesterday. Public Works passed the info to Chief Riggs for daily oversight.
- Construction meeting for Berm/Wall St. conducted, moving ahead nicely, handling homeowner complaints and questions daily.

- Met with arborist on tree damaged by construction crew on Wall St. He said it can't be saved. We recommended going to the BOA for a waiver on placing a new live oak in the ROW.
- Discussed several generator installs with homeowners. City generator RFP meeting this week, top candidate selected.
- Complaints/questions from several owners on Capri/Crawford on Wall St. Referred to B&S. Jim spoke to them and explained the benefits of the project.
- Congo plant mold – B&R is inspecting. They will perform a study to identify the issue.
- Sinkhole at Ashburton and Lakeview has been handled. We repaired the utilities and had cores driven to investigate the sinkhole void. Results achieved, the sinkhole has been abated with the replacement of the water and storm lines and related backfilling.
- Working with developers multiple new developments,
- Repair on fixing power pole at Congo, it was leaning badly in the soft soil.

Streets –

- Street sweeping on Tuesdays and Thursdays. The sweeper map is posted on the City's website.
- Mosquito spraying ongoing.
- Schedule meter repairs several locations.
- Daily / weekly service orders
- Meters going in for TxDOT. We assist and monitor.
- Grinding sidewalks for safety.

Plants –

- Working on prep for elevated storage tower rehab of towers. Need as-built drawings. We will develop these and respond. Performing research in order to respond.
- Flushing various locations. Continuing daily Operations and repairs
- Continuing daily service calls.
- Routine rounds, checked residuals throughout the city
- Continue with the Grease interceptor inspections and preparing for expansion of FOG program..
- Continue with service calls

Fleet –

- Trying to return to normal after Covid issues.

REGULAR SESSION CITY COUNCIL MEETING PACKET FOR THE MEETING TO BE HELD ON SEPTEMBER 20, 2021

Jersey Meadow Golf Course
Monthly Report

FY 2020-2021													
	October	November	December	January	February	March	April	May	June	July	August	September	YTD Totals
Rounds played	4199	3833	3206	3215	2280	3783	4087	2324	3072	2821	2836		35656
Tournament Rounds	432	411	259	331	305	440	529	124	203	191	291		3516
Range buckets	2502	2139	1223	1788	1486	2241	2466	1307	1502	1498	1382		19534
Unearned Revenue	(1,828.70)	-1677.03	-4123.64	2,577.07	2064.97	-958.42	206.90	-92.10	575.09	-127.91	-155.38		-3539.15
Star Memberships	2,377.46	2,736.33	5,954.76	7,521.62	1,915.74	4,635.35	3,159.33	1,995.45	4,803.60	3,233.89	3,180.76		41,514.29
Green Fees	141,058.90	124,752.60	109,221.89	105,315.36	71,692.37	119,546.11	121,128.32	62,875.00	80,447.99	80,645.70	81,404.77		1,098,089.01
Tournament Fees	13,045.47	13,682.26	8,298.51	10,179.60	9,200.71	14,142.00	18,269.46	2,903.42	4,212.42	4,527.46	8,223.60		106,684.91
Range Fees	17,672.31	16,345.86	11,579.13	15,033.71	11,146.53	19,095.87	20,049.84	13,537.90	12,704.06	14,081.06	11,890.88		163,137.15
Club Rental	390.00	400.00	200.00	225.00	275.00	648.00	680.00	468.75	500.00	495.00	605.00		4,886.75
Sales of Merchandise	17,709.62	19,202.56	24,247.44	13,485.64	14,168.19	24,726.37	26,656.07	13,570.96	18,020.66	18,184.21	18,934.56		208,906.28
Concession Fees	6,097.49	4,843.35	3,944.58	3,819.87	2,830.15	5,123.29	5,450.52	3,378.74	4,157.36	3,740.46	3,714.91		47,100.72
Miscellaneous Fees	2,450.00	2,530.00	3,888.25	4,914.50	2,224.50	3,717.50	1,762.50	407.50	937.50	785.70	960.51		24,578.46
Total Income	198,972.55	182,815.93	163,210.92	163,072.37	115,518.16	190,676.07	197,362.94	99,045.62	126,358.68	125,565.57	128,759.61	-	1,691,358.42
Weather Totals	1RO/1CM	2RO/2W/1H	4RO/4W/1H	4RO/9W	7RO/7W	5W/1CM	1RO/4W/1CM	5RO/9W/5CM	3RO/5W	1RO/13W/1H	5WD		28RO/63W/8CM/3H
Income Per Round	$42.85	$42.83	$46.57	$43.14	$43.15	$44.28	$42.03	$39.68	$36.94	$40.66	$40.21	$0.00	$42.21
FY 2019-2020													
	October	November	December	January	February	March	April	May	June	July	August	September	YTD Totals
Rounds played	2822	2566	3505	2388	2490	2854	119	4916	4325	4935	4516	4202	39638
Tournament Rounds	447	418	203	289	384	159	0	148	354	252	314	330	3298
Range buckets	1508	1433	1478	1209	1581	1335	0	2205	1892	2053	2105	2245	19044
Unearned Revenue	400.91	-317.89	-2154.02	888.22	2151.38	-869.36		-1196.43	(2,268.55)	-886.59	-1067.16	-2251.51	-7571.00
Star Memberships	5,042.78	2,178.46	4,127.77	4,402.75	3,400.19	8,901.18		7,176.37	6,040.07	4,346.20	3,191.19	5,543.08	54,350.04
Green Fees	80,370.21	78,523.77	110,211.22	60,955.71	72,572.18	82,188.50	2,954.35	163,982.17	138,989.99	157,398.71	147,675.64	137,051.64	1,232,874.09
Tournament Fees	13,053.96	12,342.40	5,437.16	8,154.89	10,871.77	4,486.89		3,982.41	10,281.47	7,587.12	8,601.62	10,372.60	95,172.29
Range Fees	10,699.65	8,606.44	13,836.14	7,972.55	10,145.66	10,230.65		15,918.29	13,079.70	15,253.98	15,050.54	17,622.61	138,416.21
Club Rental	300.00	320.00	360.00	320.00	575.00	545.00			505.00	350.00	525.00	400.00	4,200.00
Sales of Merchandise	16,110.06	14,074.31	18,896.41	11,981.09	13,269.78	11,835.19	224.37	21,452.21	22,601.63	23,408.83	20,116.55	24,693.77	198,664.20
Concession Fees	3,716.48	3,343.51	3,615.00	3,134.23	3,516.51	3,098.47	94.01	5299.63	4,980.36	5,047.86	5,384.34	5,803.02	47,033.42
Miscellaneous Fees	424.00	1,253.00	675.00	4,824.00	2,533.00	2,230.00	60.00	900.00	940.00	2,467.50	3,445.00	2,735.00	22,486.50
Total Income	130,118.05	120,324.00	155,004.68	102,633.44	119,035.47	122,646.52	3,332.73	217,514.65	195,149.67	214,973.61	202,922.72	201,970.21	1,785,625.75
Weather Totals	4W/2RO/1CM	1W/5RO/1CM/1H	1W/1RO/1H	13W/5RO/0CM	5W/6RO/1CM	5W/1CM/7CVD-19	27 CVD-19	1W/2RO/1CM	1W/3RO/1M	4W/1RO/1M	3W/2RO/1M	1W/3RO/1H	39W/29RO/8CM/4H/34CV
Income Per Round	$38.14	$39.70	$41.27	$36.36	$39.49	$38.04	$28.01	$41.77	$40.90	$40.78	$41.57	$43.84	$40.50
Fy 2018-2019													
	October	November	December	January	February	March	April	May	June	July	August	September	YTD Totals
Rounds played	2389	2319	2117	1993	1873	3241	4169	3196	3346	4392	3809	2770	35614
Tournament Rounds	582	393	299	257	297	367	526	636	682	304	304	331	4978
Range buckets	1265	955	970	1031	1046	1284	1368	1181	1591	1606	1544	1351	15192
Unearned Revenue	-1472.95	-1668.62	-3443.07	1,430.45	60.48	-134.21	504.86	-1359.80	(2,370.72)	-229.23	-201.60	-865.64	(9,750.05)
Star Memberships	2,094.31	1,601.02	3,748.62	2,358.88	1,996.45	6,057.91	5,552.78	3475.34	2,823.76	4,319.36	4588.93	4294.91	42,912.27
Green Fees	65,328.60	52,816.14	68,371.79	42,809.31	44,185.56	85,369.39	103,277.89	88751.10	96,727.91	121,034.15	104445.40	77863.67	950,980.91

REGULAR SESSION CITY COUNCIL MEETING PACKET FOR THE MEETING TO BE HELD ON SEPTEMBER 20,

Jersey Meadow Golf Course
Monthly Report

Tournament Fees	17,318.04	11,240.60	7,232.24	6,767.13	7,847.31	11,481.95	16,021.51	17097.50	21,215.16	8,816.48	9044.27	10591.82	144,674.01
Range Fees	6,576.03	4,475.29	9,669.19	5,207.18	6,205.01	7,889.27	7,087.90	5831.73	7,207.86	9,019.33	8733.55	7613.81	85,516.15
Club Rental	624.66	325.00	200.00	300.00	240.00	220.00	500.00	480.00	660.00	440.00	260.00	280.00	4,529.66
Sales of Merchandise	15,603.17	12,923.62	11,727.68	7,095.43	14,064.14	14,104.40	20,214.49	19090.89	21,910.22	18,239.02	22489.56	16744.87	194,207.49
Concession Fees	4,576.77	3,087.86	2,869.59	2,652.55	2,637.97	4,628.91	4,886.33	4433.14	4,587.18	4,734.94	4221.99	3379.30	46,696.53
Miscellaneous Fees	1,236.00	258.00	723.00	2,475.00	1,538.94	3,071.00	1,389.00	670.00	1,019.00	570.00	605.00	590.00	14,144.94
Total Income	$111,884.63	85,058.91	101,099.04	71,095.93	78,775.86	132,688.62	159,434.76	138,469.90	153,780.37	166,944.05	154,187.10	120,492.74	$1,473,911.91
Weather Totals	7W / 3RO	11W/4RO/1H	11W/2RO/1H	15W/3RO	10W/3RO	5W	7W	6W/1RO/1CM	6W/2RO	2W/1CM	4W	5W/3RO/1CM	89W/21RO3CM/2H
Income Per Round	$37.45	$31.39	$41.72	$29.91	$35.35	$35.13	$32.67	$35.58	$38.07	$34.68	$36.42	$37.75	$35.49

2021
GULAR SESSION CITY COUNCIL MEETING PACKET FOR THE MEETING TO BE HELD ON SEPTEMBER 20,

Jersey Meadow Golf Course
Monthly Report

FY 2017 - 2018													
	October	November	December	January	February	March	April	May	June	July	August	September	YTD Totals
Rounds played	3,102	3,070	2,024	1,729	1,589	3470	3759	3530	3086	3,189	3,797	2,067	34,412
Tournament Rounds	555	369	275	317	262	374	449	585	491	307	319	228	4,531
Range buckets	1,391	1,398	770	895	787	1696	1884	1508	1322	1,280	1,359	852	15,142
Unearned Revenue			-24.63	967.27	-639.7	-367.01	-218.17	-1096.72	-349.85	-1530.91	-278.61	-431.73	-3970.06
Star Memberships	1,083.00	1,075.00	1,177.43	886.16	1,747.32	3,162.05	4,582.19	2,639.33	3,504.48	3,017.77	3,433.05	1038.59	27,346
Green Fees	76,440.71	83,616.18	56,482.97	41,148.61	34,012.15	92,628.33	105,731.34	97,318.89	89,853.79	88,257.01	94,600.16	54,390.33	914,480
Tournament Fees	15,749.55	10,763.90	8,833.94	9,282.22	6,489.84	10,364.94	13,093.08	16,466.79	15,368.94	9,305.25	9,077.39	7,464.76	132,261
Range Fees	6,820.25	7,163.03	5,664.41	4,636.80	4,335.16	10,101.88	9,859.66	9,101.61	7,509.12	7,112.74	7,161.08	4,782.61	84,248
Club Rental	150.00	555.00	430.00	230.00	60.00	420.00	524.66	280.00	460.00	475.52	380.00	200.00	4,165
Sales of Merchandise	16,065.54	15,566.43	10,147.15	8,019.54	10,197.37	17,132.64	16,095.62	18,707.26	14,255.38	15,682.44	14,648.24	9,488.43	166,006
Concession Fees	4,070.46	4,003.81	2,587.61	2,170.15	1,979.37	4,541.22	4,790.23	5,333.66	4,121.71	3,529.24	4,120.95	2,579.58	43,828
Miscellaneous Fees	653.99	210.00	795.00	2,745.00	1,710.00	1,665.00	1,035.00	690.00	490.00	480.00	525.00	190.00	11,189
Total Income	$121,033.50	$122,953.35	$86,093.88	$70,085.75	$59,891.51	$139,649.05	$155,493.61	$149,440.82	$135,213.57	$126,329.06	$133,667.26	$79,702.57	$1,383,523.99
Weather Totals	5W / 1RO	0	6W/4RO/1H	7W/5RO&ICE	5W / 6RO	IW/IRO/2CM	1 CM	4 W	3W / 3 RO	7W / 1 RO	4W / 1RO	16W / 6 RO	58W/28RO/3CM/1H
Income Per Round	$32.80	$35.44	$36.95	$33.35	$31.76	$35.60	$35.91	$35.94	$36.92	$35.71	$31.71	$34.46	$34.82

6/1/2021
GULAR SESSION CITY COUNCIL MEETING PACKET FOR THE MEETING TO BE HELD ON SEPTEMBER 20,

Jersey Meadow Golf Course
Monthly Report

FY 2016 - 2017													
	October	November	December	January	February	March	April	May	June	July	August	September	YTD Totals
Rounds played	2,521	2,355	1,972	1,584	2,223	2,331	3,281	3,253	2,881	2,835	2,057	3,166	30,459
Tournament Rounds	771	472	325	341	336	549	473	812	517	596	310	517	6,019
Range buckets	1,783	1,256	968	632	991	1279	1412	1263	1155	1,295	956	1,286	14,276
Star Memberships	2,235.00	1,570.00	25.00	1,029.00	1,510.00	1,024.00	2,221.00	1,144.00	1,219.00	800.00	620.00	555.00	13,952
Green Fees	71,022.49	65,681.11	50,027.42	38,520.25	61,122.97	55,752.79	88,247.62	87,096.00	74,742.39	73,059.53	53,137.49	79,790.70	798,201
Tournament Fees	23,727.00	15,666.88	9,089.41	9,620.52	9,547.76	15,065.14	15,118.67	25,088.25	15,155.20	19,660.62	8,650.70	16,188.44	182,579
Range Fees	8,258.92	6,360.11	4,774.40	4,514.09	6,347.68	6,640.74	7,981.02	7,154.62	6,139.70	6,290.14	5,154.24	7,231.26	76,847
Club Rental	340.00	260.00	100.00	125.00	275.00	150.00	475.00	450.00	470.00	425.00	375.00	213.86	3,659
Sales of Merchandise	8,480.22	10,003.82	11,483.44	6,450.19	12,081.93	12,342.40	12,562.48	12,120.38	14,895.60	13,280.56	7,315.30	11,177.14	132,193
Concession Fees	3,607.96	2,907.70	2,282.52	1,852.88	2,529.79	3,058.07	4,267.45	4,599.10	3,209.21	5,744.57	2,244.09	3,790.50	40,094
Miscellaneous Fees	60.00	722.47	219.00	5,601.50	1,621.00	1,773.00	1,123.32	540.00	345.00	300.00	390.00	225.00	12,920
Total Income	$117,731.59	$103,172.09	$78,001.19	$67,713.43	$95,036.13	$95,806.14	$131,996.56	$138,192.35	$116,176.10	$119,560.42	$77,886.82	$119,171.90	$1,260,444.72
Weather Totals	2 W	5 W/1CM/1H	4 W/2RO/1H	3 W/7RO	6W/1CM/1RO	3W/5RO/1CM	2W/1CM/3RO	3W/1CM	4W/1CM/2RO	4W/1RO/2CM	6W / 5RO	4W/2RO	46W/28RO/8CM/2H
							10 TT				Harvey		10 TT
Income Per Round	$35.08	$35.94	$33.95	$34.64	$36.55	$32.91	$34.57	$33.71	$33.83	$34.61	$32.64	$32.21	$34.17
FY 2015 - 2016													
	October	November	December	January	February	March	April	May	June	July	August	September	YTD Totals
Rounds played	2,839	2,010	1,964	2,015	2,397	2,561	2,433	2,911	2,591	3,012	1,874	2,215	28,822
Tournament Rounds	89	73	33		154	57	428	571	672	428	430	458	3,393
Range buckets	1,045	528	626	857	1195	1224	1152	1354	1444	1,484	922	1,132	12,963
Star Memberships	2,320.00	1,840.00	2,160.00	2,720.00	3,200.00	2,880.00	3,120.00	3,195.00	4,105.00	4,720.00	1,680.00	2,765.00	34,705
Green Fees	81,461.98	58,415.91	56,870.74	61,260.67	71,371.18	78,811.81	77,316.60	88,465.87	74,355.72	88,449.72	49,618.51	60,651.53	847,050
Tournament Fees	3,507.47	3,480.00	1,600.50		5,307.31	2,457.42	13,699.36	17,393.71	19,728.37	13,160.39	12,453.56	13,837.02	106,625
Range Fees	6,099.17	3,205.02	3,985.47	4,891.36	7,045.93	6,953.50	7,080.21	6,496.23	6,269.88	7,647.03	4,584.13	6,253.36	70,511
Sales of Merchandise	5,520.79	4,143.21	4,484.56	3,588.10	4,733.45	7,385.19	7,318.89	7,988.63	10,044.66	11,428.74	8,048.85	7,391.68	82,077
Concession Fees	3,615.16	2,390.07	2,115.33	2,117.89	2,454.64	2,951.94	3,371.51	4,035.94	3,650.00	3,548.87	2,127.83	2,529.94	34,909
Miscellaneous Income	3,946.41	1,958.57	2,801.66	1,458.15	3,350.88	2,642.18	797.99	75.00	625.00	4,181.00	165.00	45.00	22,047
Total Income	$106,470.98	$75,432.78	$74,018.26	$76,036.17	$97,463.39	$104,082.04	$112,704.56	$127,650.38	$118,778.63	$133,135.75	$78,677.88	$93,473.53	$1,197,924.35
Weather Totals	5 rain	7 rain/1 closed	8 rain/1 closed	6 rain	3 rain	5 rain	6 rain/2 closed	1 A/1 RO/5 rain	1 RO/ 6 rain	2 rain	2 RO / 12 rain	5 rain	74 R / 1 A / 4 closed
Income Per Round	$35.57	$35.33	$35.98	$36.39	$36.95	$38.66	$38.30	$35.74	$35.14	$37.33	$33.42	$33.94	$36.11
FY 2014 - 2015													
	October	November	December	January	February	March	April	May	June	July	August	September	YTD Totals
Rounds played	3,309	2,227	1,938	1,741	1,857	2,353	2,787	2,175	2,559	3,101	2,683	2,788	29,518
Tournament Rounds	282	72	9	82	88	122	86	427	282	24	150	40	1,664
Range buckets	1,205	641	514	662	828	747	1054	570	828	1,119	1,022	1,038	10,228
Star Memberships	2,800.00	1,440.00	2,480.00	3,200.00	3,280.00	3,760.00	4,560.00	4,160.00	5,040.00	5,280.00	3,040.00	3,630.00	42,670
Green Fees	93,432.44	65,090.39	52,482.91	50,493.14	55,649.84	67,830.42	82,135.12	69,453.93	73,951.39	89,770.24	79,091.67	82,386.10	861,768
Tournament Fees	11,123.00	2,937.00	387.00	3,529.00	3,129.71	4,620.00	4,300.00	13,300.96	8,646.00	1,212.00	5,491.00	2,000.00	60,676
Range Fees	7,330.62	3,963.32	3,113.21	3,748.13	5,169.54	4,715.30	6,622.06	3,757.32	5,067.31	6,489.92	5,983.85	6,385.83	62,346
Sales of Merchandise	7,737.66	6,531.42	5,201.81	3,940.79	3,821.79	5,315.21	6,723.45	6,429.09	7,312.73	6,651.59	6,020.07	8,047.46	73,733
Concession Fees	5,320.35	2,303.14	1,699.47	1,673.08	2,006.87	2,573.29	3,161.08	3,508.66	2,945.26	3,050.58	2,780.99	2,863.49	33,886

REGULAR SESSION CITY COUNCIL MEETING PACKET FOR THE MEETING TO BE HELD ON SEPTEMBER 20,

Jersey Meadow Golf Course
Monthly Report

Miscellaneous Income	6,978.24	1,694.18	3,203.26	2,857.26	3,025.80	2,979.57	3,634.69	3,312.38	5,031.37	9,249.57	3,373.41	6,628.33	51,968
Total Income	$134,722.31	$83,959.45	$68,567.66	$69,441.40	$76,083.55	$91,793.79	$111,136.40	$103,922.34	$107,994.06	$121,703.90	$105,780.99	$111,941.21	$1,187,047.06
Weather Totals	3 rain	8 rain/1 closed	8 rain/1 closed	15 weather days	8 weather days	9 rain	8 rain	14 rain	7 rain	1 rain	4 rain	8 rain	93/2
Income Per Round	$36.74	$35.89	$33.94	$36.34	$37.43	$35.57	$37.10	$38.34	$36.24	$37.26	$36.27	$38.30	$36.70

REGULAR SESSION CITY COUNCIL MEETING PACKET FOR THE MEETING TO BE HELD ON SEPTEMBER 20,

Jersey Meadow Golf Course
Monthly Report

FY 2013 - 2014													
	October	November	December	January	February	March	April	May	June	July	August	September	YTD Totals
Rounds played	2,915	2,352	2,125	2,234	2,158	2914	3457	3175	3344	3,457	3,350	2,749	34,230
Tournament Rounds	178	75	0	30	30	95	246	363	203	13	17	44	1,294
Range buckets	1,088	698	720	912	900	842	1506	1307	1212	1,018	1,024	901	12,128
Star Memberships	3,120.00	4,390.00	3,330.00	6,640.00	3,840.00	5,120.00	4,240.00	4,710.00	7,310.00	3,440.00	3,440.00	3,280.00	52,860
Green Fees	78,645.99	63,957.07	54,503.69	59,507.83	61,185.05	83,182.58	100,859.16	89,579.55	95,691.73	97,238.07	97,159.65	76,287.19	957,798
Tournament Fees	6,989.00	2,680.43	0.00	1,316.00	1,209.00	2,534.96	9,242.34	12,779.32	7,574.00	585.00	765.00	1,778.00	47,453
Range Fees	6,647.62	4,336.49	4,162.33	5,026.01	5,483.68	5,532.44	9,420.71	8,235.84	7,269.11	6,702.15	6,660.53	5,748.74	75,226
Sales of Merchandise	6,732.73	4,941.18	4,868.91	3,557.24	4,717.04	7,505.23	9,270.66	8,478.68	7,672.13	7,363.93	7,248.10	5,954.23	78,310
Concession Fees	4,015.08	2,590.27	1,934.64	2,341.60	2,520.77	3,237.75	4,575.36	4,251.76	4,177.83	3,535.74	3,767.37	3,083.69	40,032
Miscellaneous Income	6,106.08	3,660.45	5,745.04	3,590.43	3,913.54	6,608.67	8,326.80	7,177.72	7,189.39	10,967.77	8,019.90	6,743.05	78,049
Total Income	$112,256.50	$86,555.89	$74,544.61	$81,979.11	$82,869.08	$113,721.63	$145,935.03	$135,212.87	$136,884.19	$129,832.66	$127,060.55	$102,874.90	$1,329,727.02
Weather Totals	6 rain	8 rain/1 closed	10 rain/1 closed	9 rain & freeze	12 weather days	8 rain/ice	2 rain	6 rain	6 rain	4 Rain	3 rain	7 rain	81/2
Income Per Round	$35.28	$33.85	$33.51	$33.28	$36.12	$36.09	$38.26	$36.89	$36.53	$36.42	$36.72	$35.66	$35.94
FY 2012 - 2013													
	October	November	December	January	February	March	April	May	June	July	August	September	YTD Totals
Rounds played	3,018	2,701	2,244	1,888	2,550	3,207	2,986	3,685	3,335	3,481	3,654	2,915	35,664
Tournament Rounds	252	138	0	156	92	179	440	90	350	0	82	40	1,819
Range buckets	1,225	1,124	943	806	1180	1569	1345	1471	1206	1,262	1,355	1,008	14,494
Star Memberships	4,350.00	4,050.00	4,230.00	4,880.00	3,660.00	6,850.00	4,510.00	5,280.00	6,030.00	4,150.00	4,640.00	3,455.00	56,085
Green Fees	86,691.45	77,195.74	66,045.80	50,321.20	74,964.54	94,102.73	89,278.09	100,813.49	94,131.86	98,224.36	100,669.60	78,876.70	1,011,316
Tournament Fees	8,655.62	5,338.38	0.00	4,745.00	2,760.00	2,766.50	15,348.30	3,910.50	12,267.00	0.00	3,755.00	1,350.00	60,896
Range Fees	5,976.93	5,252.15	4,365.00	4,511.84	6,538.66	8,935.26	7,721.35	8,554.73	7,279.42	6,721.38	7,694.45	5,895.41	79,447
Sales of Merchandise	8,211.11	6,279.45	5,291.47	5,096.26	7,156.90	6,303.31	7,527.24	9,687.40	8,406.51	7,139.90	8,140.62	6,834.45	86,075
Concession Fees	4,346.28	3,229.36	2,428.81	2,219.61	2,973.60	3,707.31	4,715.23	4,243.94	4,231.43	3,478.68	3,953.92	3,033.14	42,561
Miscellaneous Income	8,632.04	7,495.90	5,620.06	5,243.28	4,711.82	7,607.33	7,745.64	10,292.53	8,570.49	10,133.72	10,472.34	6,591.64	93,117
Total Income	$126,863.43	$108,840.98	$87,981.14	$77,017.19	$102,765.52	$130,272.44	$136,845.85	$142,782.59	$140,916.71	$129,848.04	$139,325.93	$106,036.34	$1,429,496.16
Weather Totals	1 rain	2 rain/1 closed	6 rain/1 closed	11 rain	6 rain	1 rain	5 rain	3 rain/2 maint.	1 rain	8 rain	3 rain	4 rain	51/4
Income Per Round	$37.47	$36.91	$37.32	$35.29	$37.51	$36.45	$38.63	$36.42	$36.60	$36.11	$36.05	$34.71	$36.64
FY 2011 - 2012													
	October	November	December	January	February	March	April	May	June	July	August	September	YTD Totals
Rounds played	3,197	2,584	2,384	2,523	1,930	3,094	3,742	3,759	3,335	3,037	3,316	3,149	36,050
Tournament Rounds	252	220	0	71	119	58	456	311	301	115	21	109	2,033
Range buckets	1,348	1,116	979	1137	689	1472	1821	1605	1467	927	1,191	1,227	14,979
Star Memberships	3,450.00	2,850.00	3,420.00	4,720.00	3,215.00	5,015.00	6,740.00	5,690.00	4,950.00	3,890.00	4,847.00	3,675.00	52,462
Green Fees	86,961.06	75,789.86	66,383.52	70,031.71	49,635.21	86,204.47	109,812.57	101,462.44	96,117.30	84,902.59	89,724.88	87,838.57	1,004,864
Tournament Fees	6,976.00	8,911.01	0.00	2,125.00	3,870.00	2,446.00	16,031.00	12,603.07	10,326.00	4,672.24	882.00	3,847.00	72,689
Range Fees	6,802.86	5,318.24	4,844.98	5,507.43	3,280.61	7,335.68	9,617.08	7,870.86	7,048.26	5,095.15	5,629.80	6,001.17	74,352
Sales of Merchandise	7,610.47	6,144.44	8,357.47	5,799.85	5,647.97	8,602.16	13,579.42	15,595.32	11,351.62	9,054.05	8,974.84	7,509.52	108,227

GULAR SESSION CITY COUNCIL MEETING PACKET FOR THE MEETING TO BE HELD ON SEPTEMBER 20, 2021

Jersey Meadow Golf Course
Monthly Report

Concession Fees	3,829.49	2,640.15	2,549.98	2,739.64	1,954.47	3,838.73	5,659.13	5,245.18	4,728.65	3,673.72	3,812.72	4,014.84	44,687
Miscellaneous Income	7,053.00	6,609.23	8,529.79	7,177.18	8,492.85	9,448.03	10,858.82	11,964.72	14,350.84	8,464.58	10,883.66	10,891.51	114,724
Total Income	$122,682.88	$108,262.93	$94,085.74	$98,100.81	$76,096.11	$122,890.07	$172,298.02	$160,431.59	$148,872.67	$119,752.33	$124,754.90	$123,777.61	$1,472,005.66
Weather Totals	1 rain	4 rain/1 closed	7 rain/1 closed	6 rain	8 rain	8 rain	3 rain	2 rain/2 maint.	4 rain	10 rain	3 rain	6 rain	62/4
Income Per Round	$34.57	$37.59	$38.03	$36.00	$35.57	$37.40	$39.44	$38.02	$39.58	$36.76	$35.93	$36.86	$37.27

REGULAR SESSION CITY COUNCIL MEETING PACKET FOR THE MEETING TO BE HELD ON SEPTEMBER 20,

Jersey Meadow Golf Course
Monthly Report

FY 2010 - 2011													
	October	November	December	January	February	March	April	May	June	July	August	September	YTD Totals
Rounds played	3,643	2,534.00	2,366.00	2,179.00	2,297.00	3,312.00	3,522.00	3,690.00	3,179.00	3,526	3,029	3,338	36,615
Tournament Rounds	294	68	20	22	77	176	468	193	273	0	30	63	1,684
Range buckets	1,510	1,058	916	888	1274	1876	2048	1770	1257	1,472	1,083	1,135	16,287
Star Memberships	3075.00	2952.50	3835.00	2320.00	3520.00	3860.00	6380.00	6930.00	5710.00	4695.00	4460.00	3375.00	51,113
Green Fees	101,562.24	67,761.92	64,035.46	61,557.60	65,186.16	91,510.28	102,436.44	105,157.54	88,722.13	100,567.92	79,639.48	92,029.90	1,020,167
Tournament Fees	9,094.00	2,664.00	600.00	880.00	2,545.00	6,039.00	17,102.50	7,620.00	9,933.00	0.00	1,330.50	3,087.00	60,895
Range Fees	7,443.85	5,011.14	4,410.23	4,189.24	5,695.23	8,978.85	10,252.89	8,390.40	6,227.00	6,703.44	5,361.79	5,459.55	78,124
Sales of Merchandise	6,734.53	4,917.85	6,226.12	4,002.56	4,432.63	7,361.35	9,508.45	9,991.97	8,419.59	7,303.99	6,060.27	6,186.80	81,146
Concession Fees	3,581.73	1,901.35	1,982.47	1,769.18	1,796.90	3,822.67	4,904.61	4,531.72	3,851.24	3,425.06	2,734.75	3,382.25	37,684
Miscellaneous Income	7,687.65	5,445.04	6,054.75	3,064.49	3,199.22	6,996.28	8,449.28	10,103.68	13,433.44	8,449.96	7,207.17	8,411.14	88,502
Total Income	$139,179.00	$90,653.80	$87,144.03	$77,783.07	$86,375.14	$128,568.43	$159,034.17	$152,725.31	$136,296.40	$131,145.37	$106,793.96	$121,931.64	$1,417,630.32
Weather Totals	0 rain	5 rain/1 closed	6 rain/2 closed	16 rain	7 rain/freeze	3 rain/close	0 rain	1 rain	1 rain	5 rain	0 rain	4 rain	48/3
Income Per Round	$34.57	$33.71	$34.92	$34.29	$34.90	$35.75	$38.26	$37.55	$37.83	$35.86	$33.45	$34.86	$35.68
FY 2009 - 2010													
	October	November	December	January	February	March	April	May	June	July	August	September	YTD Totals
Rounds played	2,787	2,676	1,560	1,793	1,627	2,733	3,109	3,650	3,115	2,694	3,108	2,819	31,671
Tournament Rounds	176	56	18	50	39	210	630	318	191	106	224	140	2,158
Range buckets	774	1,042	403	577	732	1294	1704	1732	1117	743	1,176	1,028	12,322
Star Memberships	2700.00	2850.00	2325.00	2960.00	3035.00	4750.00	5025.00	5805.00	5885.00	3555.00	4535.00	2805.00	46,230
Green Fees	78,163.14	72,799.20	43,991.37	47,155.91	42,930.20	71,732.46	84,216.76	101,977.53	83,465.56	76,115.18	82,571.47	76,588.52	861,707
Tournament Fees	6,126.00	2,824.80	444.78	2,135.00	1,642.00	6,486.04	21,182.46	11,408.00	6,786.00	2,475.00	5,375.00	4,874.24	71,759
Range Fees	4,345.85	5,197.37	1,815.11	2,687.57	3,608.29	6,477.58	8,578.17	9,026.51	5,391.05	3,714.83	6,032.45	5,152.87	62,028
Sales of Merchandise	4,941.78	5,032.06	5,025.00	5,026.29	3,846.26	7,538.45	10,722.17	10,200.46	7,924.24	7,138.28	8,416.68	6,215.64	82,027
Concession Fees	2,803.45	2,170.75	1,164.27	1,396.99	1,314.78	2,360.74	3,573.23	3,373.94	2,942.60	2,415.79	2,542.38	2,559.23	28,618
Miscellaneous Income	4,127.54	5,618.95	4,115.81	4,023.44	3,989.91	7,178.92	8,167.90	10,002.32	14,955.42	7,893.33	9,647.04	7,796.88	87,517
Total Income	$103,207.76	$96,493.13	$58,881.34	$65,385.20	$60,366.44	$106,524.19	$141,465.69	$151,793.76	$127,349.87	$103,307.41	$119,120.02	$105,992.38	$1,239,887.19
Weather Totals	12 rain	4 rain/1 closed	16rain/1 closed	12 rain&freeze	9 rain	5 rain	5 rain	3 rain	6 rain	14 rain	3 rain	7 rain	96/2
Income Per Round	$33.92	$34.28	$35.84	$33.87	$34.41	$34.58	$36.49	$36.79	$36.74	$35.63	$34.39	$34.87	$35.29
FY 2008 - 2009													
	October	November	December	January	February	March	April	May	June	July	August	September	YTD Totals
Rounds played	3,073	2,824	2,263	2,903	2,765	3,064	3,454	4,292	3,705	3,492	3,553	2,971	38,359
Tournament Rounds	436	217	40	59	166	172	253	621	222	90	182	274	2,732
Range buckets	1,473	1,336	896	1501	1283	1482	1808	2449	1747	1,442	1,568	1,234	18,219
Star Memberships	3,675.00	2,175.00	2,850.00	3,300.00	3,375.00	2,625.00	4,725.00	5,600.00	4,875.00	4,275.00	3,900.00	3,375.00	44,750
Green Fees	85,378.23	81,782.92	63,107.88	85,114.72	75,556.66	83,037.88	98,381.09	118,199.30	101,442.89	92,519.10	97,926.16	79,959.42	1,062,406
Tournament Fees	16,915.15	8,620.00	1,734.00	1,618.25	5,782.56	5,966.00	7,105.22	24,132.78	9,199.52	3,574.37	3,384.00	11,096.02	99,128
Range Fees	7,543.82	6,492.82	4,726.70	7,260.72	6,467.39	7,234.18	9,423.98	12,183.42	8,925.09	7,124.29	8,068.39	6,298.10	91,749
Sales of Merchandise	7,680.45	5,845.06	5,749.02	6,175.08	7,378.24	7,647.01	8,649.23	9,469.04	9,003.92	7,768.97	8,691.51	6,723.18	90,781

GULAR SESSION CITY COUNCIL MEETING PACKET FOR THE MEETING TO BE HELD ON SEPTEMBER 20, 2021

Jersey Meadow Golf Course
Monthly Report

Concession Fees	3,646.01	2,257.19	1,771.73	2,303.93	2,331.45	2,416.99	3,417.68	4,094.73	3,271.77	3,054.93	2,968.04	2,587.46	34,122
Miscellaneous Income	9,671.94	7,325.63	7,825.08	7,667.00	9,325.27	6,641.10	7,269.75	10,287.23	14,040.61	12,834.43	10,524.28	7,107.67	110,520
Total Income	$134,510.60	$114,498.62	$87,764.41	$113,439.70	$110,216.57	$115,568.16	$138,971.95	$183,966.50	$150,758.80	$131,151.09	$135,462.38	$117,146.85	$1,533,455.63
Weather Totals	4 rain	3 rain/1 closed	5 rain/1 closed	3 rain	4 rain	9 rain	5 rain	0 rain	1 rain	4 rain	3 rain	7 rain	48/2
Income Per Round	$37.29	$36.94	$36.87	$37.18	$36.45	$34.90	$36.21	$36.31	$37.15	$35.42	$35.22	$35.06	$36.23

6/7/2021

GULAR SESSION CITY COUNCIL MEETING PACKET FOR THE MEETING TO BE HELD ON SEPTEMBER 20,

Jersey Meadow Golf Course
Monthly Report

FY 2007 - 2008													
	October	November	December	January	February	March	April	May	June	July	August	September	YTD Totals
Rounds played	3,192	2,480	2,736	2,093	2,660	3,294	3,571	3,931	3,740	3,937	3,454	2,602	37,690
Tournament Rounds	671	239	52	14	136	92	633	403	236	25	22		2,523
Range buckets	1,319	1,048	1046	670	1139	1692	2003	1847	1599	1,598	1,235	1,143	16,339
Star Memberships	1,125.00	1,550.00	1,725.00	2,325.00	3,450.00	7,350.00	3,300.00	5,100.00	6,125.00	7,275.00	4,725.00	3,200.00	47,250
Green Fees	85,660.56	66,972.27	79,060.69	60,368.18	75,060.02	96,735.43	98,765.00	112,642.50	104,126.56	105,197.39	97,231.84	74,327.25	1,056,148
Tournament Fees	20,010.12	8,577.00	1,944.01	626.00	4,597.00	3,000.95	19,915.27	14,606.25	8,681.00	808.25	1,249.00		84,015
Range Fees	6,998.33	5,620.11	5,594.84	3,316.53	5,701.59	8,831.93	10,254.45	10,181.57	8,019.81	7,948.89	6,211.84	5,264.15	83,944
Sales of Merchandise	6,323.97	6,795.17	7,157.44	4,211.03	5,220.90	8,454.32	8,533.52	10,289.47	9,891.12	8,167.06	8,573.44	4,885.10	88,503
Concession Fees	2,720.64	2,116.80	1,881.42	1,429.58	2,044.44	2,845.78	3,576.02	4,247.24	3,361.53	3,120.31	3,078.02	2,131.87	32,554
Miscellaneous Income	3,649.17	3,294.29	2,554.38	2,735.65	4,626.10	4,846.64	11,084.79	12,245.83	14,991.62	10,154.55	10,227.21	6,841.60	87,252
Total Income	$126,487.79	$94,925.64	$99,917.78	$75,011.97	$100,700.05	$132,065.05	$155,429.05	$169,312.86	$155,196.64	$142,671.45	$131,296.35	$96,649.97	$1,479,664.60
Weather Totals	4 rain	4 rain/1 closed	5 rain/1 closed	9 rain	5 rain	5 rain	1 rain	2 rain	8 rain	6 rain	10 rain	6 closed-Ike	65/2
Income Per Round	$32.45	$34.34	$35.22	$34.50	$34.78	$36.83	$36.19	$37.89	$37.49	$34.17	$36.41	$35.91	$35.62

FY 2006 - 2007													
	October	November	December	January	February	March	April	May	June	July	August	September	YTD Totals
Rounds played	2,568	2,743	2,148	1,634	2,112	2,933	3,492	3,239	2,647	2,625	2,954	2,977	32,072
Tournament Rounds	831	241			78	167	365	163	506	17	83	354	2,805
Range buckets	852	1,017	619	328	632	1329	1282	1032	828	573	963	1,334	10,789
Star Memberships	825.00	1,125.00	900.00	1,200.00	2,025.00	2,550.00	2,025.00	2,025.00	2,700.00	1,925.00	1,950.00	2,850.00	22,100
Green Fees	75,052.08	77,054.99	61,958.41	46,047.63	56,727.00	82,002.01	99,339.96	89,832.90	74,158.69	70,256.48	77,765.35	86,213.98	896,409
Tournament Fees	26,126.45	8,229.66			2,340.00	5,984.52	12,937.27	5,764.00	18,891.57	544.00	2,336.64	15,028.00	98,182
Range Fees	4,486.00	5,059.11	2,966.69	1,641.14	3,305.97	6,574.96	6,450.73	5,493.95	4,170.50	2,964.69	4,660.35	6,313.05	54,087
Sales of Merchandise	5,756.99	6,144.51	4,545.42	2,018.11	4,485.95	7,001.69	6,762.30	7,439.75	7,492.20	5,128.58	6,279.02	5,522.72	68,577
Concession Fees	2,753.47	1,831.77	849.49	837.97	1,471.62	2,361.81	3,116.86	2,325.47	2,603.71	1,741.09	2,161.42	2,346.82	24,402
Miscellaneous Income	2,861.56	2,584.60	3,755.19	2,290.00	2,423.00	3,468.25	5,474.79	5,195.82	5,667.66	9,645.66	4,445.60	4,146.88	51,959
Total Income	$117,861.55	$102,029.64	$74,975.20	$54,034.85	$72,778.54	$109,943.24	$136,106.91	$118,076.89	$115,684.33	$92,205.50	$99,598.38	$122,421.45	$1,215,716.48
Weather Totals				15 rain/cold	6 rain/cold	5 rain	3 rain	9 rain	12 rain	15 rain	4 rain	1 rain	
Income Per Round	$34.43	$33.82	$34.49	$32.33	$32.31	$34.64	$34.76	$34.11	$35.83	$34.17	$32.15	$35.90	$34.22

FY 2005 - 2006													
	October	November	December	January	February	March	April	May	June	July	August	September	YTD Totals
Rounds played	3,071	2,326	2,455	2,571	2,094	3,000	3,817	3,241	2,760	2,838	3,056	3,060	34,289
Tournament Rounds	342	372	122	14	123	275	216	303	254	214	107	273	2,615
Range Buckets	1,348	854	1,032	863	754	1,468	1,666	1,125	915	958	1,123	1,143	13,249
Star Memberships	825.00	750.00	525.00	1,950.00	975.00	1,500.00	1,598.00	945.00	1,785.00	2,250.00	750.00	1,095.00	14,948
Green Fees	83,308.78	64,013.19	68,822.00	67,352.18	54,583.70	78,298.53	106,519.47	83,888.84	74,680.30	78,797.17	77,376.73	81,821.30	919,462
Tournament Fees	11,166.20	11,292.59	4,058.00	623.00	5,168.84	8,581.15	7,073.12	8,324.82	6,950.00	5,527.00	3,878.00	10,384.78	83,028
Range Fees	6,370.11	4,580.34	5,192.32	4,300.89	3,572.44	6,376.90	7,462.75	5,430.79	4,506.92	4,860.93	5,547.94	5,670.09	63,872
Sales of Merchandise	6,352.08	4,710.74	5,973.00	5,587.32	4,895.17	5,634.42	7,388.88	6,373.86	6,177.10	5,357.32	6,436.83	6,133.67	71,020

GULAR SESSION CITY COUNCIL MEETING PACKET FOR THE MEETING TO BE HELD ON SEPTEMBER 20,

Jersey Meadow Golf Course
Monthly Report

Concession Fees	2,790.10	1,842.23	1,655.27	1,581.45	1,144.16	1,846.17	2,892.01	2,455.09	2,292.43	1,865.99	2,056.32	2,395.12	24,816
Miscellaneous Income	1,592.00	3,000.28	1,843.00	1,676.00	1,660.18	1,954.00	6,361.74	8,579.88	5,424.63	5,062.01	4,973.97	2,453.64	44,581
Total Income	$112,404.27	$90,189.37	$88,068.59	$83,070.84	$71,999.49	$104,191.17	$139,295.97	$115,998.28	$101,816.38	$103,720.42	$101,019.79	$109,953.60	$1,221,728.17
Weather Totals													
Income Per Round	$32.69	$33.15	$33.97	$31.38	$32.04	$31.36	$34.14	$32.46	$33.19	$33.25	$31.70	$32.66	$32.70

GULAR SESSION CITY COUNCIL MEETING PACKET FOR THE MEETING TO BE HELD ON SEPTEMBER 20,

Jersey Meadow Golf Course
Monthly Report

FY 2004 - 2005													
	October	November	December	January	February	March	April	May	June	July	August	September	YTD Totals
Rounds played	3,118	2,006	2,531	2,293	1,589	2,474	3,064	2,758	2,956	2,912	2,893	2,488	31,082
Tournament Rounds	277	106	70	3	36	150	277	408	263	57	60	110	1,817
Range buckets	0	665	1163	891	476	1101	1550	1293	1226	748	1,068	852	11,033
Star Memberships	480.00	0.00	675.00	2,181.00	675.00	2,100.00	2,850.00	1,950.00	1,725.00	1,500.00	1,425.00	1,050.00	16,611
Green Fees	74,189.66	51,783.51	62,571.20	59,311.24	41,562.60	66,557.58	85,036.07	71,311.04	74,745.97	77,384.45	71,587.00	62,165.00	798,205
Tournament Fees	12,244.20	4,070.00	2,690.00	350.00	1,362.23	4,532.00	8,260.76	13,663.66	9,030.60	2,289.01	2,365.00	4,048.00	64,905
Range Fees	360.00	2,817.98	3,872.64	3,668.49	2,028.03	4,701.63	6,928.84	6,292.07	6,066.74	3,544.83	4,894.00	4,313.66	49,489
Sales of Merchandise	4,790.63	2,674.76	6,274.93	4,686.93	3,987.02	5,930.59	8,513.16	6,768.94	6,379.57	8,554.90	6,392.00	4,394.00	69,347
Concession Fees	2,886.22	3,589.83			916.00	1,535.00	2,196.04	2,163.80	2,638.75	2,088.86	2,074.00	1,650.00	21,739
Miscellaneous Income	180.00	60.00	1,401.00	930.00	727.00	1,408.00	2,183.09	2,724.00	6,716.64	3,941.67	4,276.00	12,914.17	37,462
Total Income	$95,130.71	$64,996.08	$77,484.77	$71,127.66	$51,257.88	$86,764.80	$115,967.96	$104,873.51	$107,303.27	$99,303.72	$93,013.00	$90,534.83	$1,057,758.19
Weather Totals						10 R; 20 S	2R; 28 S	3R; 28S	30S; No R	12R; 19 S	7R; 25 S	4R; 26S	
Income Per Round	$27.88	$30.77	$29.53	$30.03	$31.13	$32.27	$33.86	$32.51	$32.80	$32.94	$31.02	$34.44	$31.65

FY 2003 - 2004													
	October	November	December	January	February	March	April	May	June	July	August	September	Totals
Rounds played	2,838	2,605	2,735	2,186	1,829	2,824	3,261	3,203	1,952	0	0	3,841	27,274
Tournament Rounds	582	317	12	29	240	140	370	153	82	32	0	537	1,912
Range buckets	1,247	1124	1015	614	512	903	1746	1431	576	0	0	0	9,168
Star Memberships	880.00	485.00	617.00	2,840.00	1,620.00	2,485.00	2,810.00	1,670.00	50.00	0.00	0.00	1,220.00	$14,677.00
Green Fees	70,103.87	65,595.91	64,691.42	52,796.04	43,975.88	66,495.18	81,103.98	82,362.52	25,167.00	0.00	0.00	77,631.05	629,922.85
Tournament Fees	18,430.40	10,762.40	464.40	1,015.00	2,747.00	3,595.00	3,718.50	5,235.00	2,912.21	2,956.16	0.00	11,150.00	62,986.07
Range Fees	4,026.35	3,865.34	3,230.29	2,270.18	1,911.88	3,048.27	6,152.89	5,249.27	1,827.36	0.00	0.00	175.00	31,756.83
Sales of Merchandise	5,129.89	4,224.64	7,198.84	4,165.57	4,035.75	5,954.69	7,510.77	5,908.66	4,261.91	424.55	0.00	6,037.47	54,852.74
Concession Fees	2,013.15	3,492.29	2,560.00	1,977.00	1,731.20	1,740.36	2,485.45	2,965.09	3,108.38	0.00	0.00	81.92	22,154.84
Miscellaneous Income	2,240.00	1,920.00	1,323.00	1,275.00	1,640.00	840.82	499.00	953.00	3,285.75	250.00	0.00	192.00	14,418.57
Total Income	$102,823.66	$90,345.58	$80,084.95	$66,338.79	$57,661.71	$84,159.32	$104,280.59	$104,343.54	$40,612.61	$3,630.71	$0.00	$96,487.44	$830,768.90
Income Per Round	$29.81	$30.75	$28.93	$28.67	$27.09	$27.56	$27.95	$30.59	$19.94	$0.00	$0.00	$21.76	$27.96

FY 2002 - 2003													
	October	November	December	January	February	March	April	May	June	July	August	September	Totals
Rounds played	2,637	3,056	2,275	2,460	1,777	3,199	3,900	4,354	3,915	3,647	3,280	2,557	37,057
Tournament Rounds	0	159	0	0	188	138	66	287	62	59	17	248	1,224
Range buckets	843	1084	861	752	415	1256	2003	1941	1532	1,500	1,529	1,232	14,948
Star Memberships	400.00	300.00	1,115.00	7,465.00	3,578.00	4,420.00	5,205.00	3,990.00	2,610.00	1,895.00	1,790.00	805.00	$33,573.00
Green Fees	59,060.50	83,865.33	59,280.09	57,262.20	41,843.58	76,659.46	100,788.23	107,607.15	95,050.74	82,944.99	78,205.60	59,952.70	902,520.57
Tournament Fees	10,519.97	5,164.20	0.00	0.00	2,598.97	4,602.65	1,840.00	10,473.00	1,550.00	2,130.00	595.00	8,425.00	47,898.79
Range Fees	2,136.97	3,105.58	2,242.99	2,007.38	990.85	3,100.81	5,061.68	4,843.09	3,583.54	3,625.44	5,109.22	3,918.18	39,725.73
Sales of Merchandise	4,852.77	5,794.15	4,434.45	2,578.44	2,578.83	5,989.11	6,515.03	7,535.29	5,503.11	5,638.05	5,540.26	3,653.07	60,612.56
Concession Fees	3,692.00	3,146.00	2,056.00	2,079.00	1,494.00	2,970.00	2,969.95	3,999.34	5,224.34	3,331.06	3,097.78	2,473.09	36,532.56
Miscellaneous Income	1,650.00	1,860.00	2,265.00	1,419.00	1,695.00	2,130.00	2,550.00	2,805.00	6,380.00	6,588.00	2,295.00	2,160.00	33,797.00

REGULAR SESSION CITY COUNCIL MEETING PACKET FOR THE MEETING TO BE HELD ON SEPTEMBER 20, 2021

Jersey Meadow Golf Course
Monthly Report

Total Income	$82,312.21	$103,235.26	$71,393.53	$72,811.02	$54,779.23	$99,872.03	$124,929.89	$141,252.87	$119,901.73	$106,152.54	$96,632.86	$81,387.04	$1,154,660.21
Income Per Round	$31.06	$32.02	$30.89	$26.56	$26.06	$28.60	$30.19	$29.58	$29.49	$28.13	$28.77	$28.73	$29.29

REGULAR SESSION CITY COUNCIL MEETING PACKET FOR THE MEETING TO BE HELD ON SEPTEMBER 20,

Jersey Meadow Golf Course
Monthly Report

FY 2001 - 2002													
	October	November	December	January	February	March	April	May	June	July	August	September	Totals
Rounds played	3,203	3,061	2,774	2,800	2,969	3,734	4,385	4,735	4,182	4,139	3,580	3,592	43,154
Tournament Rounds													
Range buckets	1,388	1,374	844	1,261	1,316	1,897	2,131	2,143	1,818	1,813	1,506	1,476	18,967
Star Memberships				3,075.00	1,650.00	2,275.00	1,725.00	1,125.00	725.00	550.00	775.00	950.00	$12,850.00
Green Fees/Cart Fees	72,224.98	77,087.14	65,224.37	68,447.62	70,028.61	91,055.04	111,535.50	119,348.59	104,195.50	104,907.23	89,569.50	79,854.95	1,053,479.03
Tournament Fees	17,967.54	10,416.85	1,552.00	0.00	3,741.00	2,498.00	12,004.42	6,740.00	2,220.70	0.00	1,919.00	17,433.92	76,493.43
Range Fees	3,924.83	3,699.12	2,181.79	3,236.49	3,508.36	4,850.70	5,791.90	5,805.72	4,675.54	4,822.48	4,043.98	3,696.75	50,237.66
Sales of Merchandise	7,501.72	7,470.10	8,574.76	4,093.24	4,597.56	8,690.81	7,429.96	7,877.93	8,103.63	5,589.34	5,526.70	4,663.97	80,119.72
Concession Fees	4,471.00	3,728.00	2,457.00	850.00	4,046.00	3,656.00	4,778.00	4,932.00	4,636.00	4,331.00	3,382.00	2,992.00	44,259.00
Miscellaneous Income					3,348.03	10.00		2,115.00	5,080.00	1,880.00	1,860.00	3,030.00	17,323.03
Total Income	$106,090.07	$102,401.21	$79,989.92	$75,777.35	$90,919.56	$113,035.55	$143,264.78	$147,944.24	$129,636.37	$122,080.05	$107,076.18	$112,621.59	$1,334,761.87
Income Per Round	$33.12	$33.45	$28.84	$27.37	$30.07	$29.66	$32.28	$31.01	$30.83	$29.36	$29.69	$31.09	$30.63

FY 2000 - 2001													
	October	November	December	January	February	March	April	May	June	July	August	September	Totals
Rounds played	3,632	2,387	2,224	1,526	2,087	2,196	3,929	3,482	3,097	3,564	3,433	3,480	35,037
Tournament Rounds													
Range buckets				567	755	1,194	1,757	1,498	1,293	1,252	1,229	1,218	10,763
Green Fees/Cart Fees	100,532.00	59,091.00	57,691.00	42,849.85	53,215.20	55,637.91	108,176.93	93,704.77	79,608.10	86,599.86	76,676.57	82,458.86	$896,242.05
Tournament Fees	19,585.00	7,087.00	6,235.00	0.00	0.00	4,107.87	9,607.00	14,018.50	332.64	792.00	2,186.00	4,023.02	67,974.03
Range Fees	6,702.00	3,778.00	3,198.00	2,365.14	3,229.47	5,533.59	7,552.85	6,458.97	5,754.22	5,431.94	4,280.78	3,776.78	58,061.74
Sales of Merchandise	19,858.00	4,548.00	5,884.00	3,055.92	2,960.74	8,316.70	9,143.74	7,896.28	7,636.53	6,951.08	8,554.69	6,491.01	91,296.69
Concession Fees	285.00	808.00	417.00	1,726.00	2,278.00	2,982.00	4,942.00	3,701.00	3,099.00	3,441.00	3,256.00	3,505.00	30,440.00
Miscellaneous Income	-571.00	3,254.00	2,407.00										
Total Income	$146,391.00	$78,566.00	$75,832.00	$49,996.91	$61,683.41	$76,578.07	$139,422.52	$125,779.52	$96,430.49	$103,215.88	$94,954.04	$100,254.67	$1,144,014.51
Income Per Round	$40.31	$32.91	$34.10	$32.76	$29.56	$34.87	$35.49	$36.12	$31.14	$28.96	$27.66	$28.81	$32.65

Notes:
1. October, November, December 2000 Golf Course under private management contract. City took over management January 1, 2001.
2. Green Fees and Cart Fees combined into one fee beginning January 2002.
3. Food and drinks contracted out to private vendor as of January 2001.
4. Star Membership program began in January 2002.
5. FY 2000 -2001 - records in Smith Systems Software, no printouts available and the software is offline.
6. Concession Fees shown in time period of purchase, not when received.
7. Income/Round: Income does not include Star Memberships; Rounds includes Rounds Played and Tournament Rounds.
8. Miscellaneous Income includes: Cart fee, Handicap Service, Leagues, expired Gift Certificates, Miscellaneous merchandise and Junior Camp.
9. As of April, 2016, Leagues are accounted for in Rounds played and in Green Fees.
10. FY 2016-2017 - Line Item added: Club Rental.
11. Abbreviations: W-weather RO-rain out CM-course maintenance TT-temporary tees H-holiday CV-COVID-19
12. FY 2016-2017 - Miscellaneous Income changed to Miscellaneous Fees per Finance.

7/2021
GULAR SESSION CITY COUNCIL MEETING PACKET FOR THE MEETING TO BE HELD ON SEPTEMBER 20,

Golf Course Monthly Financial Statements

Jersey Village, TX

Group Summary

For Fiscal: 2020-2021 Period Ending: 08/31/2021

Categor...	Original Total Budget	Current Total Budget	Period Activity	Fiscal Activity	Variance Favorable (Unfavorable)	Percent Used
Fund: 11 - GOLF COURSE FUND						
Department: 80 - 80						
85 - FEE & CHARGES FOR SERVICE	1,609,800.00	1,609,800.00	127,842.18	1,691,353.08	81,553.08	105.07 %
96 - INTEREST EARNED	1,000.00	1,000.00	4.93	61.28	-938.72	6.13 %
97 - INTERFUND ACTIVITY	345,891.14	345,891.14	0.00	0.00	-345,891.14	0.00 %
98 - MISCELLANEOUS REVENUE	25,000.00	25,000.00	0.00	25,760.25	760.25	103.04 %
Department: 80 - 80 Total:	**1,981,691.14**	**1,981,691.14**	**127,847.11**	**1,717,174.61**	**-264,516.53**	**86.65 %**
Department: 81 - CLUB HOUSE						
30 - SALARIES, WAGES, & BENEFITS	496,304.88	496,304.88	41,191.67	454,723.75	41,581.13	91.62 %
34 - COST OF SALES	155,000.00	155,000.00	24,108.25	182,225.63	-27,225.63	117.56 %
35 - SUPPLIES	17,150.00	17,150.00	129.39	10,343.95	6,806.05	60.31 %
45 - MAINTENANCE	4,450.00	4,450.00	0.00	3,179.64	1,270.36	71.45 %
50 - SERVICES	41,600.00	41,600.00	679.50	30,391.32	11,208.68	73.06 %
54 - SUNDRY	51,400.00	51,400.00	5,037.46	77,566.60	-26,166.60	150.91 %
55 - PROFESSIONAL SERVICES	3,500.00	3,500.00	555.00	555.00	2,945.00	15.86 %
60 - OTHER SERVICES	20,000.00	20,000.00	0.00	19,337.38	662.62	96.69 %
97 - INTERFUND ACTIVITY	71,025.00	71,025.00	71,025.00	71,025.00	0.00	100.00 %
Department: 81 - CLUB HOUSE Total:	**860,429.88**	**860,429.88**	**142,726.27**	**849,348.27**	**11,081.61**	**98.71 %**
Department: 82 - COURSE MAINTENANCE						
30 - SALARIES, WAGES, & BENEFITS	574,067.31	567,667.31	40,018.49	450,285.63	117,381.68	79.32 %
35 - SUPPLIES	98,700.00	98,700.00	1,573.90	108,926.92	-10,226.92	110.36 %
40 - MAINTENANCE--BLDGS, STRUC	5,000.00	5,000.00	0.00	0.00	5,000.00	0.00 %
45 - MAINTENANCE	19,000.00	19,000.00	47.69	15,684.77	3,315.23	82.55 %
50 - SERVICES	8,000.00	8,000.00	0.00	3,752.15	4,247.85	46.90 %
54 - SUNDRY	90,500.00	90,500.00	0.00	23,194.15	67,305.85	25.63 %
55 - PROFESSIONAL SERVICES	4,000.00	10,400.00	1,524.25	2,489.24	7,910.76	23.94 %
97 - INTERFUND ACTIVITY	93,954.00	93,954.00	93,954.00	93,954.00	0.00	100.00 %
Department: 82 - COURSE MAINTENANCE Total:	**893,221.31**	**893,221.31**	**137,118.33**	**698,286.86**	**194,934.45**	**78.18 %**
Department: 83 - BUILDING MAINTENANCE						
35 - SUPPLIES	4,800.00	4,800.00	585.10	7,269.43	-2,469.43	151.45 %
40 - MAINTENANCE--BLDGS, STRUC	16,000.00	16,000.00	4,340.00	18,938.44	-2,938.44	118.37 %
45 - MAINTENANCE	3,000.00	3,000.00	0.00	357.98	2,642.02	11.93 %
50 - SERVICES	26,000.00	26,000.00	1,889.94	19,677.10	6,322.90	75.68 %
55 - PROFESSIONAL SERVICES	800.00	800.00	0.00	649.69	150.31	81.21 %
Department: 83 - BUILDING MAINTENANCE Total:	**50,600.00**	**50,600.00**	**6,815.04**	**46,892.64**	**3,707.36**	**92.67 %**
Department: 87 - GC CAPITAL IMPROVEMENT						
70 - CAPITAL IMPROVEMENTS	26,000.00	131,000.00	0.00	46,930.79	84,069.21	35.83 %
Department: 87 - GC CAPITAL IMPROVEMENT Total:	**26,000.00**	**131,000.00**	**0.00**	**46,930.79**	**84,069.21**	**35.83 %**
Department: 88 - EQUIPMENT MAINTENANCE						
30 - SALARIES, WAGES, & BENEFITS	87,169.95	87,169.95	5,526.50	58,303.47	28,866.48	66.88 %
35 - SUPPLIES	30,450.00	30,450.00	2,087.59	22,485.60	7,964.40	73.84 %
45 - MAINTENANCE	6,000.00	6,000.00	0.00	2,410.39	3,589.61	40.17 %
50 - SERVICES	500.00	500.00	0.00	418.00	82.00	83.60 %
97 - INTERFUND ACTIVITY	27,320.00	27,320.00	27,320.00	27,320.00	0.00	100.00 %
Department: 88 - EQUIPMENT MAINTENANCE Total:	**151,439.95**	**151,439.95**	**34,934.09**	**110,937.46**	**40,502.49**	**73.26 %**
Fund: 11 - GOLF COURSE FUND Surplus (Deficit):	**0.00**	**-105,000.00**	**-193,746.62**	**-35,221.41**	**69,778.59**	**33.54 %**
Report Surplus (Deficit):	**0.00**	**-105,000.00**	**-193,746.62**	**-35,221.41**	**69,778.59**	**33.54 %**

REGULAR SESSION CITY COUNCIL MEETING PACKET FOR THE MEETING TO BE HELD ON SEPTEMBER 20, 2021

Fund Summary

Fund	Original Total Budget	Current Total Budget	Period Activity	Fiscal Activity	Variance Favorable (Unfavorable)
11 - GOLF COURSE FUND	0.00	-105,000.00	-193,746.62	-35,221.41	69,778.59
Report Surplus (Deficit):	**0.00**	**-105,000.00**	**-193,746.62**	**-35,221.41**	**69,778.59**

REGULAR SESSION CITY COUNCIL MEETING PACKET FOR THE MEETING TO BE HELD ON SEPTEMBER 20, 2021

Golf Course Fund
For the period ended August 31, 2021

		Adopted Budget	Current Budget	YTD Actual	% of Actual compared to Budget	Projections
Revenue						
	Fees & Charge for Services	1,609,800.00	1,609,800.00	1,691,353.08	105.07%	1,820,000.00
	Interest Earned	1,000.00	1,000.00	61.28	6.13%	70.00
	Interfund Activity	345,891.14	345,891.14	-	0.00%	210,821.14
	Miscellaneous Revenue	25,000.00	25,000.00	25,760.25	100.00%	25,800.00
	Other Agency Revenue	-	-	-	0.00%	-
	Total Revenue	1,981,691.14	1,981,691.14	1,717,174.61	86.65%	2,056,691.14
Expenditures						
	Club House	860,429.88	860,429.88	849,348.27	98.71%	910,429.88
	Course Maintenance	893,221.31	893,221.31	698,286.86	78.18%	893,221.31
	Building Maintenance	50,600.00	50,600.00	46,892.64	92.67%	50,600.00
	Capital Improvement	26,000.00	51,000.00	46,930.79	0.00%	51,000.00
	Equipment Maintenance	151,439.95	151,439.95	110,937.46	73.26%	151,439.95
	Total Expenditures	1,981,691.14	2,006,691.14	1,752,396.02	87.33%	2,056,691.14

REGULAR SESSION CITY COUNCIL MEETING PACKET FOR THE MEETING TO BE HELD ON SEPTEMBER 20,

Jersey Village Parks & Recreation

To: Mayor Warren and City Council

CC: Austin Bleess, City Manager

From: Robert Basford, Parks and Recreation Director

Date: September 13, 2021

Subject: Parks & Recreation August 2021 Monthly Update

Jersey Meadow Golf Club

Financial Report (Monthly and Year to Date)

The month of August brought some momentum as customers have started to see some improvements and progress towards the berms conclusion. We operated with a discount for the month of august as we closed a hole or two for irrigation and berm construction. For the month of July, the course received $81,404.77 in green fees, and $8,223.60 in tournament fees. The course hosted 2836 rounds and 291 rounds of tournament play for a total of 3127 rounds. Merchandise Sales totaled $18,934.56. July presented a total golf course monthly revenue of $128,759.61.

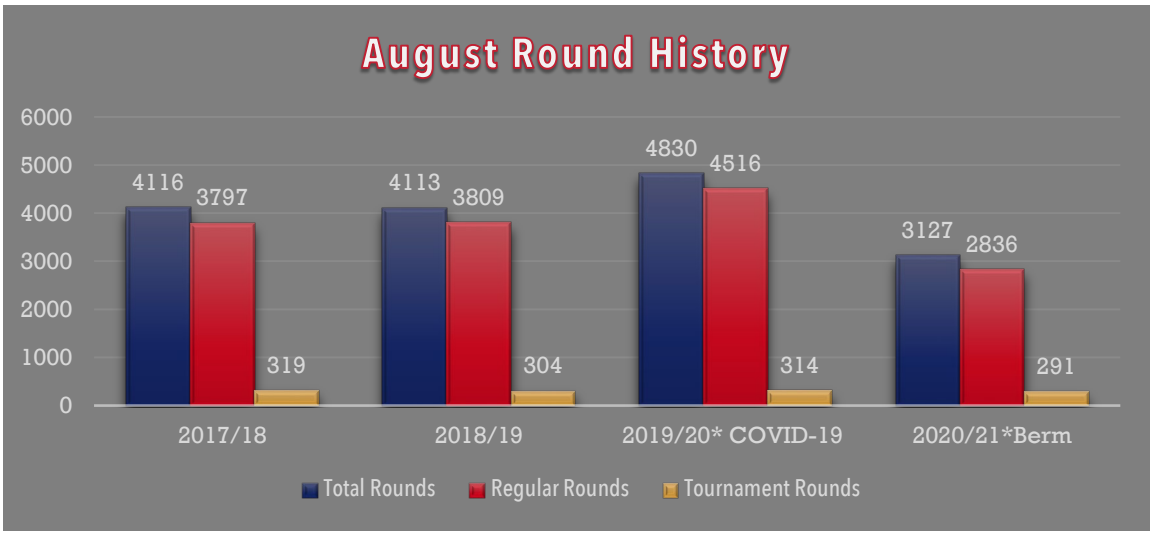

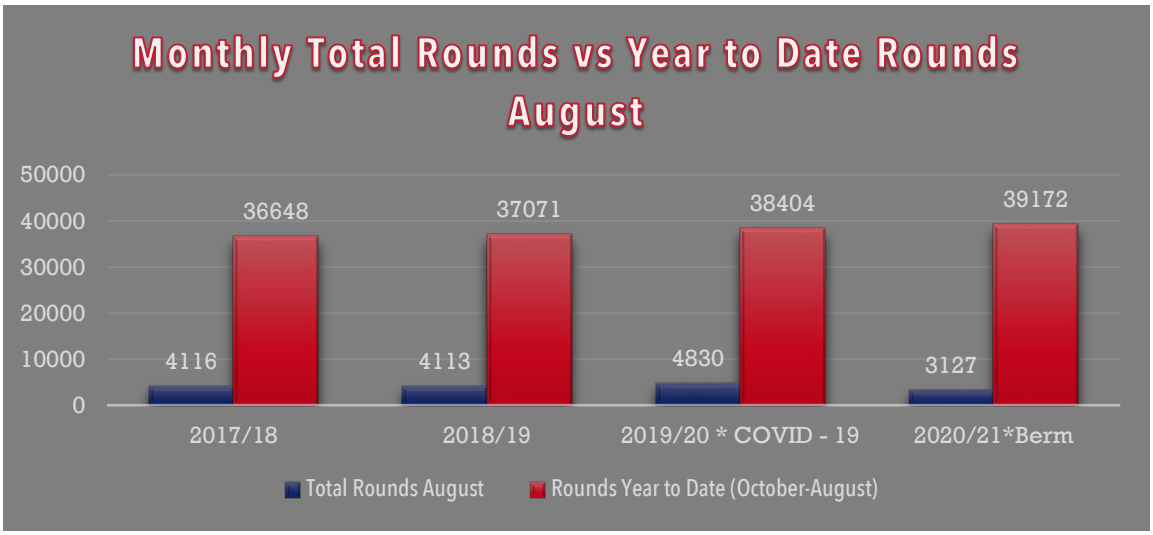

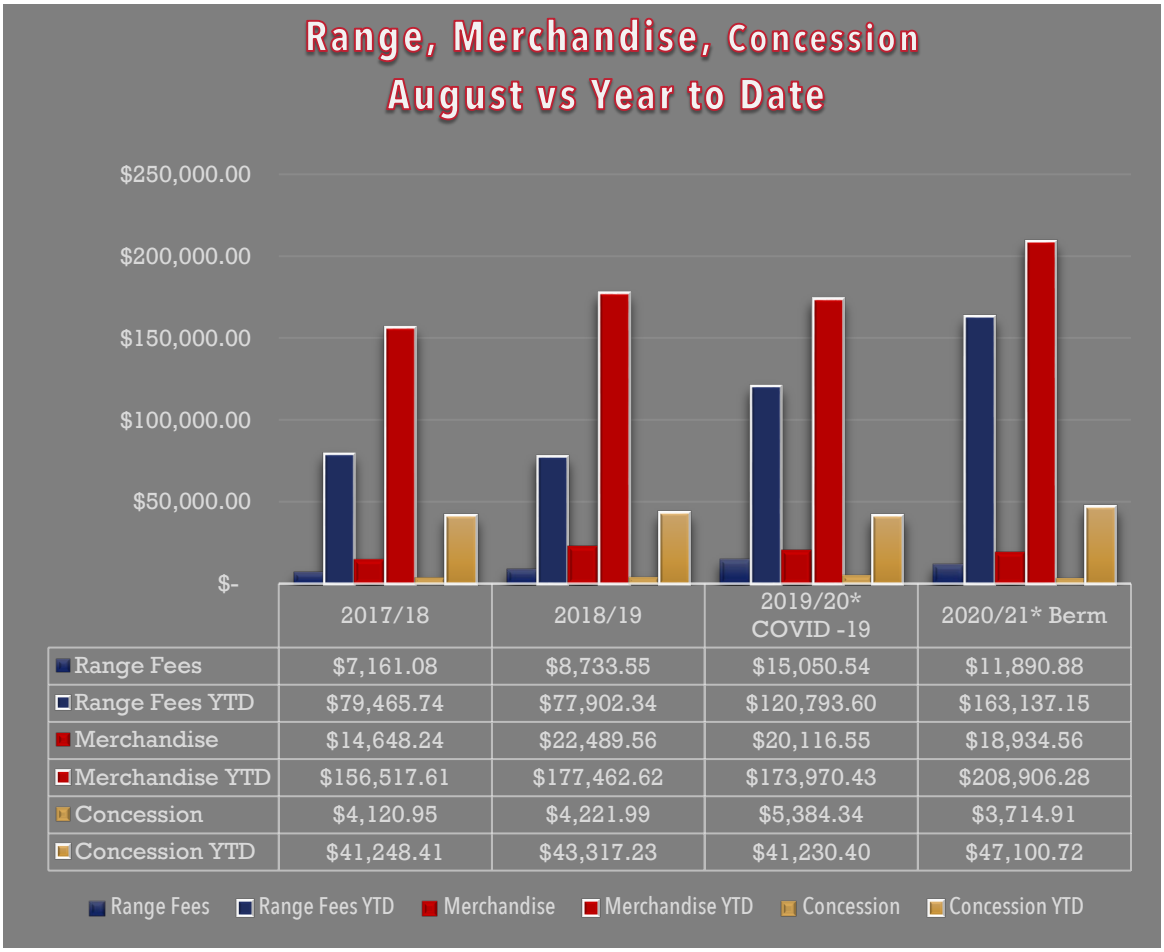

	2017/18	2018/19	2019/20* COVID -19	2020/21* Berm
Range Fees	$7,161.08	$8,733.55	$15,050.54	$11,890.88
Range Fees YTD	$79,465.74	$77,902.34	$120,793.60	$163,137.15
Merchandise	$14,648.24	$22,489.56	$20,116.55	$18,934.56
Merchandise YTD	$156,517.61	$177,462.62	$173,970.43	$208,906.28
Concession	$4,120.95	$4,221.99	$5,384.34	$3,714.91
Concession YTD	$41,248.41	$43,317.23	$41,230.40	$47,100.72

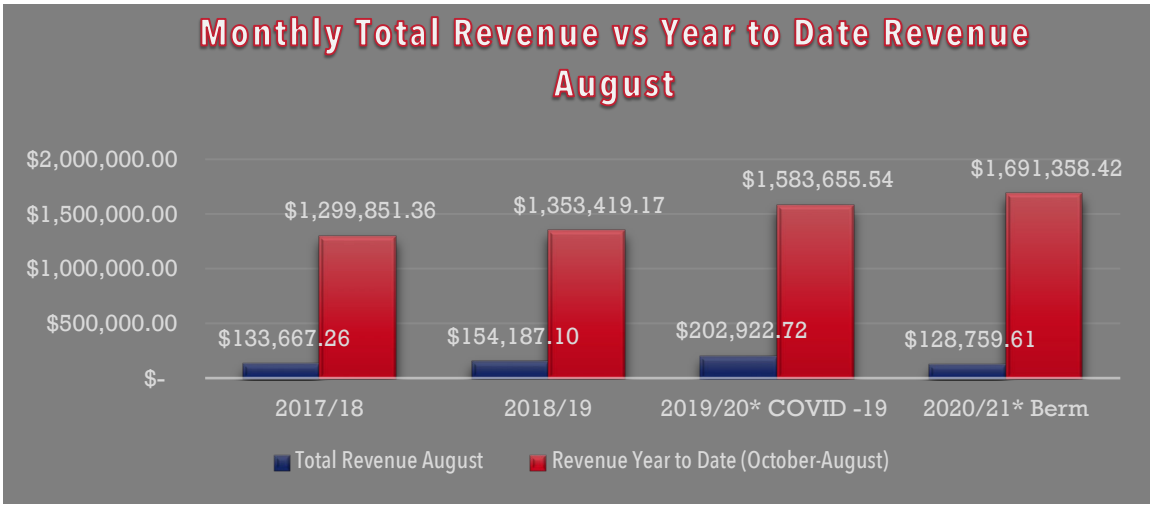

Clubhouse Maintenance Report

Berm Update

Our berm project has progressed towards the finishing phases. The berm has been formed completely. The contractor will shape the berm and form the frame for concrete during the month of September. The pipes under hoel 5 have been installed and the fairway has been shaped for sod. The brand new set of tee boxes on hole four have been shaped and prepared for sod. The new blue tee box sits roughly 16 feet above ground level! Hole 4 will be a signature hole moving forward thanks to this improvement. Drainage improvements have been implemented and the course is draining much better.

Parks

The Parks division worked on the installation of the new play structure at Clark Henry Park as well as the water line for the revegetation project. They have also began to prepare for a minor renovation/upgrade to the sand volleyball court for increased drainage. During August, staff has been focused on mowing when possible and limb/debris pickup due to heavy rain and potential hurricane preparation. We have continued to ensure routine duties have been met, playgrounds and parks are disinfected and park amenities are kept at a high standard.

Recreation

Recreation turned their focus to the fall season as we have some big events coming! The play guide was created and mailed out packed full of excellent opportunities. They have been focused on our upcoming concert: The Spazzmatics on October 2nd. They wrapped up the pool season with doggy dip day and winterized the pool. Preparation for final projects and future events have consumed a majority of the month for the recreation team.

Facilities

The facilities department has continued with the installation of the new cloud based lock system. They experienced a few delays in this installation but are still set up for completion. In addition to project management; routine janitorial duties, budget preparation, work orders and preventative maintenance has been completed.

Open Date	Type	Address	Description
8/30/2021 15:23	Code Issue	15417 Chichester Ln Jersey Village 77040	Miss Royce called she is at 713-725-1452 about this property at 15417 Chichester she said it is extremely overgrown more than a foot tall I told her that would be a violation and we will follow up on it as soon as Yolanda gets here thank you
8/30/2021 14:20	Code Issue	15417 Chichester Ln Jersey Village 77040	Lot maintenance required.
8/24/2021 17:51	Code Issue	7906 Argentina St Jersey Village 77040-1301	Large ugly political signage in front of home.
8/20/2021 17:57	Code Issue	15702 Australia St Jersey Village 77040	Junk on yard. Resident states itâ€™s been there 7 weeks now.
8/20/2021 11:34	Code Issue	15606 Lakeview Dr Jersey Village 77040	Trailer in driveway.
8/18/2021 19:20	Code Issue	8313 Rio Grande St Jersey Village 77040	Lot maintenance required.
8/17/2021 23:11	Code Issue	16205 Lakeview Dr Jersey Village 77040-2027	RV parked in driveway for almost a month now
8/13/2021 18:48	Code Issue	8131 Jones Rd Jersey Village 77065	Prohibited bandit signs on display at mobile food court.
8/12/2021 13:41	Code Issue	15406 Lakeview Dr Jersey Village 77040	Lot maintenance required.
8/10/2021 15:08	Code Issue	16218 Tahoe Dr Jersey Village 77040	Utility trailer has been here at least since 7 am this morning. Isnâ€™t there a 2 hour time limit? This has happened on several occasions. There isnâ€™t any work being performed.
8/4/2021 22:56	Code Issue	15913 Juneau Lane Jersey Village 77040	Garage structure has collapsed

GULAR SESSION CITY COUNCIL MEETING PACKET FOR THE MEETING TO BE HELD ON SEPTEMBER 20,

MINUTES OF THE REGULAR MEETING OF THE CITY COUNCIL OF THE CITY OF JERSEY VILLAGE, TEXAS, HELD ON AUGUST 16, 2021 AT 7:00 P.M. IN THE CIVIC CENTER, 16327 LAKEVIEW, JERSEY VILLAGE, TEXAS.

A. CALL TO ORDER AND ANNOUNCE A QUORUM IS PRESENT

The meeting was called to order by Mayor Warren at 7:00 p.m. with the following present:

Mayor, Bobby Warren
Council Member, Drew Wasson
Council Member, Sheri Sheppard
Council Member, Michelle Mitcham
Council Member, James Singleton
Council Member, Gary Wubbenhorst

City Manager, Austin Bleess
City Secretary, Lorri Coody
City Attorney, Justin Pruitt

Staff in attendance: Mark Bitz, Fire Chief; Isabel Kato, Finance Director; Kirk Riggs, Chief of Police; Robert Basford, Director of Parks and Recreation; Bob Blevins, IT Director; and Harry Ward, Director of Public Works.

B. INVOCATION AND PLEDGE OF ALLEGIANCE

1. **Prayer and Pledge by:** Sheri Sheppard, Council Member Place 2

C. CITIZENS' COMMENTS

Citizens who have signed a card and wish to speak to the City Council will be heard at this time. In compliance with the Texas Open Meetings Act, unless the subject matter of the comment is on the agenda, the City staff and City Council Members are prevented from discussing the subject and may respond only with statements of factual information or existing policy. Citizens are limited to five (5) minutes for their comments to the City Council.

Mark Maloy, 7803 Hamilton Circle, Jersey Village, Texas (713) 461-1430 – Mr. Maloy spoke to City Council about the proposed 2021-2022 Municipal Budget. He was concerned about the increases in tax monies needed to support this budget. He does not believe that the residents should have to pay these increases. He is concerned that the taxes are increased every year to cover increases in expenses for the City. He gave detailed information about the proposed budget to support his concerns.

Eric Henac, 15601 Singapore Lane, Jersey Village, Texas (832) 567-0974 – Mr. Henac spoke to City Council about the length of the Council Packet. He felt it is too long. He went on to speak to the Golf Course updates. He wanted to know if the club could be updated minimally without having to wait for two years for updates. He also mentioned the wide format printer, hoping he would be able to use the printer for his personal use. He also spoke to construction being done around the City. He wanted to know where he can find information about the status of projects. He closed by thanking the Police Department about assisting with a suspicious vehicle and he thanked Council Member Wasson for his email communication and Mayor Warren for his monthly newsletter.

Nancy Yetter, 16121 Capri, Jersey Village, Texas (713) 419-3609 – Ms. Yetter spoke to City Council about the map that was recently published depicting the drainage project for Wall Street. She told City Council that she lives on Capri near the Church. In reviewing the map, she noticed

DRAFT

that the improvements stop before reaching her home on Capri. Through inquires with City Staff, she learned that the improvements stop because the last half of the block drains to the east. Nevertheless, she does not agree with that finding. She does not believe that the water flows east. She was able to speak to the Engineer in charge of the project to get a better understanding, but she is still having trouble understanding the finding for the flow of water. She hopes that their findings are correct and that flooding will no longer be an issue for her home.

Bob Kubala, 16001 Lakeview Drive, Jersey Village, Texas (432) 553-3247 – Mr. Kubala spoke to City Council about "trust." He feels it is missing in this City. He stated that some voters want elected officials to make decisions on their behalf for the City while other voters want elected officials to make decisions based upon what the voter feels is best. With this dilemma, he would like for the Mayor to provide information in his next Newsletter outlining the best path for elected officials to follow in order to accomplish City goals. In closing he hopes that the City can reboot in order to improve "trust." In response to his question, Mayor Warren told Mr. Kubala that he believes that Edwin Burke's November 3, 1774 speech to the electors of Bristol holds the key for guiding elected officials' decision making.

Jennifer McCrea, 15417 Lakeview Drive, Jersey Village, Texas (832) 444-9448 – Ms. McCrea spoke to City Council about the Citizens of the Month Award. The winner for the month of August is Sharon Webb. She is a long time member of Jersey Village. Ms. McCrea told of how Ms. Webb helped feed her family for six (6) weeks during a trying and difficult time. She went on to explain other selfless acts that Ms. Webb has performed for many residents in Jersey Village. She closed by encouraging all to get vaccinated for COVID.

D. FISCAL 2021-2022 MUNICIPAL BUDGET AND TAX RATE ITEMS

1. Discuss and take appropriate action concerning any final changes to the proposed 2021-2022 Municipal Budget.

Isabel Kato, Finance Director, introduced the item. Background information is as follows:

Section 102-007 of the Local Government Code provides that upon closing the public hearing on the proposed municipal budget, the governing body of the municipality shall take action on the proposed budget. In doing so, the governing body may make any changes to the budget that it considers warranted by the law that is in the best interest of the municipal taxpayers.

City Council held the public hearing on the 2021-2022 Municipal Budget on July 19, 2021 and postponed adopting the budget until August 16, 2021. This item provides opportunity for the Council to discuss and provide for any needed changes to the 2020-2021 municipal budget before moving on to the item for budget adoption.

The changes proposed are as follows:

- 01-10-7201 Current Property Taxes from $9,958,847.49 to $6,756,278;
- 03-50-7201 Current Property Taxes from $1,463,006.80 to $1,454,925.74;

DRAFT

REGULAR SESSION CITY COUNCIL MEETING PACKET FOR THE MEETING TO BE HELD ON SEPTEMBER 20, 2021

- 01-23-3007 Communication Overtime from $50,000 to $77,000;
- 01-32-4503 Radio Radar Equipment from $0 to $800 (Radio Radar for Fleet Dept.);
- 10-90-9910 American Rescue Plan from $977,515 to $502,515 (Allocate part to Fund 07);
- 07-71-9910 American Rescue Plan from $0 to $475,000 (Allocate from Fund 10);
- 01-10-9755 Increase transfer from Fire Control & Prevention from $799,879 to $1,149,879;
- 01-10-9750 Increase transfer from CCPD from $1,879,284.41 to $1,969.284.41;
- 01-10-9001 Increase Building Permits from $80,000 to $82,000;
- 01-13-6573 Computer Equipment decrease from $94,000 to $4,000 ($90,000 Fiber Cable PD to GC allocate to Fund 07 Computer replacement plan to be fund by American Rescue Plan;
- 01-13-4504 Software Maintenance decrease from $290,321 to $255,321 ($20,000 INCODE to Cloud, $15,000 Microsoft Azure to Fund 07 Computer replacement plan to be fund by American Rescue Plan;
- 07-73-6573 Increase from $381,000 to $819,050 increase due to $90,000 Fiber Cable PD to GC, and $348,050 for IT Cybersecurity and infrastructure improvements including moving INCODE to the cloud, Microsoft Azure, and hardware upgrades all of which will be fund by American Rescue Plan;
- 07-71-9765 Decrease from $350,000 to $0 since the Fire Department SCBA since this will be cover by the American Rescue Plan.

With limited discussion on the matter, Council Member Mitcham moved to approve the City of Jersey Village 2021-2022 budget revisions which include changes in the General fund, Debt Service Fund, Capital Replacement Fund and Capital Improvement Fund. Council Member Wubbenhorst seconded the motion. The vote follows:

Ayes: Council Members Wasson, Sheppard, Mitcham, and Wubbenhorst

Nays: Council Member Singleton

The motion carried.

2. Consider Ordinance No. 2021-33, adopting the City of Jersey Village municipal budget for fiscal year 2021-2022.

Isabel Kato, Finance Director, introduced the item. Background information is as follows:

Council has held the public hearings on the proposed budget for fiscal year 2021-2022 and the proposed budget has been filed with the City Secretary.

Section 102-007 of the Local Government Code requires that upon conclusion of the public hearing on the budget, the City Council shall take action on the proposed budget. In addition, a vote to adopt the budget must be a record vote.

The staff recommends that Council adopt this budget for fiscal year 2021-2022.

DRAFT

REGULAR SESSION CITY COUNCIL MEETING PACKET FOR THE MEETING TO BE HELD ON SEPTEMBER 20, 2021

With limited discussion on the matter, Council Member Singleton moved to approve Ordinance No. 2021-33, adopting the City of Jersey Village municipal budget for fiscal year 2021-2022 with amendments to change the budget by removing the $20M bond amount in the CIP, by reducing the Golf Course Club House line item to zero and by reducing the City Hall line item back to its original amount as stated in last year's budget.

City Council discussed these three proposed changes to the 2021-2022 municipal budget. Some felt that the $20M bond item was included in the budget in order to give residents the option to vote on City projects. This aspect was discussed. In connection with same, the bond rating for the City was discussed. The debt rate was discussed and how it works. It was stated that the City's bond rating is based upon the ability of the City to pay debt and not on if the City pays debt. The $20M bond line item in the CIP was discussed further. Some wondered if we could wait to decide if we include this or not in the budget. Several options were discussed. Others members could not agree with eliminating the bond or the Golf Course Club House line item.

With no further discussion on the matter, Mayor Warren called for a second on Council Member Singleton's motion to amend the proposed budget. Accordingly, Council Member Wasson seconded the motion. The vote on the motion follows:

Ayes: Council Members Singleton and Wasson

Nays: Council Members Sheppard, Mitcham, and Wubbenhorst

The motion failed.

With no further discussion, Council Member Singleton moved to approve Ordinance No. 2021-33, adopting the City of Jersey Village municipal budget for fiscal year 2021-2022. Council Member Wubbenhorst seconded the vote.

The record vote follows:

Council Member Wasson:	Aye	Council Member Singleton:	Aye
Council Member Sheppard:	Aye	Council Member Wubbenhorst:	Aye
Council Member Mitcham:	Aye		

Mayor Warren, although present, did not vote.

The motion carried.

ORDINANCE NO. 2021-33

AN ORDINANCE APPROVING AND ADOPTING THE BUDGET OF THE CITY OF JERSEY VILLAGE, TEXAS, FOR THE FISCAL YEAR BEGINNING OCTOBER 1, 2021; MAKING APPROPRIATIONS AS REFLECTED IN SAID BUDGET; MAKING CERTAIN FINDINGS AND CONTAINING OTHER PROVISIONS RELATING TO THE SUBJECT; AND PROVIDING FOR SEVERABILITY.

DRAFT

REGULAR SESSION CITY COUNCIL MEETING PACKET FOR THE MEETING TO BE HELD ON SEPTEMBER 20, 2021

3. Conduct a separate vote to ratify the property tax increase reflected in the 2021-2022 budget adopted on August 16, 2021.

Isabel Kato, Finance Director, introduced the item. Background information is as follows:

Council has adopted a budget that will raise more total property taxes than last year's budget by $246,804.24 a 3.79 % increase from last year's budget, and of that amount $46,898 is tax revenue to be raised from new property added to the tax roll this year.

Section 102.007(c) of the Local Government Code states that a governing body adopting a budget that requires raising more revenue from property taxes than in the previous year, must conduct a separate vote to ratify the property tax increase reflected in the newly adopted budget.

This vote, must be a record vote that is in addition to and separate from the vote adopting the budget or the vote required to set the tax rate that is provided for by Chapter 26, Tax Code, or other law.

Mayor Warren explained the process and the order of the items on the agenda. He also explained the amount listed in the Public Hearing Notice for Tax Rate Increase, stating that the notice contained the maximum rate that City Council could approve without having to call an election. He explained that the adopted budget for FY 2021-2022 will need to be supported by a rate of $0.7425 or a 3.79% increase, which is comparable to current inflation rates.

With no further discussion on the matter, Council Member Wubbenhorst moved to ratify the property tax increase of 3.79% reflected in the newly adopted municipal budget for fiscal year 2021-2022. Council Member Singleton seconded the motion. The record vote follows:

Council Member Wasson:	Aye	Council Member Singleton:	Aye
Council Member Sheppard:	Aye	Council Member Wubbenhorst:	Aye
Council Member Mitcham:	Aye		

Mayor Warren, although present, did not vote.

The motion carried.

4. Conduct Public Hearing on proposed tax rate increase.

Mayor Warren opened the public hearing at 7:37 p.m. in order to give all interested persons the right to express support for or opposition to the proposed tax rate of 0.888379 per $100; a rate that exceeds the lower of the voter-approval rate or the no-new-revenue rate.

After opening the meeting, he called upon Isabel Kato, Finance Director to summarize the subject of the public hearing. Ms. Kato gave information outlining the proposal to set the

DRAFT

REGULAR SESSION CITY COUNCIL MEETING PACKET FOR THE MEETING TO BE HELD ON SEPTEMBER 20, 2021

tax rate at 0.888379 per $100; a rate that exceeds the lower of the voter-approval rate or the no-new-revenue rate.

In completing the Finance Director's summary, Mayor Warren called upon those signing up to speak as follows:

Simon Hughes, 15409 Lakeview Drive, Jersey Village, Texas (281) 380-9001 – Mr. Hughes spoke to City Council about the Public Hearing Notice on the Tax Rate Increase and negative comments he received concerning his social media posts covering same. He felt that based upon the Notice posted, his statements on social media were founded as he was trying to understand the posting. He went on to state that it is incumbent upon the City to explain the notice given the confusion it caused. He also voiced his concern about the increase being proposed in the tax rate. He felt that Council Members must and should respond to emails when residents voice concerns. He feels that this Council has a propensity to squandered tax payer monies. He objects to the proposed tax rate increase. He feels that many dollars could be taken out of the 2021-2022 budget in order to decrease the amount of monies needed to fund a balanced budget. He does not believe that the City needs to borrow monies.

Michael Stembridge, 15422 Jersey Drive, Jersey Village, Texas (713) 983-8647 – Mr. Stembridge spoke to City Council about the tax rate. He wants the rate to be set at the lowest rate possible. He feels that the City has done much work in terms of flood mitigation. He explained how this work has affected his home. He wants City Council to set the lowest tax rate possible, but he went on to explain that the $1M in the budget for the TITZ3 is needed. He does not support the Golf Course Clubhouse. He would rather see more flood mitigation projects. He wants his home elevated. The City has spent much money on these elevations and he wants his home elevated. He wants some of the dollars spent on resolving his flooding issues.

Augie Gentilucci, 15925 Congo Lane, Jersey Village, Texas (340) 514-3098 – Mr. Gentilucci stated that the numbers posted in the Notice of Hearing on Tax Rate Increase are very confusing. He feels it is up to the City to explain these numbers. As posted, when looking at the proposed rate and considering the increases in home evaluations, setting the proposed rate would exceed a 19% increase in taxes. He went on to explain that he believes that when evaluations go up, taxes should go down. In closing, he is against the proposed tax rate increase.

Mark Maloy, 7803 Hamilton Circle, Jersey Village, Texas (713) 461-1430 – Mr. Maloy spoke to City Council about the proposed tax rate increase. He wants the City to tell the residents of Jersey Village what the proposed rate will fund in terms of the entire budget. He went on to give additional information about the monies spent on the operation of the Jersey Meadows Golf Course. He told City Council that he attended the budget meetings in July. He stated that discussions in those meetings concerned a number of projects, but Council realized that there were not enough monies to cover the cost of the projects. As a

DRAFT

REGULAR SESSION CITY COUNCIL MEETING PACKET FOR THE MEETING TO BE HELD ON SEPTEMBER 20, 2021

result, discussions were had that an election could be conducted to fund projects thereby giving residents the option of choice. He feels that based upon those discussions the Council wants residents to take on additional debt to fund these projects, of which one is a Golf Course Convention Center. He feels this is poor management of the City's funds.

Judy Yarberry, 16102 Crawford, Jersey Village, Texas (832) 233-6748 – Ms. Yarberry spoke to City Council about the proposed tax rate. She is confused about the posted notice. She does not object to paying reasonable taxes if monies are spent wisely. She wants to insure that police and fire personnel are paid at or above market. She wants to use dollars to continue to improve flood mitigation. She wants tax incentives for businesses. She wants reasonable tax dollars to enhance city facilities. She is not in favor of approving a $20M debt obligation for construction projects. She believes a priority and focus should be on Village Center. She wants to postpone the bond for a few years. She wants transparency. She wants better communication. She thanks Council Members who do respond to emails. She feels it is Council's responsibility to respond.

With no other persons signing up to speak to express support for or opposition to the proposed tax rate of 0.888379 per $100; a rate that exceeds the lower of the voter-approval rate or the no-new-revenue rate, Mayor Warren closed the public hearing at 8:04 PM.

5. **Discuss and consider approval of a motion to set the tax rate for debt service for tax year 2021.**

Background information on this item is as follows: Adoption of the debt service tax rate must be a separate item on the agenda for the meeting. The Council must adopt the debt service tax rate by official action and the rate must equal the calculated and described debt service rate outlined in Section 26.04 (e) (3) (c) of the Tax Code.

Staff recommends that Council adopt the debt service tax rate of $.131562 per $100 value for the tax year 2021.

With limited discussion on the matter, Council Member Wubbenhorst moved to approve setting the Debt Service tax rate of $.131562 per $100 value for the year 2021. Council Member Singleton seconded the motion. The vote follows:

Ayes: Council Members Wasson, Sheppard, Mitcham, Singleton, and Wubbenhorst

Nays: None

The motion carried.

6. **Discuss and consider approval of a motion to set the tax rate for maintenance and operation for tax year 2021.**

Background information on this item is as follows: Adoption of the maintenance and operation tax rate must be a separate item on the agenda for the meeting. The adoption of this tax rate will take place after adopting the budget for the year.

DRAFT

REGULAR SESSION CITY COUNCIL MEETING PACKET FOR THE MEETING TO BE HELD ON SEPTEMBER 20, 2021

A Maintenance and Operation (M&O) tax rate of $.610938 per $100 value for the tax year 2021 is needed to fund the 2021-2022 Municipal Budget. However, the Governing Body is permitted to set an M&O tax rate no higher than $.756817, which is the Voter Approval M&O tax rate.

Mayor Warren stated that there were many good points made by residents concerning communication during the public hearing. He went on to explain that the law states in detail what the City is required to be put in statutory notices. Nonetheless, he recognizes that Council Members do have a responsibility to explain these notices. He went on to provide information about the City expenses and recurring costs as outlined in the adopted budget. He also explained that budget discussions were had in July and many items were cut from the proposed budget during the July meetings. He stated that it is a challenge to balance the desires of residents with the needs of the City. He went on to explain that the Council has continuously decreased taxes since 2015. He also pointed out that Council has increase the homestead exemptions.

Other Members of the Council pointed out that when reviewing your tax bill, it is important to see what the amount if for Jersey Village as there are many other entities listed in the bill you receive from the County.

There was further discussion and explaining of the numbers in the budget and how projects are going to be funded.

With no further discussion on the matter, Council Member Singleton moved to approve setting the Maintenance and Operation tax rate of $.610938 per $100 value for the year 2021. Council Member Wubbenhorst seconded the motion. The vote follows:

Ayes: Council Members Wasson, Sheppard, Mitcham, Singleton, and Wubbenhorst

Nays: None

The motion carried.

7. Consider Ordinance No. 2021-34, providing for the levy and collection of ad valorem taxes by the City of Jersey Village, Texas, for the year 2021.

Background information on this item is as follows: Council is required to adopt the ordinance setting the tax rate for debt service; setting the tax rate for maintenance and operation; and setting the total tax rate for the year 2021.

In setting the 2021 ad valorem tax rate, the Governing Body may not set a tax rate that exceeds the voter approval rate of $.888379; which, if set, is effectively a 28.57 percent increase in the tax rate compared to last year.

DRAFT

REGULAR SESSION CITY COUNCIL MEETING PACKET FOR THE MEETING TO BE HELD ON SEPTEMBER 20, 2021

In setting the rate, it should be noted that a rate of $.7425, which is effectively a 3.79 percent increase in the tax rate compared to last year, is needed to fund the 2021-2022 Municipal Budget.

Both rates exceed the no-new-revenue tax rate but not the voter-approval tax rate.

The vote on the ordinance setting a tax rate that exceeds the no-new-revenue tax rate must be a record vote, and at least 60 percent of the members of the governing body must vote in favor of the ordinance.

There was discussion about the rate increase and what that will mean to residents. In most cases, it was explained that the proposed increase may only increase the tax bill by $50.

Council also explained the budget increases and that most increases were for fire and police.

With no further discussion on the matter, Council Member Singleton moved to approve Ordinance No. 2021-34, providing for the levy and collection of ad valorem taxes by the City of Jersey Village, Texas, for the year 2021; providing for the date on which such taxes shall be due and payable; and providing for penalty and interest on all taxes not timely paid. I further move that property taxes be increased by the adoption of a tax rate of $0.7425, which is effectively a 3.79 percent increase in the tax rate. Council Member Wubbenhorst seconded the motion. The record vote follows:

Council Member Wasson:	Aye	Council Member Singleton:	Aye
Council Member Sheppard:	Aye	Council Member Wubbenhorst:	Aye
Council Member Mitcham:	Aye		

Mayor Warren, although present, did not vote.

The motion carried.

ORDINANCE NO. 2021-34

AN ORDINANCE PROVIDING FOR THE LEVY AND COLLECTION OF AD VALOREM TAXES BY THE CITY OF JERSEY VILLAGE, TEXAS, FOR THE YEAR 2021; PROVIDING FOR THE DATE ON WHICH SUCH TAXES SHALL BE DUE AND PAYABLE; PROVIDING FOR PENALTY AND INTEREST ON ALL TAXES NOT TIMELY PAID; REPEALING ALL ORDINANCES OR PARTS OF ORDINANCES INCONSISTENT OR IN CONFLICT HEREWITH; AND PROVIDING FOR SEVERABILITY.

E. CITY MANAGER'S REPORT

City Manager Bleess gave his report and mentioned that the City will be receiving additional monies from the State for water line projects.

DRAFT

REGULAR SESSION CITY COUNCIL MEETING PACKET FOR THE MEETING TO BE HELD ON SEPTEMBER 20, 2021

1. **Monthly Fund Balance Report, Enterprise Funds Report, Governmental Funds Report, Property Tax Collection Report – June 2021, General Fund Budget Projections as of July 2021, and Utility Fund Budget Projections – July 2021.**
2. **Fire Departmental Report and Communication Division's Monthly Report**
3. **Police Department Monthly Activity Report, Warrant Report, Staffing/Recruitment Report, and Police Open Records Requests**
4. **Municipal Court Collection Report, Municipal Court Activity Report, Municipal Court Courtroom Activity Report, Speeding and Stop Sign Citations within Residential Areas Report, and Court Proceeds Comparison Report**
5. **Public Works Departmental Status Report**
6. **Golf Course Monthly Report, Golf Course Financial Statement Report, Golf Course Budget Summary, and Parks and Recreation Departmental Report**
7. **Code Enforcement Report**

F. CONSENT AGENDA

The following items are considered routine in nature by the City Council and will be enacted with one motion and vote. There will not be separate discussion on these items unless requested by a Council Member, in which event the item will be removed from the Consent Agenda and considered by separate action.

Each Consent Agenda item appears below with background information. Item 3 has been pulled from the Consent Agenda for further discussion. Accordingly, Item 3 contains discussion information as well as Council's vote. The vote on Items 1 and 2 is found at the end of the Consent Agenda.

1. **Consider approval of the Minutes for the Regular Session Meeting held on July 19, 2021 and the Special Session Meetings held on July 14, 2021 and July 15, 2021 and the Work Session Meeting held on July 20, 2021.**

2. **Consider Resolution No. 2021-53, receiving the 2021 calculations for the no-new-revenue tax rate and the voter-approval tax rate, which were calculated using the certified estimate of taxable value required by Section 26.04 (c-2) of the Tax Code.**

   Background information for this item is as follows: The 86th Legislature passed SB2, which made substantial changes to the Tax Code.

   One of the major changes involves calculating the no-new-revenue tax rate (formally known as the effective tax rate) and the voter-approval tax rate (formally known as the rollback rate) based upon a certified estimate of taxable value as set out in the Tax Code at Section 26.04 (c-2).

   In accordance with Section 26.04 (c-2) these rates have been calculated and in accordance with Section 26.04(e) are being submitted to you for receipt.

DRAFT

REGULAR SESSION CITY COUNCIL MEETING PACKET FOR THE MEETING TO BE HELD ON SEPTEMBER 20, 2021

This item is to receive the 2021 calculations for the no-new-revenue tax rate and the voter-approval rate.

RESOLUTION NO. 2021-53

A RESOLUTION OF THE CITY COUNCIL OF THE CITY OF JERSEY VILLAGE, TEXAS, RECEIVING THE 2021 CALCULATIONS OF THE NO-NEW-REVENUE TAX RATE AND THE VOTER-APPROVAL TAX RATE, WHICH WERE CALCULATED USING THE CERTIFIED ESTIMATE OF TAXABLE VALUE REQUIRED BY SECTION 26.04 (C-2) OF THE TAX CODE.

3. **Consider Resolution No. 2021-54, authorizing the City Manager to enter into a Lease/Purchase Agreement with HP Financial Services for a new wide format scanner/print.**

Background information on this item is as follows: This lease is based on approved and existing funding in the 2020-2021 Budget. The current scanner/plotter used to produce CAD drawings is currently on a lease that expires in August 2021. This new lease is to allow for the replacement of equipment as planned for in the Computer Technology Replacement Plan. The existing 60-month lease was for $253.24/month. This new 60-month lease is for $283.00/month or $3,396/year. The equipment is being ordered from A&A Graphics Supply, an authorized HP Government Reseller, the lease is from HP Financial Services.

Staff recommends this lease with HP Financial Services for a wide format scanner / plotter per HP State of Texas DIR Contract DIR-TSO-4159.

Council Member Wasson removed this item from Consent for further discussion. In connection with same, Council discussed the new printer and asked questions concerning same. Director Blevins answered their questions and explained the proposed lease.

With no further discussion on the matter, Council Member Wubbenhorst moved to approve Resolution No. 2021-54, authorizing the City Manager to enter into a Lease/Purchase Agreement with HP Financial Services for a new wide format scanner/print. Council Member Wasson seconded the motion. The vote follows:

Ayes: Council Members Wasson, Sheppard, Mitcham, Singleton, and Wubbenhorst

Nays: None

The motion carried.

RESOLUTION NO. 2021-54

A RESOLUTION OF THE CITY COUNCIL OF THE CITY OF JERSEY VILLAGE, TEXAS, AUTHORIZING THE CITY MANAGER TO ENTER INTO A LEASE/PURCHASE AGREEMENT WITH HP FINANCIAL SERVICES FOR A NEW WIDE FORMAT SCANNER/PRINTER.

Item 3 was removed from the consent agenda. The discussion and vote for each removed item

DRAFT

REGULAR SESSION CITY COUNCIL MEETING PACKET FOR THE MEETING TO BE HELD ON SEPTEMBER 20, 2021

can be found under the appropriate Consent Agenda item. The vote for the remaining items NOT removed from the Consent Agenda is as follows:

Council Member Wubbenhorst moved to approve items 1 and 2 on the Consent Agenda. Council Member Singleton seconded the motion. The vote follows:

Ayes: Council Members Wasson, Sheppard, Mitcham, Singleton, and Wubbenhorst

Nays: None

The motion carried.

G. MAYOR AND COUNCIL COMMENTS

Pursuant to Texas Government Code § 551.0415, City Council Members and City staff may make a reports about items of community interest during a meeting of the governing body without having given notice of the report. Items of community interest include:

- Expressions of thanks, congratulations, or condolence;
- Information regarding holiday schedules;
- An honorary or salutary recognition of a public official, public employee, or other citizen, except that a discussion regarding a change in the status of a person's public office or public employment is not an honorary or salutary recognition for purposes of this subdivision;
- A reminder about an upcoming event organized or sponsored by the governing body;
- Information regarding a social, ceremonial, or community event organized or sponsored by an entity other than the governing body that was attended or is scheduled to be attended by a member of the governing body or an official or employee of the municipality; and
- Announcements involving an imminent threat to the public health and safety of people in the municipality that has arisen after the posting of the agenda.

Council Member Mitcham: Council Member Mitcham stated that considerable discussion is had with every decision the Council makes. She appreciates when residents attend meetings, especially budget meetings. She appreciates that Council works well together and thanked all Members for their explanations made on social media to help residents understand the tax rate process.

Council Member Sheppard: Council Member Sheppard had no comments

Council Member Wasson: Council Member Wasson stated that the budget sets the tone for the City for the budget year. He appreciates resident input as participation in the budget process is key. He does not like it when the process seems out of order, but most of that is out of Council's control given the laws that the City must follow. Nonetheless, he stated that he will work on better communication with residents. He reminded all to be prepared, as there is a storm in the Gulf.

Council Member Singleton: Council Member Singleton had no comments

Council Member Wubbenhorst: Council Member Wubbenhorst had no comments

DRAFT

REGULAR SESSION CITY COUNCIL MEETING PACKET FOR THE MEETING TO BE HELD ON SEPTEMBER 20, 2021

Mayor Warren: Mayor Warren was thankful for the comments made during Citizen's Comments concerning whether City Council should make decisions for voters should they make decisions based upon what the voter feels is best. In response, he read portions from Edwin Burke's November 3, 1774 speech to the electors of Bristol as this speech provides good direction in that Mr. Burke states "it is his duty to sacrifice his repose, his pleasures, his satisfactions, to theirs; and above all, ever, and in all cases, to prefer their interest to his own."

N. ADJOURN

There being no further business on the Agenda the meeting was adjourned at 8:32 p.m.

_____
Lorri Coody, City Secretary

CITY OF JERSEY VILLAGE TEXAS A TEXAS STAR COMMUNITY

DRAFT

REGULAR SESSION CITY COUNCIL MEETING PACKET FOR THE MEETING TO BE HELD ON SEPTEMBER 20, 2021

CITY COUNCIL
CITY OF JERSEY VILLAGE, TEXAS
AGENDA REQUEST

AGENDA DATE: September 20, 2021 **AGENDA ITEM**: G2

AGENDA SUBJECT: Review of Investment Policy

Department/Prepared By: Isabel Kato **Date Submitted:** August 18, 2021

EXHIBITS: Resolution No. 2021-55
Exhibit A - Investment Policy

BUDGETARY IMPACT:		
	Required Expenditure:	$0.00
	Amount Budgeted:	$0.00
	Appropriation Required:	$0.00

BACKGROUND INFORMATION:

The Texas State Legislature passed the Public Funds Investment Act in 1994 in response to financial crises in California caused when a public agency invested heavily in risky funds. To ensure public funds in Texas would not be placed in a similar situation, the act was drafted, defining the means and limitations public agencies must comply with before investing the funds. All local and state governments are bound by provisions dictated by the Public Fund Investment Act. All agencies covered by the Public Funds Investment Act must write an investment plan. This plan must address the safety of the investment and also list the types of funds into which the agency is entitled to invest. The Public Funds Investment Act places several requirements on investments made by public agencies. One of the allowable investment tools are the investment pools. All investment pools must be continuously rated at AAA or AAA-m by nationally recognized ratings agency. In the case of the City of Jersey Village, we invest in TexPool and in the City's depository bank Wells Fargo. Tex Pool currently provides investment services to over 2,000 communities throughout the State of Texas and it is also rated AAA-m by Standard & Poor's. This rating is the highest rating a local government investment pool can achieve.

Furthermore, The Texas Government Code, Public Funds Investment Act Section 2256.005(e) requires that Council review the City's investment policy and investment strategies not less than annually, and that Council adopt a written instrument by rule, order, ordinance, or resolution stating that it has reviewed the investment policy and investment strategies and that the written instrument so adopted shall record any changes made to either the investment policy or investment strategies.

The investment policy submitted for Council Review with this item contains no changes from the policy last reviewed and approved by Council on September 21, 2020.

Staff recommends that the investment policy and investment strategies be reviewed and approved in accordance with the Public Funds Investment Act.

RECOMMENDED ACTION:

Motion: To approve Resolution 2021-55, reviewing and approving the investment policy and investment strategies used for city funds in compliance with the Texas Government Code.

REGULAR SESSION CITY COUNCIL MEETING PACKET FOR THE MEETING TO BE HELD ON SEPTEMBER 20, 2021

RESOLUTION NO. 2021-55

A RESOLUTION OF THE CITY OF JERSEY VILLAGE, TEXAS, REVIEWING AND APPROVING THE INVESTMENT POLICY AND INVESTMENT STRATEGIES USED FOR CITY FUNDS IN COMPLIANCE WITH THE TEXAS GOVERNMENT CODE.

BE IT RESOLVED BY THE CITY COUNCIL OF THE CITY OF JERSEY VILLAGE, TEXAS:

That the City of Jersey Village Investment Policy, a copy of which is attached hereto as "Exhibit A" and made a part hereof, is hereby reviewed and approved in compliance with the Texas Government Code, Public Funds Investment Act Section 2256.005(e).

PASSED AND APPROVED this the **20th** day of **September**, A.D., **2021.**

_____
Bobby Warren, Mayor

ATTEST:

_____
Lorri Coody, City Secretary

CITY OF JERSEY VILLAGE TEXAS A TEXAS STAR COMMUNITY

REGULAR SESSION CITY COUNCIL MEETING PACKET FOR THE MEETING TO BE HELD ON SEPTEMBER 20, 2021

CITY OF JERSEY VILLAGE ADMINISTRATIVE PROCEDURES	
SUBJECT: Investment Policy	**EFFECTIVE DATE: 12/16/96**
DEPARTMENT HEAD APPROVAL: MC	**ORIGINAL DATE:**
CITY MANAGER APPROVAL: MC	**REVIEW/APPROVE:** 09/20/2021

TABLE OF CONTENTS

I. INVESTMENT AUTHORITY AND SCOPE OF POLICY 1
- General Statement 1
- Funds Included 1
- City's Investment Officer 1

II. INVESTMENT OBJECTIVES 2
- General Statement 2
- Safety and Maintenance of Adequate Liquidity 2
- Diversification 2
- Yield 2
- Maturity 2
- Quality and Capability of Investment Management 2
- Investment Strategies 2

III. INVESTMENT TYPES 3
- Prohibited 4

IV. INVESTMENT RESPONSIBILITY AND CONTROL 5
- Investment Institutions Defined 5
- Qualifications for Approval of Broker/Dealers 5
- Standards of Operation 5
- Delivery Vs. Payment 5
- Audit Control 5
- Standard of Care 6

V. INVESTMENT REPORTING AND PERFORMANCE EVALUATION 6
- Quarterly Report 6
- Notification of Investment Changes 7

VI. INVESTMENT COLLATERAL SAFEKEEPING 7
- Collateral or Insurance 7
- Safekeeping 7

ATTACHMENT A 9
- Investment Strategy 9

REGULAR SESSION CITY COUNCIL MEETING PACKET FOR THE MEETING TO BE HELD ON SEPTEMBER 20, 2021

I. INVESTMENT AUTHORITY AND SCOPE OF POLICY

General Statement

This policy serves to satisfy the statutory requirements of Local Government Code 116.112 and Government Code Chapter 2256 to define and adopt a formal investment policy. This policy will be reviewed at least annually according to Section 2256.005(e).

Funds Included

This investment policy applies to all financial assets of all funds of the City of Jersey Village, Texas, at the present time and any funds to be created in the future and any other funds held by the City, unless expressly prohibited by law or unless it is in contravention of any depository contract between the City and any bank which may have a depository contract with the City.

City's Investment Officer

The City Finance Director shall be the City's investment officers. In accordance with Sec. 116.112(a, Local Government Code and/or Chapter 2256, Sec. 2256.005(f) and (g), the investment officer may invest City funds that are not immediately required to pay obligations of the City.

If the investment officer has a personal business relationship with an entity, or is related within the second degree by affinity or consanguinity to an individual, seeking to sell an investment to the City, the investment officer must file a statement disclosing that personal business interest or relationship with the Texas Ethics Commission and the City Council in accordance with Government Code 2256.005(i).

II. INVESTMENT OBJECTIVES

General Statement

The City will invest according to investment strategies for each fund that are adopted by City Council and in accordance with this investment policy and written administrative procedures and federal and state laws.

Safety and Maintenance of Adequate Liquidity

The City of Jersey Village is concerned with the return of its principal; therefore, safety of principal is a primary objective in any and all investment

The City's investment portfolio will be structured in conformance with an asset/liability management plan which provides for liquidity necessary to pay obligations as they become due.

REGULAR SESSION CITY COUNCIL MEETING PACKET FOR THE MEETING TO BE HELD ON SEPTEMBER 20, 2021

Diversification

It will be the policy of the City of Jersey Village to diversify its portfolio to eliminate the risk of loss resulting from over concentration of assets in a specific maturity, a specific issuer or a specific class of investments. Investments of the City shall always be selected to provide for stability of income and reasonable liquidity.

Yield

It is the objective of the City to earn the maximum rate of return allowed on its investments within the policies imposed by its safety and liquidity objectives, investment strategies for each fund, and state and federal law governing investment of public funds.

Maturity

Portfolio maturities will be structured to meet the obligations of the City first and then to achieve the highest return of interest. When the City has funds that will not be needed to meet current-year obligations, maturity restraints will be imposed based upon the investment strategy for each fund. The maximum allowable stated maturity of any individual investment owned by the City is six months.

Quality and Capability of Investment Management

It is the City's policy to provide the training required by the Public Funds Act, Sec. 2256.008 and periodic training in investments for the City Investment Officer and subordinates through courses and seminars offered by professional organizations and associations in order to insure the quality, capability and currency of the City Investment Officer in making investment decisions. The investment officer shall attend at least one training session relating to the office's responsibility under the act within 12 months after assuming the duties of investment officer.

Investment Strategies

In accordance with the Public Funds Investment Act, Section 2256.005(d), a separate written investment strategy will be developed for each of the funds under the City of Jersey Village's control. Each investment strategy must describe the investment objectives for the particular fund using the following priorities of importance:

(1) understanding of the suitability of the investment to the financial requirements of the entity;
(2) preservation and safety of principal;
(3) liquidity;
(4) marketability of the investment if the need arises to liquidate the investment before maturity;
(5) diversification of the investment portfolio;

REGULAR SESSION CITY COUNCIL MEETING PACKET FOR THE MEETING TO BE HELD ON SEPTEMBER 20, 2021

(6) yield; and
(7) maturity restrictions.

Attachment A include investment strategies for all funds. In accordance with the Public Funds Investment Act, Section 2256.005(e), investment strategies will be reviewed at least annually. The review will be done within 90 days after September 30, the closing date of the City's fiscal year.

III. INVESTMENT TYPES

The City of Jersey Village Investment Officer shall use any or all of the following authorized investment instruments consistent with governing law (Government Code 2256):

A. Except as provided by Government Code 2256.009(b), the following are authorized investments:

(1) obligations of the United States or its agencies and instrumentalities;
(2) direct obligations of the State of Texas or its agencies and instrumentalities;
(3) collateralized mortgage obligations directly issued by a federal agency or instrumentality of the United States, the underlying security for which is guaranteed by an agency or instrumentality of the United States;
(4) other obligations, the principal and interest of which are unconditionally guaranteed or insured by, or backed by the full faith and credit of, this state or the United States or their respective agencies and instrumentalities; and
(5) obligations of states, agencies, counties, cities, and other political subdivisions of any state rated as to investment quality by a nationally recognized investment rating firm not less than A or its equivalent.

B. Certificates of deposit if issued by a state or national bank domiciled in this state or a savings and loan association domiciled in this state and is:

(1) guaranteed or insured by the Federal Deposit Insurance Corporation or its successor; or
(2) secured by obligations that are described by Section 2256.009(a) of the Public Funds Investment Act, including mortgage backed securities directly issued by a federal agency or instrumentality that have a market value of not less than the principal amount of the certificates, but excluding those mortgage backed securities of the nature described by Section 2256.009(b) of the Public Funds Investment Act; or

C. A fully collateralized repurchase agreement, as defined in the Public Funds Investment Act, that:

(1) has a defined termination date;
(2) is secured by obligations described by Section 2256.009(a)(1) of the Public

REGULAR SESSION CITY COUNCIL MEETING PACKET FOR THE MEETING TO BE HELD ON SEPTEMBER 20, 2021

Funds Investment Act; and

(3) requires the securities being purchased by the City to be pledged to the City, held in the City's name, and deposited at the time the investment is made with the City or with a third party selected and approved by the City; and
(4) is placed through a primary government securities dealer, as defined by the Federal Reserve, or a financial institution doing business in this state.

Notwithstanding any law, the term of any reverse security repurchase agreement may not exceed 90 days after the date the reverse security repurchase agreement is delivered.

Money received by the City under the terms of a reverse security repurchase agreement shall be used to acquire additional authorized investments, but the term of the authorized investments acquired must mature not later than the expiration date stated in the reverse security repurchase agreement.

E. Eligible investments pools (as discussed in the Public Funds Investment Act, Sec. 2256.016-2256.019) if the City Council by resolution authorizes investment in the particular pool. An investment pool shall invest the funds it receives from entities in authorized investments permitted by the Public Funds Investment Act. The City by contract may delegate to TexPool the authority to hold legal title as custodian of investments purchased with its local funds.

Prohibited

The City of Jersey Village Investment Officer does not have authority to use any of the following investment instruments which are strictly prohibited:

(1) obligations whose payment represents the coupon payments on the outstanding principal balance of the underlying mortgage-backed security collateral and pay no principal;
(2) obligations whose payment represents the principal stream of cash flow from the underlying mortgage-backed security collateral and bears no interest;
(3) collateralized mortgage obligations that have a stated final maturity date of greater than 10 years; and
(4) collateralized mortgage obligations the interest rate of which is determined by an index that adjusts opposite to the changes in a market index.

REGULAR SESSION CITY COUNCIL MEETING PACKET FOR THE MEETING TO BE HELD ON SEPTEMBER 20, 2021

IV. INVESTMENT RESPONSIBILITY AND CONTROL

Investment Institutions Defined

The City of Jersey Village Investment Officer shall invest City funds with any or all of the following institutions or groups consistent with federal and state law and the current depository bank contract:

(1) any depository bank
(2) Other state or national banks domiciled in Texas that are insured by FDIC
(3) TexPool

Qualifications for Approval of Broker/Dealers

In accordance with 2256.005(k), a written copy of this investment policy shall be presented to any person seeking to sell to the City an authorized investment. The registered principal of the business organization seeking to sell an authorized investment shall execute an affidavit substantially to the effect that the registered principal has:

(1) received and thoroughly reviewed the investment policy of the City; and
(2) acknowledged that the City has implemented reasonable procedures and controls in an effort to preclude imprudent investment activities arising out of investment transactions conducted between the City and the organization.

The investment officer may not buy any securities from a person who has not delivered to the City an affidavit in substantially the form provided above according to Section 2256.005(1).

Standards of Operation

The City Investment Officer shall develop and maintain written administrative procedures for the operation of the investment program, consistent with this investment policy.

Delivery Vs. Payment

It will be the policy of the City that all Treasury Bills, Notes and Bonds and Government Agencies' shall be purchased using the "Delivery vs. Payment" (DVP) method through the Federal Reserve System. By so doing, City funds are not released until the City has received, through the Federal Reserve wire, the securities purchased.

Audit Control

The City of Jersey Village City Council, will have an annual financial audit of all City funds by an independent auditing firm, as well as an annual compliance audit of management controls on investments and adherence to the City established investment policies in accordance with Gov. Code 2256.005(m)

REGULAR SESSION CITY COUNCIL MEETING PACKET FOR THE MEETING TO BE HELD ON SEPTEMBER 20, 2021

Standard of Care

In accordance with Government Code 2256.006, investments shall be made with the same judgment and care, under prevailing circumstances, that a person of prudence, discretion, and intelligence would exercise in the management of the person's own affairs, not for speculation, but for investment, considering the probable safety of capital and the probable income to be derived. Investment of funds shall be governed by the following investment objectives, in order of priority: preservation and safety of principal; liquidity; and yield.

In determining whether an investment officer has exercised prudence with respect to an investment decision, the determination shall be made taking into consideration:

(1) the investment of all funds, or funds under the City's control, over which the officer had responsibility rather than a consideration as to the prudence of a single investment; and
(2) whether the investment decision was consistent with the written investment policy of the City.

V. INVESTMENT REPORTING AND PERFORMANCE EVALUATION

Quarterly Report

In accordance with Government Code 2256.023, the Investment Officer shall prepare and submit to the City Council not less often than quarterly a written report of investment transactions for all funds for the preceding reporting period within a reasonable time after the end of the period. The report must:

(1) describe in detail the investment position of the City on the date of the report;
(2) be prepared by the Investment Officer;
(3) be signed by Investment Officer;
(4) contain a summary statement of each pooled fund group that states the:
    a. beginning market value for the reporting period;
    b. additions and changes to the market value during the period; and
    c. ending market value for the period;
(5) state the book value and market value of each separately invested asset at the beginning and end of the reporting period by the type of asset and fund type invested;
(6) state the maturity date of each separately invested asset that has a maturity date;
(7) state the account or fund or pooled group fund in the City for which each individual investment was acquired; and
(8) state the compliance of the investment portfolio of the City as it relates to:
    a. the investment strategy expressed in the City's investment policy; and
    b. relevant provisions of this chapter.

REGULAR SESSION CITY COUNCIL MEETING PACKET FOR THE MEETING TO BE HELD ON SEPTEMBER 20, 2021

(9) state the total rate of return.
(10) state the Market Value of pledged securities.

Notification of Investment Changes

It shall be the duty of the City Investment Officers to notify the City Council of any significant changes in current investment methods and procedures prior to their implementation, regardless of whether they are authorized by this policy or not.

VI. INVESTMENT COLLATERAL SAFEKEEPING

Collateral or Insurance

The City of Jersey Village Investment Officer shall insure that all City funds are fully collateralized or insured consistent with federal and state law and the current depository contract. Unless the City approves a surety bond as provided by law, the depository bank shall secure the funds of the City by pledging with the City, subject to the approval of the City as to kind and vale, "investment securities' as defined by Article 2529b-1, Vernon's Texas Civil Statutes.

The securities pledged shall be transferred to and held by hereinafter referred to as the "Safekeeping Bank". The securities pledged shall have a separate financial institution approved by the City, a market value greater than or equal to one hundred percent (100%) of the funds which the City may have on deposit at any one time, reduced by the amount of Federal Deposit Insurance Corporation (FDIC) insurance available. Should the market value of the securities pledged ever be less than one hundred percent (100%) of the funds secured, the Bank shall immediately cause additional securities approved by the City to be pledged with the City, in such aggregate amount as may be necessary to restore the market value of the securities pledged to one hundred percent (100%) of the amount of funds secured. The Bank shall have the right to substitute or withdraw pledged securities upon obtaining prior written approval of the City.

The City Council may, by written order, require the Depository bank to execute a new bond or pledge additional or other securities at any time the City Council considers it advisable or necessary for protection of the City. If the Depository Bank fails for any reason to comply within five (5) days of service of the order, the City may terminate this Contract. The City Council must approve all securities prior to their being pledged. Securities may only be released form pledge by resolution of the City Council. The City Council's executed resolution, or a certified copy thereof, constitutes written proof of the release.

Safekeeping

All purchased securities shall be held in safekeeping by the City, by a third party financial institution, or by the Federal Reserve Bank.

All certificates of deposit, insured by the FDIC, purchased outside the Depository Bank shall be held

REGULAR SESSION CITY COUNCIL MEETING PACKET FOR THE MEETING TO BE HELD ON SEPTEMBER 20, 2021

in safekeeping by either the City or a third party financial institution.

All pledged securities by the Depository Bank shall be held in safekeeping by the City, by a third party financial institution, or a Federal Reserve Bank.

The security agreement(s) for all purchased securities will adhere to the Financial Institutions Reform, Recovery, and Enforcement Act of 1989 (FIRREA) ə 1823(e), guidelines, which requires that to be valid against the FDIC a security agreement, including a pledge of collateral for a deposit, must satisfy the following requirements:

1. The pledge must be in writing.
2. The pledge agreement must be approved by the depository's board of directors or loan committee, and that approval must be reflected in the minutes of the board or committee.
3. The pledge agreement must be an official record of the depository from the time it was executed.

REGULAR SESSION CITY COUNCIL MEETING PACKET FOR THE MEETING TO BE HELD ON SEPTEMBER 20, 2021

ATTACHMENT A

Investment Strategy

The City of Jersey Village maintains portfolios which utilize three specific investment strategy considerations designed to address the unique characteristics of the fund groups represented in the portfolios:

A. Investment strategies for operating funds and commingled pools containing operating funds have as their primary objective to assure that anticipated cash flows are matched with adequate investment liquidity. The secondary objective is to create a portfolio structure which will experience minimal volatility during economic cycles. This may be accomplished by purchasing high quality, short-to-medium-term securities which will complement each other in a laddered or barbell maturity structure. The dollar weighted average maturity of 365 days or less will be calculated using the stated final maturity date of each security.

B. Investment strategies for debt service funds shall have as the primary objective the assurance of investment liquidity adequate to cover the debt service obligation on the required payment date. Securities purchased shall not have a stated final maturity date which exceeds the debt service payment date.

C. Investment strategies for special projects or special purpose fund portfolios will have as their primary objective to assure that anticipated cash flows are matched with adequate investment liquidity. The stated final maturity dates of securities held should not exceed the estimated project completion date.

The City may use TexPool, to accomplish this strategy.

REGULAR SESSION CITY COUNCIL MEETING PACKET FOR THE MEETING TO BE HELD ON SEPTEMBER 20, 2021

CITY COUNCIL
CITY OF JERSEY VILLAGE, TEXAS
AGENDA REQUEST DISCUSSION FORM

AGENDA DATE: September 20, 2021

AGENDA SUBJECT: Appointment of the City Health Officer

Department/ Prepared By: Lorri Coody, City Secretary **Date Submitted:** August 18, 2021

EXHIBITS: Resolution No. 2021-56

BUDGETARY IMPACT:	Required Expenditure:	$	0,000.00
	Amount Budgeted:	$	0,000.00
	Appropriation Required:	$	0,000.00

CITY MANAGER APPROVAL:

BACKGROUND INFORMATION:

State law requires that a city appoint to office a City Health Officer for a two year term and should be reappointed at the end of the term. Dr. Anh Dang, Center Medical Director for Concentra Medical Centers has agreed to serve in this capacity.

Staff respectfully recommends the approval of the reappointment of Dr. Anh Dang of Concentra Medical Centers for a term to expire September 30, 2023.

RECOMMENDED ACTION:

MOTION: To approve Resolution No. 2021-56, appointing Dr. Anh Dang as Health Officer for the City of Jersey Village.

REGULAR SESSION CITY COUNCIL MEETING PACKET FOR THE MEETING TO BE HELD ON SEPTEMBER 20, 2021

RESOLUTION NO. 2021-56

A RESOLUTION OF THE CITY COUNCIL OF THE CITY OF JERSEY VILLAGE, TEXAS, APPOINTING CITY HEALTH OFFICER.

* * * * *

BE IT RESOLVED BY THE CITY COUNCIL OF THE CITY OF JERSEY VILLAGE, TEXAS:

That Dr. Anh Dang, Center Medical Director for Concentra Medical Centers shall serve in the capacity of City Health Officer for the City of Jersey Village for the term that begins on October 1, 2021 and expires on September 30, 2023.

PASSED AND APPROVED this the **20th** day of **September 2021**.

_____
Bobby Warren, Mayor

ATTEST:

CITY OF JERSEY VILLAGE TEXAS A TEXAS STAR COMMUNITY

_____
Lorri Coody, City Secretary

CITY COUNCIL
CITY OF JERSEY VILLAGE, TEXAS
AGENDA REQUEST

AGENDA DATE: September 20, 2021 **AGENDA ITEM:** G4

AGENDA SUBJECT: Consider Resolution No. 2021-57, approving the 2021 Flood Insurance Assessment.

Department/Prepared By: Austin Bleess **Date Submitted:** August 18, 2021

EXHIBITS: Resolution No. 2021-57
EX A – 2021 Flood Insurance Assessment

BUDGETARY IMPACT:		
	Required Expenditure:	$ 0.00
	Amount Budgeted:	$ 0.00
	Appropriation Required:	$ 0.00

BACKGROUND INFORMATION:

As part of the Community Rating System (CRS) program the City of Jersey Village annually conducts a Flood Insurance Assessment (FIA). A FIA is an analysis of a community's level of flood insurance coverage that identifies where increased coverage would be beneficial.

As part of this the City has collected information form the Community Information System on four main topics. Those topics are:

1. Insurance Overview
2. Policies by building occupancy
3. Policies by FIRM Zone
4. Pre- and post-FIRM policy summary

Overall the Jersey Village has 60.3% of its buildings covered by flood insurance. Of the buildings in the SFHA the coverage rate is 75.4%. The rates are not bad; however, given the flooding our region has experienced over the past several years these rates could be higher.

Staff concludes that more efforts could be made to bring awareness to the need of flood insurance, especially to those in Zone X. As such staff is recommending more action be taken to increase awareness of flood insurance and encouragement of people to buy it. Staff will put more information about flood insurance in the JV Star and similar citywide outreaches. Staff will also send a letter to everyone in the SFHA.

The full assessment is included in the meeting packet as Exhibit A to the Resolution.

RECOMMENDED ACTION:

Motion: To approve Resolution 2021-57, approving the 2021 Flood Insurance Assessment.

REGULAR SESSION CITY COUNCIL MEETING PACKET FOR THE MEETING TO BE HELD ON SEPTEMBER 20, 2021

RESOLUTION NO. 2021-57

A RESOLUTION OF THE CITY COUNCIL OF THE CITY OF JERSEY VILLAGE, TEXAS, APPROVING THE 2021 FLOOD INSURANCE ASSESSMENT.

WHEREAS, The City of Jersey Village is working to join the Community Rating System (CRS); and

WHEREAS, CRS recommends a Flood Insurance Assessment so trends in flood insurance may be easily tacked;

NOW THEREFORE BE IT RESOLVED BY THE CITY COUNCIL OF THE CITY OF JERSEY VILLAGE, TEXAS:

Section 1. The City Council approves the 2021 Flood Insurance Assessment attached hereto as Exhibit A.

PASSED AND APPROVED this 20th day of September 2021.

_____
Bobby Warren, Mayor

ATTEST:

_____
Lorri Coody, City Secretary

REGULAR SESSION CITY COUNCIL MEETING PACKET FOR THE MEETING TO BE HELD ON SEPTEMBER 20, 2021

Flood Insurance Assessment

As part of the Community Rating System (CRS) program the City of Jersey Village annually conducts a Flood Insurance Assessment (FIA). A FIA is an analysis of a community's level of flood insurance coverage that identifies where increased coverage would be beneficial.

As part of this the City has collected information form the Community Information System on four main topics. Those topic are:

1. Insurance Overview
2. Policies by building occupancy
3. Policies by FIRM Zone
4. Pre- and post-FIRM policy summary

Level of Flood Insurance Coverage

In Jersey Village there are approximately 2,309 buildings. Of that number 727 are in a Special Flood Hazard Area (SFHA). The city has reviewed summary data for building occupancy, which provides the number of policies, the premium paid, and the amount of insurance coverage for four categories of buildings. City staff has also reviewed the average amount of coverage by category.

The data shows that most buildings that have flood insurance are fairly well covered.

	Policies In Force	Premium	Insurance in Force	Average Coverage
Single Family	1,360	$ 1,045,448	$ 426,422,100	$ 313,546
2-4 Family	-	$ -	$ -	
All other Residential	1	$ 158	$ 30,000	$ 30,000
Non-Residential	31	$ 99,721	$ 15,237,500	$ 491,532
Total	1,392	$ 1,145,327	$ 441,689,600	

In reviewing the data based upon where the flood insurance policies exist it shows that not all buildings in the SFHA are covered. It also shows that there are many buildings in Zone X that are not covered. The data is below:

	Policies In Force	Premium	Insurance in Force
A1-30 & AE Zones	548	$ 694,778	$ 157,952,300
A Zones			
X Zone Standard	95	$ 113,317	$ 29,093,300
X Zone Preferred	749	$ 337,232	$ 254,644,000

Staff concludes that more efforts could be made to bring awareness to the need of flood insurance, especially to those in Zone X. As such staff is recommending more action be taken to increase awareness of flood insurance and encouragement of people to buy it.

CITY COUNCIL - CITY OF JERSEY VILLAGE, TEXAS - AGENDA REQUEST

AGENDA DATE: September 20, 2021 **AGENDA ITEM**: G5

AGENDA SUBJECT: Consider Ordinance No. 2021-36, approving the final Financing Plan and Project Plan for the Tax Increment Reinvestment Zone Number 3.

Department/Prepared By: Austin Bleess, City Manager **Date Submitted**: August 19, 2021

EXHIBITS: Ordinance No. 2021-36
EXA – TIRZ3 Finance and Project Plan

BUDGETARY IMPACT:	Required Expenditure:	$
	Amount Budgeted:	$
	Appropriation Required:	$

BACKGROUND INFORMATION:
On March 15, 2021 the City Council created TIRZ 3 and approved a preliminary Project and Financing Plan for the TIRZ. The TIRZ Board was tasked with creating a final Project and Financing Plan, using the preliminary one as the starting point.

The Board has reviewed the preliminary plan and has made some changes to the plan. That plan is being presented here tonight and being recommended by the Board for approval. A highlight of the changes from the preliminary plant to this plan are as follows.

As part of the estimated project costs (starting on page 8 of the plan) the Board thought the plan should contemplate all 31 properties taking part in the project. So the costs now consider all 31 homes being a part.

They also felt the price point for which the purchase of the homes was contemplated were low, especially given the current market conditions. As such staff utilized information from Redfin.com and Zillow.com to help find prices that might be more accurate than relying on the HCAD data. This increased the average purchase price contemplated in the budget to $300,000.

The estimated project costs per home break down as follows:
$300,000 – Property Acquisition
$25,000 – Demolition costs
$3,000 – Administration costs (appraisals, submitting ICC paperwork, etc.)

The total estimated costs of the TIRZ are $10,168,000. As noted in the Plan "it is anticipated that after some homes are redeveloped with assistance from the TIRZ, the market may prove these redevelopments to be successful without TIRZ assistance". This would mean these costs may not be as high when they are all completed.

The plan now talks about the possibility of using revolving loan funds from the state to help finance the project. This does not commit to the use of loan funds, but simply adds them as an option that could be considered at a future date.

Those are the main changes from the Preliminary Plan to this Final Plan. The TIRZ 3 Board recommends the Council approve the plan. Staff recommends approval.

RECOMMENDED MOTION:
To approve Ordinance No. 2021-36, approving the final Financing Plan and Project Plan for the Tax Increment Reinvestment Zone Number 3.

REGULAR SESSION CITY COUNCIL MEETING PACKET FOR THE MEETING TO BE HELD ON SEPTEMBER 20, 2021

REGULAR SESSION CITY COUNCIL MEETING PACKET FOR THE MEETING TO BE HELD ON SEPTEMBER 20, 2021

ORDINANCE NO. 2021-36

AN ORDINANCE OF THE CITY OF JERSEY VILLAGE, TEXAS, APPROVING THE FINAL FINANCING PLAN AND PROJECT PLAN FOR THE TAX INCREMENT REINVESTMENT ZONE NUMBER 3.

WHEREAS, on March 15, 2021, City Council passed Ordinance 2021-14, establishing the Tax Increment Reinvestment Zone Number Three (TIRZ) and creating a Board of Directors for the TIRZ; and

WHEREAS, state law requires the Board of Directors of the TIRZ to prepare and adopt a financing plan and project plan for the TIRZ and submit the plan to the City Council for approval; and

WHEREAS, on August 10, 2021, the Board of Directors for the TIRZ adopted the Final Financing and Project Plan for the TIRZ and presented same to City Council on September 20, 2021 for consideration; and

WHEREAS, the City Council of the City of Jersey Village has determined that the Final Financing Plan and Project Plan for the Tax Increment Reinvestment Zone Number 3 as presented by the Board of Directors meets all state law requirements and should be approved; **NOW THEREFORE**,

BE IT ORDAINED BY THE CITY COUNCIL OF THE CITY OF JERSEY VILLAGE, TEXAS:

Section 1. That the facts and matter set forth in the preamble of this Ordinance are hereby found to be true and correct.

Section 2. That the Final Financing Plan and Project Plan for the Tax Increment Reinvestment Zone Number 3 adopted by the Board of Directors on August 10, 2021 and attached hereto and made a part hereof as Exhibit A, is feasible and is hereby approved.

Section 3. In the event any clause, phrase, provision, sentence, or part of this Ordinance or the application of the same to any person or circumstance shall for any reason be adjudged invalid or held unconstitutional by a court of competent jurisdiction, it shall not affect, impair, or invalidate this Ordinance as a whole or any part of the same notwithstanding the omission of any such part thus declared to be invalid or unconstitutional, whether there be one or more parts.

PASSED, APPROVED, AND ADOPTED this 20th day of September 2021.

ATTEST:

_____
Bobby Warren, Mayor

_____
Lorri Coody, City Secretary

CITY OF JERSEY VILLAGE TEXAS A TEXAS STAR COMMUNITY



PROJECT AND FINANCING PLAN

TAX INCREMENT REINVESTMENT ZONE NUMBER 3

CITY OF JERSEY VILLAGE

APPROVED BY TIRZ 3 BOARD
AUGUST 10, 2021

APPROVED BY CITY COUNCIL
ORDINANCE NUMBER 2021-36
SEPTEMBER 20, 2021

REGULAR SESSION CITY COUNCIL MEETING PACKET FOR THE MEETING TO BE HELD ON SEPTEMBER 20, 2021

Contents

Introduction 3
Map 1: Location of Proposed Tax Increment Reinvestment Zone 3
Benefits of the District 4
Preliminary Project Plan 4
Existing Uses and Conditions 5
Figure 1: Current Land Uses 5
Map 2: Existing Uses and conditions of land within and around the TIRZ. 6
Map 3: The existing land use zoning within the TIRZ. 6
Ordinance Changes 8
Non-Project Costs 8
Method of Relocation 8
Preliminary Financing Plan 8
Financial Plan Narrative 8
Estimated Project Costs 8
Kind, Number and Location of Proposed Public Improvements 9
Economic Feasibility 9
Estimate of Bonded Indebtedness To Be Incurred 9
Estimated Time When Monetary Obligations Are To Be Incurred 10
Methods and Sources of Financing 10
Duration of Zone 11
Current Appraised Value of Taxable Real Property 11
Estimated Captured Appraised Value By Year 11

REGULAR SESSION CITY COUNCIL MEETING PACKET FOR THE MEETING TO BE HELD ON SEPTEMBER 20, 2021

REGULAR SESSION CITY COUNCIL MEETING PACKET FOR THE MEETING TO BE HELD ON SEPTEMBER 20, 2021

Introduction

The City of Jersey Village (the "City") incorporated in 1956, and is located in northwest Harris County. The current population of the city is 7,935. The City is approximately 90% built out. The City has experienced several devastating flood events since 1998. One of the areas that has experienced repetitive flood events is the area of Jersey Drive from Equador Street to Lakeview Drive.

In 2017 the City adopted a Long-Term Flood Recovery Plan. This plan looked at numerous ways the City could work to reduce the damage of future flood events. The City is currently undertaking several activities to reduce future flooding, including home elevations from FEMA Funding.

FEMA grants are a very competitive grant. If the grant application is awarded it can still take a year or more for the money to arrive with the city for the work to be done. There are currently over 130 homes the City is working to remove from the flood plain. FEMA Grants for elevations are preferable to buyouts, as a buyout requires the land to be green space in perpetuity.

Given the length of time it will be for home elevation grants to reach all homes, the home owners of Jersey Drive have submitted a petition to the City requesting a TIRZ to be created to assist with flood mitigation, namely buyouts, on their street. The TIRZ would help to facilitate the sale of property from the current owners, so the homes could be demolished, and new homes could be built on the lots that would be above the flood plain. This would bring about flood mitigation for property owners more quickly that working with federal funding. It would also allow for the property to continue to provide great homes for future generations of families in Jersey Village.

Map 1: Location of Proposed Tax Increment Reinvestment Zone

The proposed boundaries of the TIRZ are depicted below.



Benefits of the District

The creation of this proposed TIRZ District allows the City of Jersey Village to benefit from homes being removed from the flood plain and new homes being constructed that are above the flood plain. In addition, this will also likely spur the redevelopment of nearby areas.

The City is proposing to capture 100% of the taxable real property incremental revenues being created within the TIRZ, during the lifetime of the District which is proposed for 20 years.

Preliminary Project Plan

This Preliminary Project Plan and Reinvestment Zone Financing Plan ("The Plan") has been prepared in accordance with the requirements of Chapter 311.011 of the Texas Tax Code and outlines the improvements to be funded and implemented by the proposed Tax Increment Reinvestment Zone Number 3, City of Jersey Village, Texas.

There are also several benefits to the city, other local taxing jurisdictions, and tax payers in general that will be accomplished with this TIRZ. One of those benefits is achieving some of the Comprehensive Plan Goals, which include:

- Invest in infrastructure, activities, and opportunities that will revitalize the highway 290 corridor to maximize its visual appeal, sense of place, and economic value.
- Promote infill and redevelopment of vacant or underutilized parcels.
- Ensure there are provisions for meeting and satisfying the needs of resident and potential residents with a variety of single family homes.
- Continue efforts to implement the Long-Term Flood Recovery Plan and mitigate future flooding in the city.

Other benefits for the City include:

- Enhances the City's tax base.
- Provides tool to partner with private developers to construct improvements.

REGULAR SESSION CITY COUNCIL MEETING PACKET FOR THE MEETING TO BE HELD ON SEPTEMBER 20, 2021

Existing Uses and Conditions

The table below, based on information from the Comp Plan, details the existing land uses and the percentages of their respective areas within the City.

Figure 1: Current Land Uses

Land Use	City Limits		ETJ	
	Acres	Percent	Acres	Percent
Single Family	683	30.2%	15	2.1%
Multi-Family	88	3.9%	0	0.0%
Townhome	21	0.9%	0	0.0%
Manufactured	-	0.0%	25	3.6%
Total Residential	792	35.0%	40	5.7%
Parks and Open Space	83	3.7%	0	0.0%
Public/Semi-Public	180	8.0%	11	1.6%
Private Recreation	134	5.9%	0	0.0%
Retail	44	1.9%	2	0.3%
Office	28	1.2%	0	0.0%
Commercial	182	8.1%	198	28.1%
Industrial	74	3.3%	302	42.9%
Detention Pond/Lake	98	4.3%	5	0.7%
Right-of-Way	446	19.8%	28	4.0%
Railroad Right-of-Way	27	1.2%	0	0.0%
Nonresidential	1,296	57.4%	546	77.6%
Vacant	170.00	7.5%	118	16.8%
Total Acres	2,258		704	

On the following pages are maps that show the existing uses and land conditions of the proposed TIRZ area, along with the current zoning of the area.

REGULAR SESSION CITY COUNCIL MEETING PACKET FOR THE MEETING TO BE HELD ON SEPTEMBER 20, 2021

Map 2: Existing Uses and conditions of land within and around the TIRZ.



Map 3: The existing land use zoning within the TIRZ.

REGULAR SESSION CITY COUNCIL MEETING PACKET FOR THE MEETING TO BE HELD ON SEPTEMBER 20, 2021

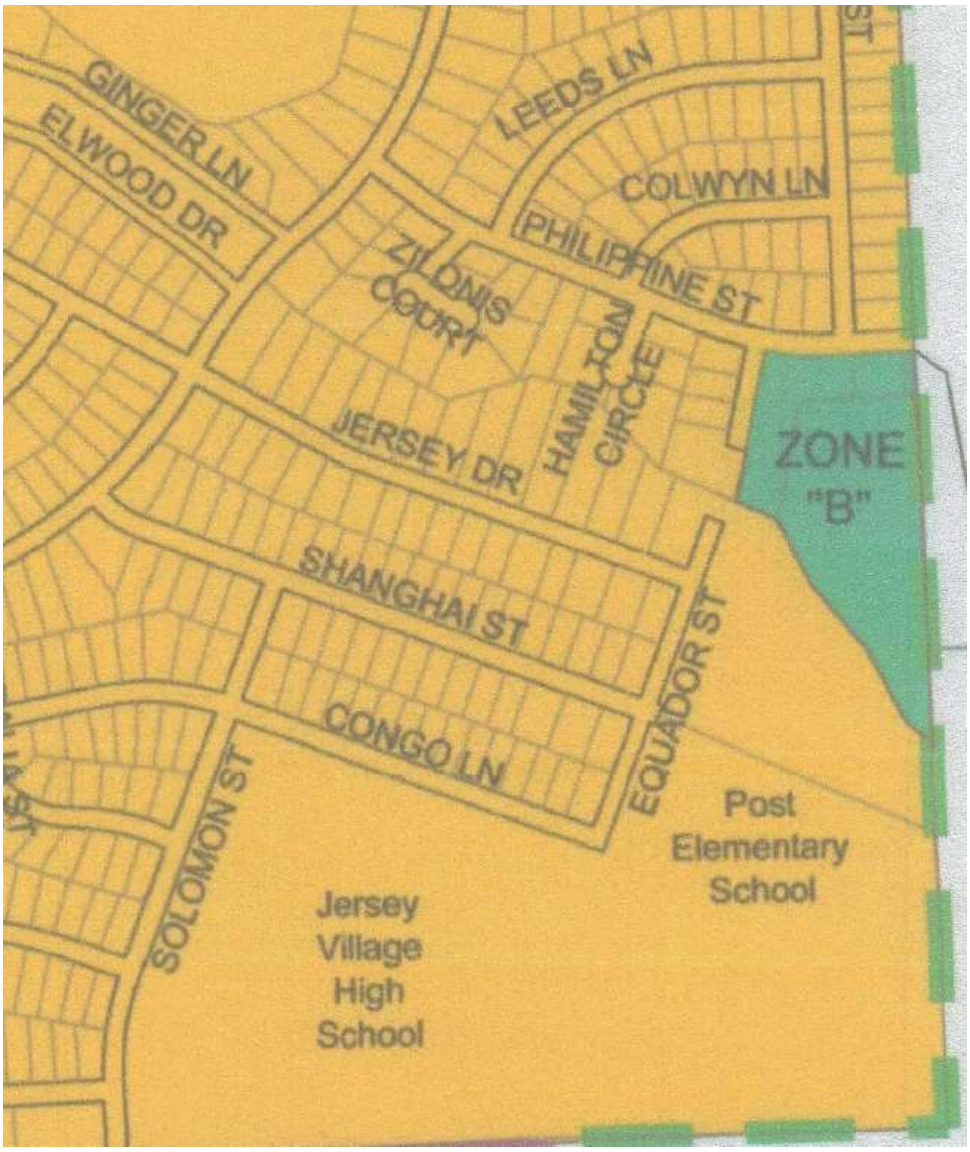
GINGER LN
ELWOOD DR
LEEDS LN
COLWYN LN
PHILIPPINE ST
ZILDNIS COURT
HAMILTON CIRCLE
JERSEY DR
ZONE "B"
SHANGHAI ST
CONGO LN
EQUADOR ST
SOLOMON ST
Post Elementary School
Jersey Village High School
Zone "A" - Single Family Dwelling District
Zone "B" - Single Family & Patio Home District

Ordinance Changes

There are no contemplated changes to the City's Code of Ordinances or Comprehensive Plan.

Non-Project Costs

Non-Project Costs will consist of unreimbursed costs of public rights-of way, utility upgrades, and other private investment. The projects which are expected to result from the TIRZ include new home constructions in the area. The total value of such projects can reasonably be projected to total more than $6 million at TIRZ end.

Method of Relocation

Relocation of utilities or roadways is not anticipated in this TIRZ. However, if relocation becomes necessary and in instances where appropriate, costs associated with such relocation may, on a case-by-case basis, be considered as eligible project costs, as determined by the Board of Directors of the TIRZ. In addition, the TIRZ Board and City will consider and utilize such other methods as are available, cost effective, and efficient to aid in the relocation with due weight being given to the availability of tax increments to pay related costs.

Preliminary Financing Plan

Financial Plan Narrative

The City views its participation in this TIRZ as a necessary flood mitigation effort. The cost of the redevelopment within the proposed Zone will be a public private partnership. Such partnerships have been successful for several other projects in Jersey Village and around the state. The TIRZ is intended to provide a mechanism for the purchase and sale of property and land to achieve the goal of removing homes from the flood plain and redevelopment of the property with new homes being constructed above the flood plain.

The TIRZ will likely not be self-sufficient at the onset and will require some financial contribution from the city general fund to facilitate the initial purchase and remediation of property. Any proceeds from the sale of any property would go into the TIRZ Fund.

However, it is anticipated that after some homes are redeveloped with assistance from the TIRZ, the market may prove these redevelopments to be successful without TIRZ assistance.

Estimated Project Costs

The City of Jersey Village is proposing the following preliminary Financial Plan, which is presented below. The dollar amounts are approximate estimates based upon assumptions that can be made of how many properties it is anticipated the TIRZ may purchase and resell. Purchases prices would be determined on a case by case basis with each individual property owner. At this time there is an estimated 31 properties that might be purchased.

Proposed Budget	Amount	Category	Authorized By Tax Code
Property Acquisition	$9,300,000	Capital Costs	311.002(1)(A)
Demolition of existing buildings	$775,000	Capital Costs	311.002(1)(A)
Administration Costs	$93,000	Professional Services	311.002(1)(D)
Total	$10,168,000		

REGULAR SESSION CITY COUNCIL MEETING PACKET FOR THE MEETING TO BE HELD ON SEPTEMBER 20, 2021

Administration costs are anticipated to be costs for an outside company to handle the Increased Cost of Compliance paperwork. By using Increased Cost of Compliance funding through Flood Insurance the demolition costs associated with the properties could be covered.

The project costs should be adjusted to actual acquisition and demolition costs when the projects occur.

A potential break down by year for the project costs is as follows:

TIRZ Year	Year	Acquisition of Property	Demolition of Existing Buildings	Professional Services	Number of Properties
1	2021	$ 1,200,000	$ 100,000	$12,000	4
2	2022	$ 1,200,000	$ 100,000	$12,000	4
3	2023	$ 1,200,000	$ 100,000	$12,000	4
4	2024	$ 1,200,000	$ 100,000	$12,000	4
5	2025	$ 1,200,000	$ 100,000	$12,000	4
6	2026	$ 1,200,000	$ 100,000	$12,000	4
7	2027	$ 1,200,000	$ 100,000	$12,000	4
8	2028	$ 900 ,000	$ 75,000	$9,000	3
Totals		$ 9,300,000	$ 775,000	$ 93,000	31

In addition to the projects described above projects that are eligible pursuant to the Texas Tax Code shall also be considered eligible project costs. The TIRZ will fund project costs at the discretion and approval of the Board of Directors of the TIRZ.

Kind, Number and Location of Proposed Public Improvements

There are no public improvements that are anticipated at this time.

Economic Feasibility

Currently the estimated project costs for the TIRZ are $10,168,000. The City is proposing to use 100% of the incremental increase of the Tax Rate for the entire 20 year life of the TIRZ.

As shown in the section below entitled “Methods and Sources of Financing” the revenues listed thee would match the estimated project costs.

It is anticipated that after some homes are redeveloped with assistance from the TIRZ, the market may prove these redevelopments to be successful without TIRZ assistance.

Estimate of Bonded Indebtedness To Be Incurred

While it is not anticipated to be necessary, bonds, notes or other obligations may be issued to yield net

REGULAR SESSION CITY COUNCIL MEETING PACKET FOR THE MEETING TO BE HELD ON SEPTEMBER 20, 2021

proceeds sufficient to pay all or a portion of the eligible project costs and related professional fees that are currently estimated at, but are not limited to, $6,190,000. The City, at its sole discretion, may issue or cause to be issued bonds, notes, or other obligations, including but not limited to revolving loan funds from the state, secured by tax increment revenues, the proceeds of which could be used to pay for or reimburse Project Costs, including public improvements, capitalized interest, professional fees, developer interest and costs of issuance of the bonds.

Estimated Time When Monetary Obligations Are To Be Incurred

Bond issuances or other obligations, if necessary, will occur at appropriate times as determined by the City and the City's Financial Advisor. Project Costs, administrative costs, and costs related to the creation and organization of the TIRZ may be paid from the issuance of bonds or directly from tax increment revenue.

Methods and Sources of Financing

One source of revenue for the TIRZ will be ad valorem property taxes generated on the annual incremental value above the base year value. The City of Jersey Village will participate at 100% of the increment for the duration of the TIRZ.

A second source of funding for the TIRZ would be from the sale of land. After property is acquired and existing homes removed the lots would be sold for development. The proceeds of these sales, estimated to be $2,270,000, would go into the TIRZ.

A third source of funding for the TIRZ would come from utilizing the Increased Cost of Compliance funding that is available through the National Flood Insurance Program. It is estimated this would be $775,000 and would cover the demolition costs of the district.

The other source of funding for the TIRZ would be appropriations from the General Fund. Based upon estimated costs and other revenues, the Zone would require appropriations totaling $6,228,374. However, it is anticipated that after some homes are redeveloped with assistance from the TIRZ, the market may prove these redevelopments to be successful without TIRZ assistance. This would mean less funding is required from the General Fund.

To ensure timely completion of the projects, both pay-as-you-go and various methods of financing may be utilized. These include:

- Bonds or Notes. Tax-exempt tax bonds or notes, which could use the increment generated, may be issued to fund improvements.
- Other Public Funds. To the extent permitted by any applicable program the City may utilize loan proceeds from state revolving loan funds such as, but not limited to, the Flood Infrastructure Fund, Clean Water State Revolving Loan Fund, and the Texas Water Development Fund.
- Direct Reimbursements. Projects that are closely related to particular private development projects or public infrastructure programs of public agencies, municipalities, and authorities may be financed through reimbursement agreements with a developer, public agency, municipality, or authority using a direct payment annually from the TIRZ increment fund.

REGULAR SESSION CITY COUNCIL MEETING PACKET FOR THE MEETING TO BE HELD ON SEPTEMBER 20, 2021

- Other private financing. Some projects may be financed on a short-term basis through private financial institutions.
- Grants/Other Public Funds. To the extent permitted by law, efforts will be made to leverage TIRZ funds with other public funds and economic development tools.

Duration of Zone

It is being proposed that the Zone be established for a period of 20 years. As such, the final year of tax increment revenues being captured would be in 2041. Therefore, the zone would terminate on December 31, 2041.

Current Appraised Value of Taxable Real Property

Based on the 2020 Harris County Appraisal District certified tax roll, the base year value of the TIRZ is $7,325,124.

Estimated Captured Appraised Value By Year

The tables on the following page shows the Captured Appraised Value and the resulting revenue from the City.

To come up with these numbers it was assumed that 4 homes would be torn down each year starting in year one, with a building assessed value of $131,000 which is the average value in the Zone. This goes for years 1-7. In year 8 it was assumed 3 homes, as this plan assumes 31 total homes being acquired.

Starting in year two we assumed 4 new homes existing at an average improvement value of $400,000. This goes for years 2-8. In year 9 it was assumed 3 homes, as this plan assumes 31 total homes being acquired.

The Exemption rate is assumed to be 23% of the total property value. This assumes an increase of the homestead exemption rate to 20%, and also factors in 3% for the Over 65 and other exemptions that some homeowners may have. This is based upon the existing exemptions as per the 2020 Certified Values.

This plan also assumes a 1% appreciation rate each year for the properties.

As is shown the first year the Zone would not generate revenue, due to 4 homes no longer being there and new homes not yet built which means they are not yet taxable.

REGULAR SESSION CITY COUNCIL MEETING PACKET FOR THE MEETING TO BE HELD ON SEPTEMBER 20, 2021

Jersey Village TIRZ #3

TIRZ Base Year	Assessed Value	Taxes Collected
2020	$7,325,124	$ 41,999

TIRZ Year	Year	Projected Annual Assessed Value	Estimated New Value Addded/(Lost)	Gross New Taxes Collected
1	2021	$ 6,874,375	$ (524,000)	$ -
2	2022	$ 8,019,119	$ 1,076,000	$ 2,673
3	2023	$ 9,175,310	$ 1,076,000	$ 9,114
4	2024	$ 10,343,063	$ 1,076,000	$ 15,619
5	2025	$ 11,522,494	$ 1,076,000	$ 22,189
6	2026	$ 12,713,719	$ 1,076,000	$ 28,825
7	2027	$ 13,916,856	$ 1,076,000	$ 35,527
8	2028	$ 15,132,025	$ 1,076,000	$ 42,297
9	2029	$ 16,490,345	$ 1,207,000	$ 49,864
10	2030	$ 17,855,248	$ 1,200,000	$ 57,467
11	2031	$ 18,033,801		$ 58,462
12	2032	$ 18,214,139		$ 59,466
13	2033	$ 18,396,280		$ 60,481
14	2034	$ 18,580,243		$ 61,506
15	2035	$ 18,766,045		$ 62,541
16	2036	$ 18,953,706		$ 63,586
17	2037	$ 19,143,243		$ 64,642
18	2038	$ 19,334,675		$ 65,708
19	2039	$ 19,528,022		$ 66,786
20	2040	$ 19,723,302		$ 67,873

Total Taxes Collected For TIRZ	$ 894,626

Assumptions	
Tax Rate (per hundred)	0.723466
Exemption Rate	23%
Annual Appreciation of District	1%

CITY COUNCIL - CITY OF JERSEY VILLAGE, TEXAS - AGENDA REQUEST

AGENDA DATE: September 20, 2021 **AGENDA ITEM**: G6

AGENDA SUBJECT: Consider Resolution 2021-58, authorizing the City Manager to enter into a contract with Total Energy Solutions Co. LLC for the purchase and installation of generators at the Police Department, Fire Department and Village Drive Water Treatment Plant.

Department/Prepared By: Austin Bleess, City Manager **Date Submitted**: September 8, 2021

EXHIBITS: Resolution No. 2021-58 - Authorizing FEMA HMGP Application
EXA – Total Energy Solutions Generator Contract

BUDGETARY IMPACT:

Required Expenditure:	$260,209.52
Amount Budgeted:	$284,000.
Appropriation Required:	$0

BACKGROUND INFORMATION:
Part of our long-term Capital Improvement Plan has been to install a generator at the Village Drive Water Treatment Plant, and to replace the generators at the Police and Fire Departments.

Back in June of 2020 the City Council authorized a grant application to FEMA as part of their Hazard Mitigation Grant Program (HMGP) to request funding for generators at the Police station, Fire Station, and Village Drive Water Plant.

On June 9, 2021 the City was notified that the grant application was funded. The grant was funded at $213,000, with a local cost share of $71,000, for a total project cost of $284,000. The grant will fund new natural gas generators at the Police and Fire Station as Natural Gas is easily accessible there. The Water Treatment Plant will be a diesel Generator. All of the generators will have the automatic transfer switch, NEMA rated enclosures, and include all installation and commission costs.

We went out to bids for these three generators and we opened bids on August 24, 2021. Each bid was scored against a sect of criteria as follows:

1. Proposals and specific local experience of the team, including the proposed project manager and key project staff to complete work specified in Scope of Work: **15 POINTS**
2. Firm's understanding of the Project: **10 POINTS**
3. Firm's Work Plan to complete the Project: **15 POINTS**
4. Firm's capacity to perform and deliver the Project in a timely manner: **20 POINTS**
5. Fee Proposal: **40 Points**

The results of the scoring follow:

Total Score	GenSolutions	Total Energy Solutions
Qualifications	10	60
Understanding of Project	25	30
Work Plan	15	40
Capacity to Perform	25	80
Fee Proposal	160	153
Total Score	235	363

REGULAR SESSION CITY COUNCIL MEETING PACKET FOR THE MEETING TO BE HELD ON SEPTEMBER 20, 2021

Based upon the results of the scoring staff is recommend the City Council award to the bid to Total Energy Solutions at a price of $260,209.52.

RECOMMENDED ACTION: To approve Resolution 2021-58, authorizing the City Manager to enter into a contract with Total Energy Solutions for the purchase and installation of generators at the Police Department, Fire Department and Village Drive Water Treatment Plant.

MOTION: To approve Resolution 2021-58, authorizing the City Manager to enter into a contract with Total Energy Solutions for the purchase and installation of generators at the Police Department, Fire Department and Village Drive Water Treatment Plant.

REGULAR SESSION CITY COUNCIL MEETING PACKET FOR THE MEETING TO BE HELD ON SEPTEMBER 20, 2021

RESOLUTION NO. 2021-58

A RESOLUTION OF THE CITY COUNCIL OF THE CITY OF JERSEY VILLAGE, TEXAS, AUTHORIZING THE CITY MANAGER TO ENTER INTO A CONTRACT WITH TOTAL ENERGY SOLUTIONS FOR THE PURCHASE AND INSTALLATION OF GENERATORS AT THE POLICE DEPARTMENT, FIRE DEPARTMENT AND VILLAGE DRIVE WATER TREATMENT PLANT

WHEREAS, the City of Jersey Village ("City") has gone out for competitive proposals for generators at the Police Station, Fire Station, and Village Drive Water Plant, in accordance with all applicable federal, state, and city procurement standards; and

WHEREAS, the procurement was publicly available from July 28, 2021 to August 24, 2021; and

WHEREAS, it is determined further solicitation is unlikely to yield more qualified and competitive bids without significant cost and delay for the City; and

WHEREAS, City Staff has ranked the proposals received and finds Total Energy Solutions to have the most advantageous proposal with price and other factors considered; and

WHEREAS, the City has been awarded a grant in the amount of $213,000 from the Federal Emergency Management Agency (FEMA) through the Texas Division of Emergency Management (TDEM) DR-4466-0002 for this project;

NOW TEHREFORE BE IT RESOLVED BY THE CITY COUNCIL OF THE CITY OF JERSEY VILLAGE, TEXAS, THAT:

Section 1. The contract for the purchase and installation of generators at the Police Department, Fire Department, and Village Drive Water Plant shall be awarded to the responsive, qualified bidder, Total Energy Solutions.

Section 2. The City Manager is authorized to execute on behalf of the City of Jersey Village all necessary contract documents with Total Energy Solutions Co LLC substantially in the form as presented here in Exhibit A.

PASSED AND APPROVED this 20th day of **September**, A.D., **2021**.

_____
Bobby Warren, Mayor

ATTEST:

_____
Lorri Coody, City Secretary

CITY OF JERSEY VILLAGE TEXAS A TEXAS STAR COMMUNITY

REGULAR SESSION CITY COUNCIL MEETING PACKET FOR THE MEETING TO BE HELD ON SEPTEMBER 20, 2021

Exhibit A

Total Energy Solutions Co. LLC

Generator Contract

REGULAR SESSION CITY COUNCIL MEETING PACKET FOR THE MEETING TO BE HELD ON SEPTEMBER 20, 2021

REGULAR SESSION CITY COUNCIL MEETING PACKET FOR THE MEETING TO BE HELD ON SEPTEMBER 20, 2021

GENERAL SERVICES CONTRACT

This General Services Contract (the "Contract") is made by and between the City of Jersey Village, a State of Texas home rule municipal corporation (the "City"), and Total Energy Solutions Co LLC (the "Contractor") (with each being a "Party", and together, the "Parties"), and shall be in full force and effect on the date of execution by the authorized representatives of the Parties below (the "Effective Date").

SECTION 1. Summary of the Services.

Description of Services:
Purchase and installation of generators at the Police Department, Fire Department, and Village Drive Water Treatment Plant. The total contract price for this work is $260,209.52.

Annual/Base Services:
None.

Work in addition to Base Services:

None.

Effective Date: October 1, 2021

Termination Date: March 30, 2022

SECTION 2. Services and Payment.
Contractor will furnish the Services to the City in accordance with the terms and conditions specified in this Contract. The Contractor will bill the City for the Services provided at intervals of at least thirty (30) days, except for the final billing. The City shall pay the Contractor for the Services in accordance with the terms of this Contract, but all payments to be made by the City to Contractor, including the time of payment and the payment of interest on overdue amounts, are subject to the applicable provisions of Chapter 2251 of the Government Code.

SECTION 3. Termination for Convenience.
The City may terminate this Contract during at any time for the City's own convenience, where the Contractor is not in default, by giving written notice to Contractor. If the City terminated this Contract under this paragraph, then the City will pay the Contractor for the portion of the Services rendered in accordance with this Contract up to the date of termination.

SECTION 4. Termination for Default.
Either Party may terminate this Contract as provided in this paragraph if the other Party is in default to any term of this Contract. The Party alleging the default will give the other Party notice of the default in writing citing the terms of the Contract that have been breached and what action the defaulting Party must take to cure the default. If the Party in default fails to cure the default as

specified in the notice within thirty (30) days, then the Party giving the notice of the default may terminate this Contract by written notice to the other Party, specifying the date of termination. Termination of the Contract under this paragraph does not affect the right of either Party to seek remedies for breach of the Contract as allowed by law, including any damages or costs suffered by either Party.

SECTION 5. Multi-Year Contracts and Funding.
If this Contract extends beyond the City's fiscal year in which it becomes effective, or provides for the City to make any payment during any of the City's fiscal years following the City's fiscal year in which this Contract becomes effective, and the City fails to appropriate funds to make any required Contract payment for that successive fiscal year, and there are no funds from the City's sale of debt instruments to make the required payment, then this Contract automatically terminates at the beginning of the first (1st) day of the City's successive fiscal year of the Contract for which the City has not appropriated funds or otherwise provided for funds to make a required payment under this Contract.

SECTION 6. Liability and Indemnity.
TO THE EXTENT ALLOWED BY LAW, ANY PROVISION OF ANY ATTACHED DOCUMENT THAT IS MADE A PART OF THIS CONTRACT THAT LIMITS THE CONTRACTOR'S LIABILITY TO THE CITY OR RELEASES THE CONTRACTOR FROM LIABILITY TO THE CITY FOR ACTUAL OR COMPENSATORY DAMAGES, LOSS, OR COSTS ARISING FROM THE PERFORMANCE OF THIS CONTRACT, OR THAT PROVIDES FOR CONTRACTUAL INDEMNITY OF EITHER PARTY, IS NOT APPLICABLE OR EFFECTIVE UNDER THIS CONTRACT. EXCEPT WHERE ANY ATTACHED DOCUMENT THAT IS MADE A PART OF THIS CONTRACT PROVIDED BY THE CITY PROVIDES OTHERWISE, EACH PARTY IS RESPONSIBLE FOR DEFENDING AGAINST, AND LIABLE FOR, PAYING ANY CLAIM, SUIT, OR JUDGMENT FOR DAMAGES, LOSS, OR COSTS ARISING FROM THAT PARTY'S NEGLIGENT ACTS OR OMISSIONS IN THE PERFORMANCE OF THIS CONTRACT IN ACCORDANCE WITH APPLICABLE LAW. THIS PROVISION DOES NOT AFFECT THE RIGHT OF EITHER PARTY WHO IS SUED BY A THIRD PARTY OF ACTS OR OMISSIONS ARISING FROM THIS CONTRACT TO BRING IN THE OTHER PARTY AS A THIRD-PARTY DEFENDANT AS ALLOWED BY LAW.

SECTION 7. Assignment.
The Contractor shall not assign this Contract without the prior written consent of the City.

SECTION 8. Law Governing and Venue.
This Contract is governed by the law of the State of Texas and a lawsuit may only be prosecuted on this Contract in a court of competent jurisdiction located in, or having jurisdiction in, Harris County, Texas.

SECTION 9. Entire Contract.
This Contract represents the entire Contract between the Parties and supersedes all prior negotiations, representations, or contracts, either written or oral. This Contract may be amended only by written instrument signed by the Parties.

SECTION 10. Independent Contractor.
The Contractor shall perform the work under this Contract as an independent contractor and not as an employee of the City. The City has no right to supervise, direct, or control the Contractor or the Contractor's officers or employees in the means, methods, or details of the Services The Parties

REGULAR SESSION CITY COUNCIL MEETING PACKET FOR THE MEETING TO BE HELD ON SEPTEMBER 20, 2021

agree that the work performed under this Contract is not inherently dangerous, that the Contractor will perform the work in a workmanlike manner, and that the Contractor will take proper care and precautions to insure the safety of the Contractor's officers and employees.

SECTION 11. Dispute Resolution Procedures.
The Parties desire an expeditious means to resolve any disputes that may arise between them regarding this Contract. If either Party disputes any matter relating to this Contract, then the Parties agree to try in good faith, before bringing any legal action, to settle the dispute by submitting the matter to mediation before a third party who will be selected by agreement of the Parties. The Parties will each pay one-half (½) of the mediator's fees.

SECTION 12. Attorney's Fees.
Should the City bring suit against the Contractor for breach of contract or for any other cause relating to this Contract, then the City shall be entitled to seek an award of attorney's fees or other costs relating to the suit.

SECTION 13. Severability.
If a court finds or rules that any part of this Contract is invalid or unlawful, then the remainder of this Contract continues to be binding on the Parties.

SECTION 14. Work Product.
Any work product generated as a result of this Contract shall be the property of the City.

SECTION 15. Compliance with SWMP.
The Contractor acknowledges that it is aware of the Storm Water Management Program (the "SWMP") developed by the City in compliance with the Texas Pollutant Discharge Elimination System General Permit No. TXR040000 (the "General Permit) issued by the Texas Commission on Environmental Quality. For all maintenance and construction activities, such as but not limited to, mowing, painting, general upkeep, and other maintenance-related activities on City-owned facilities which include buildings, amenities, parks, golf courses, detention ponds, and City-owned and operated public infrastructure such as water distribution, treatment, wastewater collection, and storm sewer systems, the Contractor will comply with all SWMP requirements. The Contractor agrees to comply with all applicable stormwater control measures, good housekeeping practices, and facility-specific stormwater management operating procedures described in Part II, Section B.5.(b)(2)-(6) of the General Permit, a copy of which is on file with the City. These procedures include: i) informing or training appropriate employees in implementing pollution prevention and good housekeeping practices; ii) waste disposal removed in accordance with 30 TAC Chapters 330 and 335; iii) identifying pollutants of concern that could be discharged from operation and maintenance activities and, if needed, developing and implementing pollution prevention measures to reduce these potential pollutants; iv) performing visual inspection of pollution prevention measures, as applicable; and, v) maintaining structural controls during the Contractor's work, as warranted.

SECTION 16. Disclosure of Interested Parties.
As required by Section 2252.908, Texas Government Code, if this Contract requires an action or vote by the City before the Contract may be signed, or has a value of at least one million dollars ($1,000,000), then the City may not enter into such Contract unless the Contractor submits a

REGULAR SESSION CITY COUNCIL MEETING PACKET FOR THE MEETING TO BE HELD ON SEPTEMBER 20, 2021

disclosure of interested parties to the City at the time the Contractor submits the signed Contract to the City. The Contractor agrees to submit such disclosure as required by Section 2252.908 of the Texas Government Code on the form 1295, prescribed by the Texas Ethics Commission, unless the Contractor is a publicly traded entity or a wholly owned subsidiary of same, in which case no disclosure is required. The Contractor agrees to access the Texas Ethics Commission website and complete the form 1295, receive a confirmation number and a PDF version of the completed form 1295, execute and notarize a hard copy version of the completed form 1295, and submit it, along with the confirmation number, to the City.

SECTION 17. No Boycott of Israel.
As required by Chapter 2270, Texas Government Code, the Contractor hereby verifies that it does not boycott Israel and will not boycott Israel through the term of this Contract. For purposes of this verification, "Boycott Israel" means refusing to deal with, terminating business activities with, or otherwise taking any action that is intended to penalize, inflict economic harm on, or limit commercial relations specifically with Israel, or with a person or entity doing business in Israel or in an Israeli controlled territory, but does not include an action made for ordinary business purposes. This Section 16 applies only to contracts with a value of one hundred thousand dollars ($100,000) or more that are to be paid wholly or partly from public funds of the City, between the City and any company with ten (10) or more full time employees. Furthermore, this Section 16 does not apply if the Contractor is a sole proprietorship

SECTION 18. No Business with Foreign Terrorist Organization.
Pursuant to Chapter 2252, Texas Government Code, the Contractor represents and certifies that, at the time of execution of this Contract, neither the Contractor, nor any wholly owned subsidiary, majority-owned subsidiary, parent company, or affiliate of the same: (i) engages in business with Iran, Sudan, or any foreign terrorist organization as described in Chapter 806 or 807 of the Texas Government Code, or Subchapter F of Chapter 2252 of the Texas Government Code; or, (ii) is a company listed by the Texas Comptroller of Public Accounts under Sections 806.051, 807.051, or 2252.153 of the Texas Government Code. The term "foreign terrorist organization" in this paragraph has the meaning assigned by Section 2252.151 of the Texas Government Code.

SECTION 19. Additional Contract Documents.
The following specified documents attached to this Contract are hereby made a part of this Contract. Any provision contained in any of the Contractor's Additional Contract Documents specified below that conflicts with this Contract or the General Services Contract Rider (the "Rider") is not applicable, and the terms of this Contract and the Rider shall govern.

A. Contractor's Additional Contract Documents:

- Proposal;
- Other: _____

B. City's Additional Contract Documents:

- General Services Contract Rider;
- **FEMA Required Contract Clauses**
- TDEM - Grant Terms and Conditions
- RFQ

REGULAR SESSION CITY COUNCIL MEETING PACKET FOR THE MEETING TO BE HELD ON SEPTEMBER 20, 2021

SIGNATURES

For: CITY	For: CONTRACTOR
_____	_____
Name [Signature]	**Name [Signature]**
Austin Bleess	_____
Name [Printed]	**Name [Printed]**
City Manager	September21, 2021	_____	_____
Title	**Date**	**Title**	**Date**

REGULAR SESSION CITY COUNCIL MEETING PACKET FOR THE MEETING TO BE HELD ON SEPTEMBER 20, 2021

CITY OF JERSEY VILLAGE – GENERAL SERVICES CONTRACT RIDER

SECTION 1. Application.

This General Services Contract Rider applies to, is a part of, and takes precedence over any conflicting provision in or attachment to the Contract (the "Contract") between the City of Jersey Village, Texas (the "City") and Total Energy Solutions Co LLC (the "Vendor") (with the City and the Vendor being the "Parties", and each a "Party"), which is attached and described as follows:

Purchase and installation of generators at the Police Department, Fire Department, and Village Drive Water Plant.

SECTION 2. Payment Provisions.

The City's payments under the Contract, including the time of payment and the payment of interest on overdue amounts, are subject to Chapter 2251, Texas Government Code.

SECTION 3. Multiyear Contracts.

If the City Council of the City (the "Council") does not appropriate funds to make any payment for a fiscal year after the City's fiscal year in which the Contract becomes effective, and there are no proceeds available for payment from the sale of bonds or other debt instruments, then the Contract automatically terminates at the beginning of the first (1st) day of the successive fiscal year. (Section 5, Article XI, Texas Constitution)

SECTION 4. Liability and Indemnity.

Any provision of the Contract is void and unenforceable if it: (i) limits or releases either party from liability that would exist by law in the absence of the provision; (ii) creates liability for either Party that would not exist by law in the absence of the provision; or, (iii) waives or limits either Party's rights, defenses, remedies, or immunities that would exist by law in the absence of the provision. (Section 5, Article XI, Texas Constitution)

SECTION 5. Confidentiality.

Any provision in the Contract that attempts to prevent the City's disclosure of information that is subject to public disclosure under Federal or Texas law, applicable regulation, or court or administrative decision or ruling, is invalid. (Chapter 552, Texas Government Code)

SECTION 6. Tax Exemption.

The City is not liable to the Vendor for any Federal, State, or local taxes for which the City is not liable by law, including State and local sales and use taxes (Section 151.309 and Title 3, Texas Tax Code) and Federal excise tax (Subtitle D of the Internal Revenue Code). Accordingly, those taxes may not be added to any item.

SECTION 7. Contractual Limitations Period.

Any limitations period in the Contract that does not run against the City by law or that is shorter

REGULAR SESSION CITY COUNCIL MEETING PACKET FOR THE MEETING TO BE HELD ON SEPTEMBER 20, 2021

than two (2) years is void. (Sections 16.061 and 16.070, Texas Civil Practice and Remedies Code)

SECTION 8. Governing Law and Venue.

Texas law governs the Contract and any lawsuit on the Contract must be filed in a court that has jurisdiction in Harris County, Texas.

SECTION 9. Special Conditions.

A. As required by Section 2252.908, Texas Government Code, if the Contract requires an action or vote by the Council before the Contract may be signed or has a value of at least one million dollars ($1,000,000), then the City may not enter into the Contract unless the Vendor submits a disclosure of interested parties to the City at the time the Vendor submits the signed Contract to the City. The Vendor agrees to submit such disclosure as required by Section 2252.908 of the Texas Government Code on the form 1295, prescribed by the Texas Ethics Commission, unless the Vendor is a publicly traded entity or a wholly owned subsidiary of same, in which case no disclosure is required.

B. As required by Chapter 2270, Texas Government Code, the Vendor hereby verifies that it does not boycott Israel and will not boycott Israel through the term of the Contract. For purposes of this verification, "Boycott Israel" means refusing to deal with, terminating business activities with, or otherwise taking any action that is intended to penalize, inflict economic harm on, or limit commercial relations specifically with Israel, or with a person or entity doing business in Israel or in an Israeli controlled territory, but does not include an action made for ordinary business purposes. This Section 9B applies only to contracts with a value of one hundred thousand dollars ($100,000) or more that are to be paid wholly or partly from public funds of the City, between the City and any company with ten (10) or more full time employees.

C. As required by Chapter 2252, Texas Government Code, the Vendor certifies that, at the time of execution of the Contract neither the Vendor, nor any wholly owned subsidiary, majority-owned subsidiary, parent company or affiliate of the same: (i) engages in business with Iran, Sudan, or any foreign terrorist organization as described in Chapter 806 or 807 of the Texas Government Code, or Subchapter F of Chapter 2252 of the Texas Government Code; or, (ii) is a company listed by the Texas Comptroller of Public Accounts under Sections 806.051, 807.051, or 2252.153 of the Texas Government Code. The term "foreign terrorist organization" in this paragraph has the meaning assigned to such term in Section 2252.151 of the Texas Government Code.

FOR THE CITY OF JERSEY VILLAGE:	**FOR THE VENDOR:**
_____	_____
Name [Signature]	**Name [Signature]**
Austin Bleess	_____
Name [Printed]	**Name [Printed]**
September 21, 2021	_____
Date	**Date**

REGULAR SESSION CITY COUNCIL MEETING PACKET FOR THE MEETING TO BE HELD ON SEPTEMBER 20, 2021

FEMA Required Contract Clauses

EQUAL EMPLOYMENTOPPORTUNITY

During the performance of this contract, the contractor agrees as follows:

(1) The contractor will not discriminate against any employee or applicant for employment because of race, color, religion, sex, sexual orientation, gender identity, or national origin. The contractor will take affirmative action to ensure that applicants are employed, and that employees are treated during employment without regard to their race, color, religion, sex, sexual orientation, gender identity, or national origin. Such action shall include, but not be limited to the following:

Employment, upgrading, demotion, or transfer; recruitment or recruitment advertising; layoff or termination; rates of pay or other forms of compensation; and selection for training, including apprenticeship. The contractor agrees to post in conspicuous places, available to employees and applicants for employment, notices to be provided setting forth the provisions of this nondiscrimination clause.

(2) The contractor will, in all solicitations or advertisements for employees placed by or on behalf of the contractor, state that all qualified applicants will receive consideration for employment without regard to race, color, religion, sex, sexual orientation, gender identity, or national origin.

(3) The contractor will not discharge or in any other manner discriminate against any employee or applicant for employment because such employee or applicant has inquired about, discussed, or disclosed the compensation of the employee or applicant or another employee or applicant. This provision shall not apply to instances in which an employee who has access to the compensation information of other employees or applicants as a part of such employee's essential job functions discloses the compensation of such other employees or applicants to individuals who do not otherwise have access to such information, unless such disclosure is in response to a formal complaint or charge, in furtherance of an investigation, proceeding, hearing, or action, including an investigation conducted by the employer, or is consistent with the contractor's legal duty to furnish information.

(4) The contractor will send to each labor union or representative of workers with which he has a collective bargaining agreement or other contract or understanding, a notice to be provided advising the said labor union or workers' representatives of the contractor's commitments under this section, and shall post copies of the notice in conspicuous places available to employees and applicants for employment.

(5) The contractor will comply with all provisions of Executive Order 11246 of September 24, 1965, and of the rules, regulations, and relevant orders of the Secretary of Labor.

(6) The contractor will furnish all information and reports required by Executive Order 11246 of September 24, 1965, and by rules, regulations, and orders of the Secretary of Labor, or pursuant thereto, and will permit access to his books, records, and accounts by the administering agency and the Secretary of Labor for purposes of investigation to ascertain compliance with such rules, regulations, and orders.

(7) In the event of the contractor's noncompliance with the nondiscrimination clauses of this contract or with any of the said rules, regulations, or orders, this contract may be canceled, terminated, or suspended in whole or in part and the contractor may be declared ineligible for further Government contracts or federally assisted construction contracts in accordance with

REGULAR SESSION CITY COUNCIL MEETING PACKET FOR THE MEETING TO BE HELD ON SEPTEMBER 20, 2021

procedures authorized in Executive Order 11246 of September 24, 1965, and such other sanctions may be imposed and remedies invoked as provided in Executive Order 11246 of September 24, 1965, or by rule, regulation, or order of the Secretary of Labor, or as otherwise provided by law.

(8) The contractor will include the portion of the sentence immediately preceding paragraph (1) and the provisions of paragraphs (1) through (8) in every subcontract or purchase order unless exempted by rules, regulations, or orders of the Secretary of Labor issued pursuant to section 204 of Executive Order 11246 of September 24, 1965, so that such provisions will be binding upon each subcontractor or vendor. The contractor will take such action with respect to any subcontract or purchase order as the administering agency may direct as a means of enforcing such provisions, including sanctions for noncompliance:

Provided, however, that in the event a contractor becomes involved in, or is threatened with, litigation with a subcontractor or vendor as a result of such direction by the administering agency, the contractor may request the United States to enter into such litigation to protect the interests of the United States.

The applicant further agrees that it will be bound by the above equal opportunity clause with respect to its own employment practices when it participates in federally assisted construction work: Provided, That if the applicant so participating is a State or local government, the above equal opportunity clause is not applicable to any agency, instrumentality or subdivision of such government which does not participate in work on or under the contract.

The applicant agrees that it will assist and cooperate actively with the administering agency and the Secretary of Labor in obtaining the compliance of contractors and subcontractors with the equal opportunity clause and the rules, regulations, and relevant orders of the Secretary of Labor, that it will furnish the administering agency and the Secretary of Labor such information as they may require for the supervision of such compliance, and that it will otherwise assist the administering agency in the discharge of the agency's primary responsibility for securing compliance.

The applicant further agrees that it will refrain from entering into any contract or contract modification subject to Executive Order 11246 of September 24, 1965, with a contractor debarred from, or who has not demonstrated eligibility for, Government contracts and federally assisted construction contracts pursuant to the Executive Order and will carry out such sanctions and penalties for violation of the equal opportunity clause as may be imposed upon contractors and subcontractors by the administering agency or the Secretary of Labor pursuant to Part II, Subpart D of the Executive Order. In addition, the applicant agrees that if it fails or refuses to comply with these undertakings, the administering agency may take any or all of the following actions: Cancel, terminate, or suspend in whole or in part this grant (contract, loan, insurance, guarantee); refrain from extending any further assistance to the applicant under the program with respect to which the failure or refund occurred until satisfactory assurance of future compliance has been received from such applicant; and refer the case to the Department of Justice for appropriate legal proceedings.

REGULAR SESSION CITY COUNCIL MEETING PACKET FOR THE MEETING TO BE HELD ON SEPTEMBER 20, 2021

Compliance with the Davis-Bacon Act.

(1) All transactions regarding this contract shall be done in compliance with the Davis-Bacon Act (40 U.S.C. 3141- 3144, and 3146-3148) and the requirements of 29C.F.R. pt. 5 as may be applicable. The contractor shall comply with 40 U.S.C. 3141-3144, and 3146-3148 and the requirements of 29 C.F.R. pt. 5 as applicable.
(2) Contractors are required to pay wages to laborers and mechanics at a rate not less than the prevailing wages specified in a wage determination made by the Secretary of Labor.
(3) Additionally, contractors are required to pay wages not less than once a week.

Compliance with the Copeland "Anti-Kickback" Act.

(1) **Contractor**. The contractor shall comply with 18 U.S.C. § 874, 40 U.S.C. § 3145, and the requirements of 29 C.F.R. pt. 3 as may be applicable, which are incorporated by reference into this contract.
(2) **Subcontracts**. The contractor or subcontractor shall insert in any subcontracts the clause above and such other clauses as FEMA may by appropriate instructions require, and also a clause requiring the subcontractors to include these clauses in any lower tier subcontracts. The prime contractor shall be responsible for the compliance by any subcontractor or lower tier subcontractor with all of these contract clauses.
(3) Breach. A breach of the contract clauses above may be grounds for termination of the contract, and for debarment as a contractor and subcontractor as provided in 29 C.F.R. § 5.12."

Compliance with the Contract Work Hours and Safety Standards Act.

(1) **Overtime requirements**. No contractor or subcontractor contracting for any part of the contract work which may require or involve the employment of laborers or mechanics shall require or permit any such laborer or mechanic in any workweek in which he or she is employed on such work to work in excess of forty hours in such workweek unless such laborer or mechanic receives compensation at a rate not less than one and one-half times the basic rate of pay for all hours worked in excess of forty hours in such workweek.
(2) Violation; liability for unpaid wages; liquidated damages. In the event of any violation of the clause set forth in paragraph (b)(1) of this section the contractor and any subcontractor responsible therefor shall be liable for the unpaid wages. In addition, such contractor and subcontractor shall be liable to the United States, for liquidated damages. Such liquidated damages shall be computed with respect to each individual laborer or mechanic, including watchmen and guards, employed in violation of the clause set forth in paragraph (b)(1) of this section, in the sum of $27 for each calendar day on which such individual was required or permitted to work in excess of the standard workweek of forty hours without payment of the overtime wages required by the clause set forth in paragraph (b)(1) of this section.
(3) Withholding for unpaid wages and liquidated damages. The City of Jersey Village shall upon its own action or upon written request of an authorized representative of the Department of Labor withhold or cause to be withheld, from any moneys payable on account of work performed by

the contractor or subcontractor under any such contract or any other Federal contract with the same prime contractor, or any other federally-assisted contract subject to the Contract Work Hours and Safety Standards Act, which is held by the same prime contractor, such sums as may be determined to be necessary to satisfy any liabilities of such contractor or subcontractor for unpaid wages and liquidated damages as provided in the clause set forth in paragraph (b)(2) of this section. (4) Subcontracts. The contractor or subcontractor shall insert in any subcontracts the clauses set forth in paragraph (b)(1) through (4) of this section and also a clause requiring the subcontractors to include these clauses in any lower tier subcontracts. The prime contractor shall be responsible for compliance by any subcontractor or lower tier subcontractor with the clauses set forth in paragraphs (b)(1) through (4) of this section

Clean Air Act

(1) The contractor agrees to comply with all applicable standards, orders or regulations issued pursuant to the Clean Air Act, as amended, 42 U.S.C. § 7401 et seq.
(2) The contractor agrees to report each violation to the City and understands and agrees that the City will, in turn, report each violation as required to assure notification to the Federal Emergency Management Agency, and the appropriate Environmental Protection Agency Regional Office.
(3) The contractor agrees to include these requirements in each subcontract exceeding $150,000 financed in whole or in part with Federal assistance provided by FEMA.

Federal Water Pollution Control Act

(1) The contractor agrees to comply with all applicable standards, orders, or regulations issued pursuant to the Federal Water Pollution Control Act, as amended, 33 U.S.C. 1251 et seq.
(2) The contractor agrees to report each violation to the (name of the applicant entering into the contract) and understands and agrees that the (name of the applicant entering into the contract) will, in turn, report each violation as required to assure notification to the Federal Emergency Management Agency, and the appropriate Environmental Protection Agency Regional Office.
(3) The contractor agrees to include these requirements in each subcontract exceeding $150,000 financed in whole or in part with Federal assistance provided by FEMA.

Suspension and Debarment

(1) This contract is a covered transaction for purposes of 2 C.F.R. pt. 180 and 2 C.F.R. pt. 3000. As such, the contractor is required to verify that none of the contractor's principals (defined at 2 C.F.R. § 180.995) or its affiliates (defined at 2 C.F.R. § 180.905) are excluded (defined at 2 C.F.R. § 180.940) or disqualified (defined at 2 C.F.R. § 180.935).
(2) The contractor must comply with 2 C.F.R. pt. 180, subpart C and2 C.F.R. pt. 3000, subpart C, and must include a requirement to comply with these regulations in any lower tier covered transaction it enters into.
(3) This certification is a material representation of fact relied upon by the City. If it is later determined that the contractor did not comply with 2 C.F.R. pt. 180, subpart C and 2 C.F.R. pt.

REGULAR SESSION CITY COUNCIL MEETING PACKET FOR THE MEETING TO BE HELD ON SEPTEMBER 20, 2021

3000, subpart C, in addition to remedies available to the City, the Federal Government may pursue available remedies, including but not limited to suspension and/or debarment.

(4) The bidder or proposer agrees to comply with the requirements of2 C.F.R. pt. 180, subpart C and 2 C.F.R. pt. 3000, subpart C while this offer is valid and throughout the period of any contract that may arise from this offer. The bidder or proposer further agrees to include a provision requiring such compliance in its lower tier covered transactions.

Byrd Anti-Lobbying Amendment, 31 U.S.C. § 1352 (as amended)

Contractors who apply or bid for an award of $100,000 or more shall file the required certification. Each tier certifies to the tier above that it will not and has not used Federal appropriated funds to pay any person or organization for influencing or attempting to influence an officer or employee of any agency, a Member of Congress, officer or employee of Congress, or an employee of a Member of Congress in connection with obtaining any Federal contract, grant, or any other award covered by 31 U.S.C. § 1352. Each tier shall also disclose any lobbying with non-Federal funds that takes place in connection with obtaining any Federal award. Such disclosures are forwarded from tier to tier up to the recipient who in turn will forward the certification(s) to the awarding agency.

Procurement of Recovered Materials

(1) In the performance of this contract, the Contractor shall make maximum use of products containing recovered materials that are EPA-designated items unless the product cannot be acquired
   - **a.** Competitively within a timeframe providing for compliance with the contract performance schedule;
   - **b.** Meeting contract performance requirements; or
   - **c.** At a reasonable price.

(2) Information about this requirement, along with the list of EPAdesignated items, is available at EPA's Comprehensive Procurement Guidelines web site, https://www.epa.gov/smm/comprehensiveprocurement-guideline-cpg-program.

(3) The Contractor also agrees to comply with all other applicable requirements of Section 6002 of the Solid Waste Disposal Act.

Access to Records

The following access to records requirements apply to this contract:

(1) The Contractor agrees to provide the Texas Division of Emergency Management, the City, the FEMA Administrator, the Comptroller General of the United States, or any of their authorized representatives access to any books, documents, papers, and records of the Contractor which are directly pertinent to this contract for the purposes of making audits, examinations, excerpts, and transcriptions.

(2) The Contractor agrees to permit any of the foregoing parties to reproduce by any means whatsoever or to copy excerpts and transcriptions as reasonably needed.

(3) The Contractor agrees to provide the FEMA Administrator or his authorized representatives access to construction or other work sites pertaining to the work being completed under the contract.

REGULAR SESSION CITY COUNCIL MEETING PACKET FOR THE MEETING TO BE HELD ON SEPTEMBER 20, 2021

(4) In compliance with the Disaster Recovery Act of 2018, the TDEM and the Contractor acknowledge and agree that no language in this contract is intended to prohibit audits or internal reviews by the FEMA Administrator or the Comptroller General of the United States.

DHS Seal, Logo, and Flags

The contractor shall not use the DHS seal(s), logos, crests, or reproductions of flags or likenesses of DHS agency officials without specific FEMA pre-approval.

COMPLIANCE WITH FEDERAL LAW, REGULATIONS, AND EXECUTIVEORDERS

This is an acknowledgement that FEMA financial assistance will be used to fund all or a portion of the contract. The contractor will comply with all applicable Federal law, regulations, executive orders, FEMA policies, procedures, and directives.

NO OBLIGATION BY FEDERAL GOVERNMENT

The Federal Government is not a party to this contract and is not subject to any obligations or liabilities to the non-Federal entity, contractor, or any other party pertaining to any matter resulting from the contract.

PROGRAM FRAUD AND FALSE OR FRAUDULENT STATEMENTS OR RELATEDACTS

The Contractor acknowledges that 31 U.S.C. Chap. 38 (Administrative Remedies for False Claims and Statements) applies to the Contractor's actions pertaining to this contract.

REGULAR SESSION CITY COUNCIL MEETING PACKET FOR THE MEETING TO BE HELD ON SEPTEMBER 20, 2021

GRANT TERMS AND CONDITIONS

This Grant Agreement (consisting of these terms and conditions and all exhibits) is made and entered into by and between the Texas Division of Emergency Management (TDEM), an agency of the State of Texas, hereinafter referred to as "TDEM," and the grant recipient, **CITY OF JERSEY VILLAGE**, hereinafter referred to as the "Subrecipient." Furthermore, TDEM and the Subrecipient are collectively hereinafter referred to as the "Parties." All subawards made under this grant agreement are subject to the same terms and conditions below.

Subrecipient may not assign or transfer any interest in this Grant without the express, prior written consent of TDEM and DHS/FEMA.

a. The term Recipient and pass-through entity have the same meaning as "Grantee," as used in governing statutes, regulations, and DHS/FEMA guidance.

b. A Recipient is also a "non-federal entity" for grants administration purposes.

c. A Subrecipient is also known as a "Subgrantee" as used in governing statutes regulations and DHS/ FEMA guidance.

d. A Subrecipient is also a "non-federal entity" for grants administration purposes.

e. The "Grant" referred to in this agreement is a subgrant to the Subrecipient passed thru from TDEM to the Subrecipient.

f. Certifying Official will be the Mayor, Judge, or Executive Director authorized to execute these grant terms and conditions, and to submit changes of Subrecipient Agents.

f. Projects and any subsequent versions for those projects accepted by the Subrecipient and subsequently obligated or deobligated by DHS/FEMA are considered subawards to this grant agreement.

A. **Standard of Performance**. Subrecipient shall perform all activities as approved by TDEM. Any change to a project shall receive prior written approval by TDEM and, if required, by FEMA. Subrecipient shall perform all activities in accordance with all terms, provisions and requirements set forth in this Grant, including but not limited to the following Exhibits:
   1. Assurances – Non-Construction Programs, hereinafter referred to as "Exhibit A"
   2. Assurances – Construction Programs, hereinafter referred to as "Exhibit B"
   3. Certifications for Grant Agreements, hereinafter referred to as "Exhibit C"
   4. State of Texas Assurances, hereinafter referred to as "Exhibit D"
   5. Environmental Review Certification, hereinafter referred to as "Exhibit E"
   6. Additional Grant Conditions, hereinafter referred to as "Exhibit F"
   7. Additional Grant Certifications, hereinafter referred to as "Exhibit G"
   8. Request for Information and Documentation referred to as "Exhibit H"

B. **Failure to Perform**. In the event Subrecipient fails to implement and complete the project(s) approved and awarded, or comply with any provision of this Grant, Subrecipient shall be liable to TDEM for an amount not to exceed the award amount of this Grant and may be barred from applying for or receiving additional DHS/FEMA grant program funds

REGULAR SESSION CITY COUNCIL MEETING PACKET FOR THE MEETING TO BE HELD ON SEPTEMBER 20, 2021

or any other grant program funds administered by TDEM until repayment to TDEM is made and any other compliance or audit finding is satisfactorily resolved, in addition to any other remedy specified in this Grant. Failure to timely implement and complete projects may reduce future funding in additional DHS/FEMA and/or other grant programs administered by TDEM.

C. **Funding Obligations**. TDEM shall not be liable to Subrecipient for any costs incurred by Subrecipient that are not allowable costs.
   1. Notwithstanding any other provision of this Grant, the total of all payments and other obligations incurred by TDEM under this Grant shall not exceed the total cumulative award amounts listed on the Subawards (projects and subsequent versions).
   2. Subrecipient shall contribute the match funds listed on the subaward.

   Subrecipient shall refund to TDEM any sum of these Grant funds that has been determined by TDEM or DHS/FEMA to be an overpayment to Subrecipient or that TDEM determines has not been spent by Subrecipient in accordance with this Grant. No refund payment(s) shall be made from local, state or federal Grant funds unless repayment with Grant funds is specifically permitted by statute or regulation. Subrecipient shall make such refund to TDEM within thirty (30) calendar days after TDEM requests such refund

D. **Performance Period**. The performance period for this Grant is listed on the subaward letter for each project. **All projects shall be completed within the performance period AND all reimbursement requests shall be submitted to TDEM within 60 days of the end of the performance period.** Subrecipient shall have expended all Grant funds and submitted reimbursement requests, invoices and any supporting documentation to TDEM within 60 days of the end of the performance period. TDEM shall not be obligated to reimburse expenses incurred after the performance period or submitted after the deadline.

E. **Uniform Administrative Requirements, Cost Principals and Audit Requirements**. Except as specifically modified by law or this Grant, Subrecipient shall administer this Grant through compliance with the most recent version of all applicable laws and regulations, including but not limited to DHS program legislation, Federal awarding agency regulations, and the terms and conditions of this Grant. A non-exclusive list is provided below [not all may apply in every projects]:
   - Public Law 93-288, as amended (Stafford Act)
   - 44 CFR, Emergency Management and Assistance
   - Disaster Mitigation Act of 2000
   - OMB Regulations 2 CFR, Grant and Agreements
   - Executive Order 11988, Floodplain Management
   - Executive Order 11990, Protection of Wetlands
   - Executive Order 12372, Intergovernmental Review of Programs and Activities
   - Executive Order 12549, Debarment and Suspension
   - Executive Order 12612, Federalism
   - Executive Order 12699, Seismic Design
   - Executive Order 12898, Environmental Justice
   - Coastal Barrier Resources Act, Public Law 97-348
   - Single Audit Act, Public Law 98-502
   - Sandy Recovery Improvement Act publications

REGULAR SESSION CITY COUNCIL MEETING PACKET FOR THE MEETING TO BE HELD ON SEPTEMBER 20, 2021

- 16 U.S.C. § 470, National Historic Preservation Act
- 16 U.S.C. § 1531, Endangered Species Act References
- FEMA program publications, guidance and policies

F. **State Requirements for Grants**. Subrecipient shall comply with all other federal, state, and local laws and regulations applicable to this Grant including but not limited to the laws and the regulations promulgated in Texas Government Code, Chapter 783, Uniform Grant and Contract Management, (UGMS) at:
http://www.window.state.tx.us/procurement/catrad/ugms.pdf
and the program State Administrative Plan, available at:
https://grants.tdem.texas.gov
Subrecipient shall, in addition to the assurances and certifications, comply and require each of its subcontractors employed in the completion of the project to comply with all applicable statutes, regulations, executive orders, OMB circulars, terms and conditions of this Grant and the approved application.

Grant funds may not be awarded to or expended by any entity which performs political polling. This prohibition does not apply to a poll conducted by an academic institution as part of the institution's academic mission that is not conducted for the benefit of a particular candidate or party.

Grant funds may not be expended by a unit of local government unless the following limitations and reporting requirements are satisfied:

1. Texas General Appropriations Act, Art. IX, Parts 2 and 3, except there is no requirement for increased salaries for local government employees;
2. Texas Government Code Sections 556.004, 556.005, and 556.006, which prohibits using any money or vehicle to support the candidacy of any person for office, influencing positively or negatively the payment, loan, or gift to a person or political organization for a political purpose, and using Grant funds to influence the passage or defeat of legislation including not assisting with the funding of a lobbyist, or using Grant funds to pay dues to an organization with a registered lobbyist;
3. Texas Government Code Sections 2113.012 and 2113.101, which prohibits using Grant funds to compensate any employee who uses alcoholic beverages on active duty and Subrecipient may not use Grant funds to purchase an alcoholic beverage and may not pay or reimburse any travel expense for an alcoholic beverage;
4. Texas General Appropriations Act, Art. IX, Section 6.13, which requires Subrecipient to make every effort to attain key performance target levels associated with this Grant, including performance milestones, milestone time frames, and related performance reporting requirements; and
5. General Appropriations Act, Art. IX, Sections 7.01 and 7.02, and Texas Government Code §2102.0091, which requires that this Grant may only be expended if Subrecipient timely completes and files its reports.

G. **Restrictions and General Conditions**.

1. Use of Funds. DHS/FEMA Grant funds may only be used for the purposes set forth in this Grant, and shall be consistent with the statutory authority for this Grant. Grant funds may not be used for matching funds for other Federal grants/cooperative agreements, lobbying, or intervention in Federal regulatory or adjudicatory proceedings. In addition,

REGULAR SESSION CITY COUNCIL MEETING PACKET FOR THE MEETING TO BE HELD ON SEPTEMBER 20, 2021

Federal funds may not be used to sue the Federal government or any other government entity.

2. Federal Employee Prohibition. Federal employees are prohibited directly benefiting from any funds under this Grant.
3. Points of Contacts. Within 10 calendar days of any change, Subrecipient shall notify TDEM of any change in designated of Subrecipient Agents as submitted during the execution of this agreement, and any subsequent changes submitted by Subrecipient. In the event a Subrecipient hires a consultant to assist them with managing its Public Assistance grants, they must be listed on the Designated Subrecipient Agent Form. TDEM will direct all correspondence to the Subrecipient but will cc: the consultant on all email exchanges. The Subrecipient will be responsible for sharing written communications with the consultant. The Subrecipient will remain the primary point of contact and must be included in all decision making activities.
4. DUNS Number. Subrecipient confirms its Data Universal Numbering Systems (DUNS) Number is accurate and is registered on Sams.gov. The DUNS Number is the nine digit number established and assigned by Dun and Bradstreet, Inc., at 866/705-5711 or http://fedgov.dnb.com/webform
5. Central Contractor Registration and Universal Identifier Requirements. Subrecipient maintains that it has registered on the System for Award Management (SAM) at www.sam.gov or other federally established site for contractor registration, and entered TDEM-required information. Subrecipient shall keep current, and then review and update the information at least annually. Subrecipient shall keep information current in the SAM database until the later of when it submits this Grant's final financial report or receives final Grant award payment. Subrecipient agrees that it shall not make any subaward agreement or contract related to this Grant without first obtaining the vendor/subawardee's mandatory DUNS number. See Section §200.32 of OMB 2 C.F.R.
6. Reporting Total Compensation of Subrecipient Executives. 2 C.F.R. §200.331; see FEMA Information Bulletin 350.
   a. Applicability and what to report: Subrecipient shall report whether Subrecipient received $25 million or more in Federal procurement contracts or financial assistance subject to the Transparency Act per 2 C.F.R. §200.331. Subrecipient shall report whether 80% or more of Subrecipient's annual gross revenues were from Federal procurement contracts or Federal financial assistance. If Subrecipient answers "yes" to both questions, Subrecipient shall report, along with Subrecipient's DUNS number, the names and total compensation (see 17 C.F.R. §229.402(c)(2)) for each of Subrecipient's five most highly compensated executives for the preceding completed fiscal year.
   b. Where and when to report: Subrecipient shall report executive total compensation at www.sam.gov or other federally established replacement site. By signing this Grant, Subrecipient certifies that, if required, Subrecipient's jurisdiction has already registered, entered the required information, and shall keep information in the SAM database current, and update the information at least annually for each year until the later of when the jurisdiction submits its final financial report or receives final payment. Subrecipient agrees that it shall not make any subaward agreement or contract without first obtaining the subawardee's mandatory DUNS number.
7. Debarment and Suspension. Subrecipient shall comply with Executive Order 12549 and 12689, which provide protection against waste, fraud, and abuse by debarring or

REGULAR SESSION CITY COUNCIL MEETING PACKET FOR THE MEETING TO BE HELD ON SEPTEMBER 20, 2021

suspending those persons deemed irresponsible in their dealings with the Federal government.

8. Direct Deposit. A completed direct deposit form from Subrecipient shall be provided to TDEM, prior to receiving any payments under the provisions of this grant. The direct deposit form is currently available at grants.tdem.texas.gov under Resources/Public Assistance.
9. Property Management and Inventory. Subrecipient shall maintain property/inventory records which, at minimum, shall include a description of the property, a serial number or other identification number, the source of property, who holds title, the acquisition date, the cost of the property, the percentage of Federal participation in the cost of the property, the location, use and condition of the property, and any ultimate disposition data including the date of disposal and sale price of the property Subrecipient shall develop and implement a control system to prevent loss, damage or theft of property and Subrecipient shall investigate and document any loss, damage or theft of property funded under this Grant.
10. Site Visits. DHS/FEMA and/or TDEM, through its authorized representatives, have the right at all reasonable times to make site visits to review project accomplishments and management control systems and to provide such technical assistance as may be required. If any site visit is made by DHS/FEMA on the premises of Subrecipient or a contractor under this Grant, Subrecipient shall provide and shall require its contractors to provide all reasonable facilities and assistance for the safety and convenience of the government representatives in the performance of their duties. All site visits and evaluations shall be performed in such a manner that will not unduly delay the work.

H. **Procurement and Contracting**.

1. Procurements. Subrecipient shall comply with all applicable federal, state, and local laws and requirements, including but not limited to proper competitive solicitation processes where required, for any procurement which utilizes federal funds awarded under this Grant in accordance with 2 C.F.R. 200. 318-326 and Appendix II to Part 200 (A-C) and (E-J)
2. Contract Provisions. All contracts executed using funds awarded under this Grant shall contain the contract provisions listed under 2 C.F.R. 200.326 and Appendix II (A), Uniform Administrative Requirements for Grants and Cooperative Agreements to State and Local Governments.
3. Procurement activities must follow the most restrictive of Federal, State and Local procurement regulations:
    a. Procurement by micro purchase
    b. Procurement by small purchase
    c. Procurement by sealed bid
    d. Procurement by competitive proposal
    e. Procurement by non-competitive proposal, solely when the award of a contract is unfeasible under the other methods

The State must be contacted for approval to use a noncompetitive procurement method. Failure to follow eligible procurement methods will result in ineligible costs. Other types of agreements for services must have State approval prior to use or execution. A copy of the local procurement policy must be provided to the State before initial payment.

REGULAR SESSION CITY COUNCIL MEETING PACKET FOR THE MEETING TO BE HELD ON SEPTEMBER 20, 2021

The **cost plus a percentage of cost** and **percentage of construction** cost methods of contracting **are ineligible**.

Must perform **cost/price analysis** for every procurement action in excess of the Simplified Acquisition Threshold.

Must negotiate profit as a separate element where required.

4. Evidence of non-debarment for vendors must be documented through http://www.sam.gov/portal/public/SAM and http://www.window.state.tx.us/procurement/prog/vendor_performance/debarred/ and submitted for review.
5. Comply with rules related to underutilized businesses (small and minority businesses, women's enterprises and labor surplus firms) at 2 CFR 200.321

I. **Monitoring.** Subrecipient will be monitored periodically by federal, state or local entities, both programmatically and financially, to ensure that project goals, objectives, performance requirements, timelines, milestone completion, budget, and other program-related criteria are met.

TDEM, or its authorized representative, reserves the right to perform periodic desk/office-based and/or on-site monitoring of Subrecipient's compliance with this Grant and of the adequacy and timeliness of Subrecipient's performance pursuant to this Grant. After each monitoring visit, if the monitoring visit reveals deficiencies in Subrecipient's performance under this Grant, a monitoring report will be provided to the Subrecipient and shall include requirements for the timely correction of such deficiencies by Subrecipient. Failure by Subrecipient to take action specified in the monitoring report may be cause for suspension or termination of this Grant pursuant to the Suspension and/or Termination Section herein.

J. **Audit**.

1. Audit of Federal and State Funds. Subrecipient shall arrange for the performance of an annual financial and compliance audit of funds received and performances rendered under this Grant as required by the Single Audit Act (OMB 2 C.F.R. 200.501, formerly A- 133). Subrecipient shall comply, as applicable, with Texas Government Code, Chapter 783, the Uniform Grant Management Standards (UGMS), the State Uniform Administrative Requirements for Grants and Cooperative Agreements.
2. Right to Audit. Subrecipient shall give the United States Department of Homeland Security (DHS), Federal Emergency Management Agency (FEMA), the Comptroller General of the United States, the Texas State Auditor, TDEM, or any of their duly authorized representatives, access to and the right to conduct a financial or compliance audit of Grant funds received and performances rendered under this Grant. Subrecipient shall permit TDEM or its authorized representative to audit Subrecipient's records. Subrecipient shall provide any documents, materials or information necessary to facilitate such audit.
3. Subrecipient's Liability for Disallowed Costs. Subrecipient understands and agrees that it shall be liable to TDEM for any costs disallowed pursuant to any financial or compliance audit(s) of these funds. Subrecipient further understands and agrees that reimbursement to TDEM of such disallowed costs shall be paid by Subrecipient

REGULAR SESSION CITY COUNCIL MEETING PACKET FOR THE MEETING TO BE HELD ON SEPTEMBER 20, 2021

from funds that were not provided or otherwise made available to Subrecipient pursuant to this Grant or any other federal contract.

4. Subrecipient's Facilitation of Audit. Subrecipient shall take such action to facilitate the performance of such audit(s) conducted pursuant to this Section as TDEM may require of Subrecipient. Subrecipient shall ensure that this clause concerning the authority to audit funds received indirectly by subcontractors through Subrecipient and the requirement to cooperate is included in any subcontract it awards.
5. State Auditor's Clause. Subrecipient understands that acceptance of funds under this Grant acts as acceptance of the authority of the State Auditor's Office to conduct an audit or investigation in connection with those funds. Subrecipient further agrees to cooperate fully with the State Auditor's Office in the conduct of the audit or investigation, including providing all records requested. Subrecipient shall ensure that this clause concerning the State Auditor's Office's authority to audit funds and the requirement to cooperate fully with the State Auditor's Office is included in any subgrants or subcontracts it awards. Additionally, the State Auditor's Office shall at any time have access to and the rights to examine, audit, excerpt, and transcribe any pertinent books, documents, working papers, and records of Subrecipient relating to this Grant.

K. **Retention and Accessibility of Records**.

1. Retention of Records. Subrecipient shall follow its own internal retentaion policy, or the state's retention policy, whichever is stricter. At a minimum, the subrecipient shall maintain fiscal records and supporting documentation for all expenditures of this Grant's funds pursuant to the applicable OMB 2 C.F.R. Subpart D – Post Federal Award Requirements, §200.333-337, and this Grant. Subrecipient shall retain these records and any supporting documentation for a minimum of three (3) years from the later of the completion of this project's public objective, submission of the final expenditure report, any litigation, dispute, or audit. Records shall be retained for three (3) years after any real estate or equipment final disposition. The DHS or TDEM may direct Subrecipient to retain documents or to transfer certain records to DHS/FEMA custody when DHS/FEMA determines that the records possess long term retention value.
2. Access to Records. Subrecipient shall give the United States Department of Homeland Security, the Comptroller General of the United States, the Texas State Auditor, TDEM, or any of its duly authorized representatives, access to and the right to examine all books, accounts, records, reports, files, other papers, things or property belonging to or in use by Subrecipient pertaining to this Grant including records concerning the past use of DHS/FEMA funds. Such rights to access shall continue as long as the records are retained by Subrecipient.

L. Changes, Amendments, Suspension or Termination

1. Modification. DHS/FEMA or TDEM may modify this Grant after an award has been made. Once notification has been made in writing, any subsequent request for funds indicates Subrecipient's acceptance of the changes to this Grant. Any alteration, addition, or deletion to this Grant by Subrecipient is not valid.
2. Effect of Changes in Federal and State Laws. Any alterations, additions, or deletions to this Grant that are required by changes in federal and state laws, regulations or policy are automatically incorporated into this Grant without written amendment to this Grant and shall become effective upon the date designated by such law or regulation. In the event DHS/FEMA or TDEM determines that changes are necessary to this Grant after an award has been made, including changes to the period of performance or terms and conditions, Subrecipient shall be notified of the changes in writing. Once notification has

REGULAR SESSION CITY COUNCIL MEETING PACKET FOR THE MEETING TO BE HELD ON SEPTEMBER 20, 2021

been made, any subsequent request for funds will indicate Subrecipient's acceptance of the changes to this Grant.

3. Suspension. In the event Subrecipient fails to comply with any term of this Grant, TDEM may, upon written notification to Subrecipient, suspend this Grant, in whole or in part, withhold payments to Subrecipient and prohibit Subrecipient from incurring additional obligations of this Grant's funds.
4. Termination. TDEM shall have the right to terminate this Grant, in whole or in part, at any time before the end of the Performance Period, if TDEM determines that Subrecipient has failed to comply with any term of this Grant. TDEM shall provide written notice of the termination and include:
   a. The reason(s) for such termination;
   b. The effective date of such termination; and
   c. In the case of partial termination, the portion of this Grant to be terminated.
   d. Appeal may be made to the Deputy Chief of the Texas Division of Emergency Management - Recovery & Mitigation.

M. **Enforcement**. If Subrecipient materially fails to comply with any term of this Grant, whether stated in a federal or state statute or regulation, an assurance, in a state plan or application, a notice of award, or elsewhere, TDEM or DHS/FEMA may take one or more of the following actions, as appropriate in the circumstances:

1. Increased monitoring of projects and require additional financial and performance reports
2. Require all payments as reimbursements rather than advance payments
3. Temporarily withhold payments pending correction of the deficiency
4. Disallow or deny use of funds and matching credit for all or part of the cost of the activity or action not in compliance;
5. Request DHS/FEMA to wholly or partially de-obligate funding for a project
6. Temporarily withhold cash payments pending correction of the deficiency by subrecipient or more severe enforcement action by TDEM or DHS/FEMA;
7. Withhold further awards for the grant program
8. Take other remedies that may be legally available

In taking an enforcement action, TDEM will provide Subrecipient an opportunity for a hearing, appeal, or other administrative proceeding to which Subrecipient is entitled under any statute or regulation applicable to the action involved.

The costs of Subrecipient resulting from obligations incurred by Subrecipient during a suspension or after termination of this Grant are not allowable unless TDEM or DHS/FEMA expressly authorizes them in the notice of suspension or termination or subsequently.

Other Subrecipient costs during suspension or after termination which are necessary and not reasonably avoidable are allowable if:

- The costs result from obligations which were properly incurred by Subrecipient before the effective date of suspension or termination, are not in anticipation of it, and in the case of a termination, are non-cancellable; and
- The costs would be allowable if this Grant were not suspended or expired normally at the end of the funding period in which the termination takes effects.

The enforcement remedies identified in this section, including suspension and termination, do not preclude Subrecipient from being subject to "Debarment and Suspension" under E.O.

REGULAR SESSION CITY COUNCIL MEETING PACKET FOR THE MEETING TO BE HELD ON SEPTEMBER 20, 2021

12549. 2 C.F.R., Appendix II to Part 200, (I).

N. **Conflicts of Interest**. The subrecipient will maintain written standards of conduct covering conflicts of interest and governing the actions of its employees engaged in the selection, award and administration of contracts and will establish safeguards to prohibit employees from using their positions for a purpose that constitutes or presents the appearance of personal or organizational conflict of interest or personal gain.

O. **Closing of this Grant**. TDEM will close each subaward after receiving all required final documentation from the Subrecipient. If the close out review and reconciliation indicates that Subrecipient is owed additional funds, TDEM will send the final payment automatically to Subrecipient. If Subrecipient did not use all the funds received, TDEM will recover the unused funds.

At the completion and closure of all Subrecipient's projects (subawards), TDEM will request the Subrecipient to Certify the completion of all projects (subawards) in accordance of the grants terms and conditions to state there are no further claims under this subgrant.
The closeout of this Grant does not affect:

1. DHS/FEMA or TDEM's right to disallow costs and recover funds on the basis of a later audit or other review;
2. Subrecipient's obligation to return any funds due as a result of later refunds, corrections, or other transactions;
3. Records retention requirements, property management requirements, and audit requirements, as set forth herein; and
4. Any other provisions of this Grant that impose continuing obligations on Subrecipient or that govern the rights and limitations of the parties to this Grant after the expiration or termination of this Grant.

P. **Notices.** All notices and other communications pertaining to this agreement shall be delivered in electronic format and/or writing and shall be transmitted by fax, e-mail, personal hand-delivery (and receipted for) or deposited in the United States Mail, as certified mail, return receipt requested and postage prepaid, to the other party.

REGULAR SESSION CITY COUNCIL MEETING PACKET FOR THE MEETING TO BE HELD ON SEPTEMBER 20, 2021

REGULAR SESSION CITY COUNCIL MEETING PACKET FOR THE MEETING TO BE HELD ON SEPTEMBER 20, 2021

EXHIBIT A

ASSURANCES - NON-CONSTRUCTION PROGRAMS See Standard Form 424B

As the duly authorized representative of Subrecipient, I certify that Subrecipient:

1. Has the legal authority to apply for Federal assistance and the institutional, managerial and financial capability (including funds sufficient to pay the non-Federal share of project cost) to ensure proper planning, management and completion of the project described in this Grant.

2. Will give the Department of Homeland Security, the Texas Division of Emergency Management, the Comptroller General of the United States and, if appropriate, the State, through any authorized representative, access to and the right to examine all records, books, papers, or documents related to this Grant and will establish a proper accounting system in accordance with generally accepted accounting standards or agency directives.

3. Will establish safeguards to prohibit employees from using their positions for a purpose that constitutes or presents the appearance of personal or organizational conflict of interest or personal gain.

4. Will initiate and complete the work within the applicable time frame after receipt of approval of the awarding agency.

5. Will comply with the Intergovernmental Personnel Act of 1970 (42 U.S.C. §§4728-4763) relating to prescribed standards for merit systems for programs funded under one of the 19 statutes or regulations specified in Appendix A of OPM's Standards for a Merit System of Personnel Administration (5 C.F.R. 900, Subpart F).

6. Will comply with all Federal statutes relating to nondiscrimination. These include but are not limited to: (a) Title VI of the Civil Rights Act of 1964 (P.L. 88-352) which prohibits discrimination on the basis of race, color or national origin; (b) Title IX of the Education Amendments of 1972, as amended (20 U.S.C. §§1681-1683, and 1685-1686 and 44 C.F.R. Part 19), which prohibits discrimination on the basis of sex; (c) Section 504 of the Rehabilitation Act of 1973, as amended (29 U.S.C. §794), which prohibits discrimination on the basis of handicaps; (d) the Age Discrimination Act of 1975, as amended (42 U.S.C. §§6101-6107), which prohibits discrimination on the basis of age; (e) the Drug Abuse Office and Treatment Act of 1972 (P.L. 92-255), as amended, relating to nondiscrimination on the basis of drug abuse; (f) the Comprehensive Alcohol Abuse and Alcoholism Prevention, Treatment and Rehabilitation Act of 1970 (P.L. 91-616), as amended, relating to nondiscrimination on the basis of alcohol abuse or alcoholism; (g) §§523 and 527 of the Public Health Service Act of 1912 (42 U.S.C. §§290dd-3 and 290ee-3), as amended, relating to confidentiality of alcohol and drug abuse patient records; (h) Title VIII of the Civil Rights Act of 1968 (42 U.S.C. §§3601 et seq.), as amended, relating to nondiscrimination in the sale, rental or financing of housing; (i) any other nondiscrimination provisions in the specific statute(s) under which agreement for Federal assistance is being made; and (j) the requirements of any other nondiscrimination statute(s) which may apply to the application.

7. Will comply or has already complied with the requirements of Titles II and III of the Uniform Relocation Assistance and Real Property Acquisition Policies Act of 1970 (P.L. 91-646) which provide for fair and equitable treatment of persons displaced or whose property is acquired as a result of Federal or federally-assisted programs. These requirements apply to all interests in real property acquired for project purposes regardless of Federal participation in purchases.

8. Will comply, as applicable, with provisions of the Hatch Act (5 U.S.C. §§1501-1508 and 7324-7328) which limit the political activities of employees whose principal employment activities are funded in whole or in part with Federal funds.

9. Will comply, as applicable, with the provisions of the Davis-Bacon Act (40 U.S.C. §§276a to 276a-7), the Copeland Act (40 U.S.C. §276c and 18 U.S.C. §874), and the Contract Work Hours and Safety Standards Act (40 U.S.C. §§327-333), regarding labor standards for federally-assisted construction sub-agreements.

10. Will comply, if applicable, with flood insurance purchase requirements of Section 102(a) of the Flood Disaster Protection Act of 1973 (P.L. 93-234) which requires recipients in a special flood hazard area to participate in the program and to purchase flood insurance if the total cost of insurable construction and acquisition is $10,000 or more.

11. Will comply with environmental standards which may be prescribed pursuant to the following: (a) institution of environmental quality control measures under the National Environmental Policy Act of 1969 (P.L. 91-190 as amended by 42 U.S.C. 4311 et seq. and Executive Order (EO) 11514) which establishes national policy goals and procedures to protect and enhance the environment, including protection against natural disasters. To comply with NEPA for DHS grant-supported activities, DHS-FEMA requires the environmental aspects to be reviewed and evaluated before final action on the application; (b) notification of violating facilities pursuant to EO 11738; (c) protection of wetlands pursuant to EO 11990; (d) evaluation of flood hazards in floodplains in accordance with EO 11988; (e) assurance of project consistency with the approved State management program developed under the Coastal Zone Management Act of 1972 (16 U.S.C. §§1451 et seq.); (f) comply with the Clean Air Act of 1977, (42 U.S.C. §§7401 et seq. and Executive Order 11738) providing for the protection of and enhancement of the quality of the nation's air resources to promote public health and welfare and for restoring and maintaining the chemical, physical, and biological integrity of the nation's waters; (g) protection of underground sources of drinking water under the Safe Drinking Water Act of 1974, as amended (P.L. 93-523); and, (h) protection of endangered species under the Endangered Species Act of 1973, as amended (P.L. 93- 205).

12. Will comply with the Wild and Scenic Rivers Act of 1968 (16 U.S.C. §§1271 et seq.) related to protecting components or potential components of the national wild and scenic rivers system.

13. Will assist the awarding agency in assuring compliance with Section 106 of the National Historic Preservation Act of 1966, as amended (16 U.S.C. §470), EO 11593 (identification and protection of historic properties), and the Archaeological and Historic Preservation Act of 1974 (16 U.S.C. §§469a-1 et seq.).

14. Will comply with P.L. 93-348, 45 C.F.R. 46, and DHS Management Directive 026-044 (Directive) regarding the protection of human subjects involved in research, development, and related activities supported by this Grant. "Research" means a systematic investigation, including research, development, testing, and evaluation designed to develop or contribute to general knowledge. See Directive for additional provisions for including humans in the womb, pregnant women, and neonates (Subpart B); prisoners (Subpart C); and children (Subpart D). See also state and local law for research using autopsy materials.

15. Will comply with the Laboratory Animal Welfare Act of 1966 (P.L. 89-544, as amended, 7 U.S.C. §§2131 et seq.) which requires the minimum standards of care and treatment for vertebrate animals bred for commercial sale, used in research, transported commercially, or exhibited to the public according to the Guide for Care and Use of Laboratory Animals and Public Health Service Policy and Government Principals Regarding the Care and Use of Animals.

16. Will comply with the Lead-Based Paint Poisoning Prevention Act (42 U.S.C. §§4801 et seq.), which prohibits the use of lead-based paint in construction or rehabilitation of residence structures.

17. Will cause to be performed the required financial and compliance audits in accordance with the Single Audit Act Amendments of 1996 and OMB Circular No. A-133 (now OMB 2 C.F.R. 200.500), "Audits of States, Local Governments, and Non-Profit Organizations."

18. Will comply with all applicable requirements of all other Federal laws, executive orders, regulations, grant guidance, and policies governing this Grant.

EXHIBIT B
ASSURANCES - CONSTRUCTION PROGRAMS See Standard Form 424D

As the duly authorized representative of Subrecipient, I certify that Subrecipient:

1. Has the legal authority to apply for Federal assistance, and the institutional, managerial and financial capability (including funds sufficient to pay the non-Federal share of project costs) to ensure proper planning, management and completion of project described in this Grant.
2. Will give the Department of Homeland Security, the Texas Division of Emergency Management, the Comptroller General of the United States and, if appropriate, the State, the right to examine all records, books, papers, or documents related to this Grant and will establish a proper accounting system in accordance with generally accepted accounting standards or agency directives.
3. Will not dispose of, modify the use of, or change the terms of the real property title or other interest in the site and facilities without permission and instructions from the awarding agency. Will record the Federal awarding agency directives and will include a covenant in the title of real property acquired in whole or in part with Federal assistance funds to assure nondiscrimination during the useful life of this Grant.
4. Will comply with the requirements of the assistance awarding agency with regard to the drafting, review and approval of construction plans and specifications.
5. Will provide and maintain competent and adequate engineering supervision at the construction site to ensure that the complete work conforms with the approved plans and specifications and will furnish progressive reports and such other information as may be required by the awarding agency or State.
6. Will initiate and complete the work within the applicable time frame after receipt of approval of the awarding agency.
7. Will establish safeguards to prohibit employees from using their positions for a purpose that constitutes or presents the appearance of personal or organizational conflict of interest or personal gain.
8. Will comply with the Intergovernmental Personnel Act of 1970 (42 U.S.C. §§4728-4763) relating to prescribed standards of merit systems for programs funded under one of the 19 statutes or regulations specified in Appendix A of OPM's Standards for a Merit System of Personnel Administration (5 C.F.R. 900, Subpart F).
9. Will comply with the Lead-Based Paint Poisoning Prevention Act (42 U.S.C. §§4801 et seq.) which prohibits the use of lead-based paint in construction or rehabilitation of residence structures.
10. Will comply with all Federal statutes relating to nondiscrimination. These include but are not limited to: (a) Title VI of the Civil Rights Act of 1964 (P.L. 88-352) which prohibits discrimination on the basis of race, color or national origin; (b) Title IX of the Education Amendments of 1972, as amended (20 U.S.C. §§1681 1683, and 1685-1686 and 44 C.F.R. Part 19), which prohibits discrimination on the basis of sex; (c) Section 504 of the Rehabilitation Act of 1973, as amended (29) U.S.C. §794), which prohibits discrimination on the basis of handicaps; (d) the Age Discrimination Act of 1975, as amended (42 U.S.C. §§6101-6107), which prohibits discrimination on the basis of age; (e) the Drug Abuse Office and Treatment Act of 1972 (P.L. 92-255), as amended relating to nondiscrimination on the basis of drug abuse; (f) the Comprehensive Alcohol Abuse and Alcoholism Prevention, Treatment and rehabilitation Act of 1970 (P.L. 91-616), as amended, relating to nondiscrimination on the basis of alcohol abuse or alcoholism; (g) §§523 and 527 of the Public Health Service Act of 1912 (42 U.S.C. §§290dd-3 and 290ee-3), as amended, relating to confidentiality of alcohol and drug abuse patient records; (h) Title VIII of the Civil Rights Act of 1968 (42 U.S.C. §§3601 et seq.), as amended, relating to nondiscrimination in the sale, rental or financing of housing; (i) any other nondiscrimination provisions in the specific statue(s) under which agreement for Federal assistance is being made; and (j) the requirements of any other nondiscrimination statue(s) which may apply to the agreement.
11. Will comply or has already complied with the requirements of Titles II and III of the Uniform Relocation Assistance and Real Property Acquisition Policies Act of 1970 (P.L. 91-646) which provide for fair and equitable treatment of persons displaced or whose property is acquired as a result of Federal and federally-assisted programs. These requirements apply to all interests in real property acquired for project purposes regardless of Federal participation in purchases.
12. Will comply with the provisions of the Hatch Act (5 U.S.C. §§1501-1508 and 7324-7328) which limit the political activities of employees whose principal employment activities are funded in whole or in part with Federal funds.
13. Will comply, as applicable, with the provisions of the Davis-Bacon Act (40 U.S.C. §§276a to 276a-7), the Copeland Act (40 U.S.C. §276c and 18 U.S.C. §874), and the Contract Work Hours and Safety Standards Act (40 U.S.C. §§327- 333) regarding labor standards for federally- assisted construction sub-agreements.
14. Will comply with flood insurance purchase requirements of Section 102(a) of the Flood Disaster Protection Act of 1973 (P.L. 93-234) which requires recipients in a special flood hazard area to participate in the program and to purchase flood insurance if the total cost of insurable construction and acquisition is $10,000 or more.
15. Will comply with environmental standards which may be prescribed pursuant to the following: (a) institution of environmental quality control measures under the National Environmental Policy Act of 1969 (P.L. 91-190) as amended by 42 U.S.C. 4311 et seq. and Executive Order (EO) 11514 which establishes national policy goals and procedures to protect and enhance the environment, including protection against natural disasters; (b) notification of violating facilities pursuant to EO 11738; (c) protection of wetlands pursuant to EO 11990; (d) evaluation of flood hazards in floodplains in accordance with EO 11988; (e) assurance of project consistency with the approved State management program developed under the Coastal Zone Management Act of 1972 (16 U.S.C. §§1451 et seq.); (f) comply with the Clean Air Act of 1977, (42 U.S.C. §§7401 et seq. and Executive Order 11738) providing for the protection of and enhancement of the quality of the nation's air resources to promote public health and welfare and for restoring and maintaining the chemical, physical, and biological integrity of the nation's waters; (g) protection of underground sources of drinking water under the Safe Drinking Water Act of 1974, as amended (P.L. 93-523); and, (h) protection of endangered species under the Endangered Species Act of 1973, as amended (P.L. 93-205).
16. Will comply with the Wild and Scenic Rivers Act of 1968 (16 U.S.C. §§1271 et seq.) related to protecting components or potential components of the national wild and scenic rivers system.
17. Will assist the awarding agency in assuring compliance with Section 106 of the National Historic Preservation Act of 1966, as amended (16 U.S.C. §470), EO 11593 (identification and protection of historic properties), and the Archaeological and Historic Preservation Act of 1974 (16 U.S.C. §§469a-1 et seq).
18. Will cause to be performed the required financial and compliance audits in accordance with the Single Audit Act Amendments of 1996 and OMB Circular No. A-133 (now OMB 2 C.F.R. 200.500), "Audits of States, Local Governments, and Non-Profit Organizations."
19. Will comply with all applicable requirements of all other Federal laws, executive orders, regulations, grant guidance and policies governing this Grant.

REGULAR SESSION CITY COUNCIL MEETING PACKET FOR THE MEETING TO BE HELD ON SEPTEMBER 20, 2021

Exhibit C

Certifications for Grant Agreements

The undersigned, as the authorized official, certifies the following to the best of his/her knowledge and belief.

A. No Federal appropriated funds have been paid or will be paid by or on behalf of the undersigned to any person for influencing or attempting to influence an officer or employee of an agency, a Member of Congress, an officer or employee of Congress, or an employee or a Member of Congress in connection with the awarding of any Federal contract, the making of any Federal grant, the making of any Federal loan, the entering into of any cooperative agreement, and the extension, continuation, renewal, amendment, or modification of any Federal contract, grant, loan, or cooperative agreement.

B. If any funds other than Federal appropriated funds have been paid or will be paid to any person for influencing or attempting to influence an officer or employee of any agency, a Member of Congress, an officer or employee of Congress, or an employee or a Member of Congress in connection with this Federal contract, grant, loan, or cooperative agreement, the undersigned shall complete and submit Standard Form-LLL Disclosure of Lobbying Activities, in accordance with its instructions.

C. The undersigned shall require that the language of this certification prohibiting lobbying be included in the award documents for all subawards at all tiers (including subcontracts, subgrants, and contracts under grants, loans, and cooperative agreements) and that all subrecipients shall certify and disclose accordingly. This certification is a material representation of fact upon which reliance was placed when this transaction was made or entered into. Submission of this certification is a prerequisite for making or entering into this transaction imposed by Section 1352, Title 31, U.S. Code. Any person who fails to file the required certification shall be subject to a civil penalty of not less than $10,000 and not more than $100,000 for each such failure.

D. As required by Executive Order 12549, Debarment and Suspension, and implemented at 28 C.F.R. Part 67, for prospective participants in primary covered transactions, as defined at 28 C.F.R. Part 67, Section 67.510. (Federal Certification), the Subrecipient certifies that it and its principals and vendors:

1. Are not debarred, suspended, proposed for debarment, declared ineligible, sentenced to a denial of Federal benefits by a State or Federal court, or voluntarily excluded from covered transactions by any Federal department or agency. Subrecipient can access debarment information by going to www.sam.gov and the State Debarred Vendor List at: www.window.state.tx.us/procurement/prog/vendor_performance/debarred.

2. Have not within a three-year period preceding this Grant been convicted of or had a civil judgment rendered against them for commission of fraud or a criminal offense in connection with obtaining, attempting to obtain, or performing a public (Federal, State, or local) transaction or contract under a public transaction, violation of Federal or State antitrust statutes or commission of embezzlement, theft, forgery, bribery, falsification or destruction of records, making false statements, or receiving stolen property;

3. Are not presently indicted for or otherwise criminally or civilly charged by a governmental entity (Federal, State, or local) with commission of any of the offenses enumerated in paragraph (D)(2) of this certification;

4. Have not within a three-year period preceding this Grant had one or more public transactions (Federal, State, or local) terminated for cause or default; or

5. Where Subrecipient is unable to certify to any of the statements in this certification, he or she shall attach an explanation to this Grant. (Federal Certification).

E. Federal funds will be used to supplement existing funds, and will not replace (supplant) funds that have been appropriated for the same purpose. Subrecipient may be required to supply documentation certifying that a reduction in non-federal resources occurred for reasons other than the receipt or expected receipt of federal funds.

F. Subrecipient will comply with 2 C.F.R. Part 180, Subpart C as a condition of receiving grant funds and Subrecipient will require such compliance in any subgrants or contract at the next tier.

G. Subrecipient will comply with the Drug-free Workplace Act, in Subpart B of 2 C.F.R. Part 3001.

H. Subrecipient is not delinquent on any Federal debt. Examples of relevant debt include delinquent payroll and other taxes, audit disallowances, and benefit overpayments. See OMB Circular A-129 and form SF-424, item number 17 for additional information and guidance.

I. Subrecipient will comply with all applicable requirements of all other federal laws, executive orders, regulations, program and administrative requirements, policies and any other requirements governing this Grant.

J. Subrecipient understands that failure to comply with any of the above assurances may result in suspension, termination or reduction of funds in this Grant.

REGULAR SESSION CITY COUNCIL MEETING PACKET FOR THE MEETING TO BE HELD ON SEPTEMBER 20, 2021

EXHIBIT D

State of Texas Assurances

As the duly authorized representative of Subrecipient, I certify that Subrecipient:

1. Shall comply with Texas Government Code, Chapter 573, by ensuring that no officer, employee, or member of the Subrecipient's governing body or of the Subrecipient's contractor shall vote or confirm the employment of any person related within the second degree of affinity or the third degree of consanguinity to any member of the governing body or to any other officer or employee authorized to employ or supervise such person. This prohibition shall not prohibit the employment of a person who shall have been continuously employed for a period of two years, or such other period stipulated by local law, prior to the election or appointment of the officer, employee, or governing body member related to such person in the prohibited degree.
2. Shall insure that all information collected, assembled, or maintained by the Subrecipient relative to a project will be available to the public during normal business hours in compliance with Texas Government Code, Chapter 552, unless otherwise expressly prohibited by law.
3. Shall comply with Texas Government Code, Chapter 551, which requires all regular, special, or called meetings of governmental bodies to be open to the public, except as otherwise provided by law or specifically permitted in the Texas Constitution.
4. Shall comply with Section 231.006, Texas Family Code, which prohibits payments to a person who is in arrears on child support payments.
5. Shall not contract with or issue a license, certificate, or permit to the owner, operator, or administrator of a facility if the Subrecipient is a health, human services, public safety, or law enforcement agency and the license, permit, or certificate has been revoked by another health and human services agency or public safety or law enforcement agency.
6. Shall comply with all rules adopted by the Texas Commission on Law Enforcement pursuant to Chapter 1701, Texas Occupations Code, or shall provide the grantor agency with a certification from the Texas Commission on Law Enforcement that the agency is in the process of achieving compliance with such rules if the Subrecipient is a law enforcement agency regulated by Texas Occupations Code, Chapter 1701.
7. Shall follow all assurances. When incorporated into a grant award or contract, standard assurances contained in the application package become terms or conditions for receipt of grant funds. Administering state agencies and subrecipients shall maintain an appropriate contract administration system to insure that all terms, conditions, and specifications are met. (See UGMS Section _.36 for additional guidance on contract provisions).
8. Shall comply with the Texas Family Code, Section 261.101, which requires reporting of all suspected cases of child abuse to local law enforcement authorities and to the Texas Department of Child Protective and Regulatory Services. Subrecipient shall also ensure that all program personnel are properly trained and aware of this requirement.
9. Shall comply with all federal statutes relating to nondiscrimination. These include but are not limited to: (a) Title VI of the Civil Rights Act of 1964 (P.L. 88-352), which prohibits discrimination on the basis of race, color, or national origin; (b) Title IX of the Education Amendments of 1972, as amended (20 U.S.C. §§1681-1683, and 1685-1686), which prohibits discrimination on the basis of sex; (c) Section 504 of the Rehabilitation Act of 1973, as amended (29 U.S.C. §794), which prohibits discrimination on the basis of handicaps and the Americans with Disabilities Act of 1990 including Titles I, II, and III of the Americans with Disability Act which prohibits recipients from discriminating on the basis of disability in the operation of public entities, public and private transportation systems, places of public accommodation, and certain testing entities, 44 U.S.C. §§ 12101-12213; (d) the Age Discrimination Act of 1974, as amended (42 U.S.C. §§6101-6107), which prohibits discrimination on the basis of age; (e) the Drug Abuse Office and Treatment Act of 1972 (P.L. 92-255), as amended, relating to nondiscrimination on the basis of drug abuse; (f) the Comprehensive Alcohol Abuse and Alcoholism Prevention, Treatment, and Rehabilitation Act of 1970 (P.L. 91-616), as amended, relating to the nondiscrimination on the basis of alcohol abuse or alcoholism; (g) §§523 and 527 of the Public Health Service Act of 1912 (42 U.S.C. §§290dd-3 and 290ee-3), as amended, relating to confidentiality of alcohol and drug abuse patient records; (h) Title VIII of the Civil Rights Act of 1968 (42 U.S.C. §§3601 et seq.), as amended, relating to nondiscrimination in the sale, rental, or financing of housing; (i) any other nondiscrimination provisions in the specific statute(s) under which application for Federal assistance is being made; and (j) the requirements of any other nondiscrimination statute(s) which may apply to this Grant.
10. Shall comply, as applicable, with the provisions of the Davis-Bacon Act (40 U.S.C. §§276a to 276a-7), the Copeland Act (40 U.S.C. §276c and 18 U.S.C. §874), and the Contract Work Hours and Safety Standards Act (40 U.S.C. §§327-333), regarding labor standards for federally assisted construction subagreements.
11. Shall comply with requirements of the provisions of the Uniform Relocation Assistance and Real Property Acquisitions Act of 1970 (P.L. 91-646), which provide for fair and equitable treatment of persons displaced or whose property is acquired as a result of Federal or federally assisted programs. These requirements apply to all interests in real property acquired for project purposes regardless of Federal participation in purchases.
12. Shall comply with the provisions of the Hatch Political Activity Act (5 U.S.C. §§7321-29), which limit the political activity of employees whose principal employment activities are funded in whole or in part with Federal funds.
13. Shall comply with the minimum wage and maximum hours provisions of the Federal Fair Labor Standards Act and the Intergovernmental Personnel Act of 1970, as applicable.

REGULAR SESSION CITY COUNCIL MEETING PACKET FOR THE MEETING TO BE HELD ON SEPTEMBER 20, 2021

14. Shall insure that the facilities under its ownership, lease, or supervision which shall be utilized in the accomplishment of the project are not listed on the Environmental Protection Agency's (EPA) list of Violating Facilities and that it will notify the Federal grantor agency of the receipt of any communication from the Director of the EPA Office of Federal Activities indicating that a facility to be used in the project is under consideration for listing by the EPA (EO 11738).

15. Shall comply with the flood insurance purchase requirements of Section 102(a) of the Flood Disaster Protection Act of 1973, Public Law 93-234. Section 102(a) requires the purchase of flood insurance in communities where such insurance is available as a condition for the receipt of any Federal financial assistance for construction or acquisition proposed for use in any area that has been identified by the Secretary of the Department of Housing and Urban Development as an area having special flood hazards.

16. Shall comply with environmental standards which may be prescribed pursuant to the following: (a) institution of environmental quality control measures under the National Environmental Policy Act of 1969 (P.L. 91-190) and Executive Order (EO) 11514; (b) notification of violating facilities pursuant to EO 11738; (c) protection of wetlands pursuant to EO 11990; (d) evaluation of flood hazards in floodplains in accordance with EO 11988; (e) assurance of project consistency with the approved state management program developed under the Coastal Zone Management Act of 1972 (16 U.S.C. §§1451 et seq.); (f) conformity of federal actions to State (Clear Air) Implem entation Plans under Section 176(c) of the Clear Air Act of 1955, as amended (42 U.S.C. §§7401 et seq.); (g) protection of underground sources of drinking water under the Safe Drinking Water Act of 1974, as amended (P.L. 93-523); and (h) protection of endangered species under the Endangered Species Act of 1973, as amended (P.L. 93-205).

17. Shall comply with the Wild and Scenic Rivers Act of 1968 (16 U.S.C. §§1271 et seq.) related to protecting components or potential components of the national wild and scenic rivers system.

18. Shall assist the awarding agency in assuring compliance with Section 106 of the National Historic Preservation Act of 1966, as amended (16 U.S.C. §470), EO 11593 (identification and protection of historic properties), and the Archaeological and Historic Preservation Act of 1974 (16 U.S.C. §§469a-1 et seq.).

19. Shall comply with the Laboratory Animal Welfare Act of 1966 (P.L. 89-544, as amended, 7 U.S.C. §§2131 et seq.) which requires the minimum standards of care and treatment for vertebrate animals bred for commercial sale, used in research, transported commer cially, or exhibited to the public according to the Guide for Care and Use of Laboratory Animals and Public Health Service Policy and Government Principals Regarding the Care and Use of Animals.

20. Shall comply with the Lead-Based Paint Poisoning Prevention Act (42 U.S.C. §§4801 et seq.) which prohibits the use of lead-based paint in construction or rehabilitation of residential structures.

21. Shall comply with the Pro-Children Act of 1994 (Public Law 103-277), which prohibits smoking within any portion of any indoor facility used for the provision of services for children.

22. Shall comply with all federal tax laws and are solely responsible for filing all required state and federal tax forms.

23. Shall comply with all applicable requirements of all other federal and state laws, executive orders, regulations, and policies governing this program.

24. And its principals are eligible to participate and have not been subjected to suspension, debarment, or similar ineligibility determined by any federal, state, or local governmental entity and it is not listed on a state or federal government's terrorism watch list as described in Executive Order 13224. Entities ineligible for federal procurement have Exclusions listed at https://www.sam.gov/portal/public/SAM/.

25. Shall adopt and implement applicable provisions of the model HIV/AIDS work place guidelines of the Texas Department of Health as required by the Texas Health and Safety Code, Ann., Sec. 85.001, et seq.

REGULAR SESSION CITY COUNCIL MEETING PACKET FOR THE MEETING TO BE HELD ON SEPTEMBER 20, 2021

EXHIBIT E

Environmental Review

As the duly authorized representative of Subrecipient, I certify that Subrecipient:

1. shall assess its federally funded projects for potential impact to environmental resources and historic properties.
2. shall submit any required screening form(s) as soon as possible and shall comply with deadlines established by TDEM. Timelines for the Environmental Planning and Historic Preservation (EHP) review process will vary based upon the complexity of the project and the potential for environmental or historical impact.
3. shall include sufficient review time within its project management plan to comply with EHP requirements. Initiation of any activity prior to completion of FEMA's EHP review will result in a non-compliance finding and TDEM will not authorize or release Grant funds for non-compliant projects.
4. as soon as possible upon receiving this Grant, shall provide information to TDEM to assist with the legally-required EHP review and to ensure compliance with applicable EHP laws and Executive Orders (EO) currently using the FEMA EHP Screening Form OMB Number 1660-0115/FEMA Form 024-0-01 and submitting it, with all supporting documentation, to TDEM for review. These EHP requirements include but are not limited to the National Environmental Policy Act, the National Historic Preservation Act, the Endangered Species Act, EO 11988 – Floodplain Management, EO 11990 – Protection of Wetlands, and EO 12898 – Environmental Justice. Subrecipient shall comply with all Federal, State, and local EHP requirements and shall obtain applicable permits and clearances.
5. shall not undertake any activity from the project that would result in ground disturbance, facility modification, or purchase and use of sonar equipment without the prior approval of FEMA. These include but are not limited to communications towers, physical security enhancements involving ground disturbance, new construction, and modifications to buildings.
6. shall comply with all mitigation or treatment measures required for the project as the result of FEMA's EHP review. Any changes to an approved project description will require re-evaluation for compliance with EHP requirements before the project can proceed.
7. if ground disturbing activities occur during project implementation, Subrecipient shall ensure monitoring of ground disturbance and if any potential archeological resources are discovered, Subrecipient shall immediately cease construction in that area and notify FEMA and the appropriate State Historical Preservation Office.

REGULAR SESSION CITY COUNCIL MEETING PACKET FOR THE MEETING TO BE HELD ON SEPTEMBER 20, 2021

EXHIBIT F

Additional Grant Conditions

1. Additional damage requiring a new Public Assistance project to be written must be reported within 60 days following the Project Scoping meeting with the State- Federal team.

2. All work must be done prior to the approved project completion deadline assigned to each Project (POP). Should additional time be required, a time extension request must be submitted which: a.) Identifies the projects requiring an extension. b.) Explains the reason for an extension. c.) Indicates the percentage of work that has been completed. d.) Provides an anticipated completion date. The reason for an extension must be based on extenuating circumstances or unusual project requirements that are beyond the control of your jurisdiction/organization. **Failure to submit a time extension request 60 days prior to the end of the period of performance may result in reduction or withdrawal of federal funds for approved work.**

3. Any significant change to a project's approved Scope of Work must be reported and approved through TDEM and FEMA before starting the project. Failure to do so will jeopardize grant funding. The Subrecipient shall submit requests for cost overruns requiring additional obligations to TDEM, who will forward to FEMA for review and approval prior to incurring costs.

4. The Project Completion and Certification Report must be submitted to TDEM within 60 days of all approved work being completed for each project. If any project requires the purchase of insurance as a condition of receiving federal funds, a copy of the current policy must be attached to this report, or Duplication of Benefits form certifying other funds were received to complete the project.

5. A cost overrun appeal on small ($128,900) Public Assistance projects must be reported to the Texas Division of Emergency Management (TDEM) within 60 days of completing the last small project in order to be considered for additional funding.

6. Appeals may be filed on any determination made by FEMA or TDEM. All appeals must be submitted to TDEM within 60 days from receiving written notice of the action you wish to appeal. Should you wish to appeal a determination contained in the project application, the 60 days will start the day the application is signed. Appeals for Alternative Projects will be subject to the terms of the signed agreement for the Alternative Project.

7. Public Assistance program projects will not receive funding until all of the requirements identified in the comments section of the Project Worksheet are met.

8. You may request a payment of funds on projects by initiating a Request for Reimbursement (RFR) in TDEM's Grant Management System (GMS) or an Advance of Funds Request (AFR), and including documentation supporting your request. Small Public Assistance projects are paid upon obligation and will be initiated by TDEM personnel. Payments for open projects must be requested at least quarterly if expenditures have been made in that quarter.

9. Subrecipients will be required to submit quarterly project reports (QPR) for open large projects using TDEM's GMS. Your assigned Grant Coordinator will coordinate the due date for your specific reporting. Public Assistance program small projects are typically exempt from quarterly reporting, however TDEM reserves the right to require QPRs on any smalls requiring a POP extension. The first quarterly report will be due at the end of the first full quarter following the quarter in which the project was obligated. No quarterlies are required for projects that Subrecipient has initiated a closeout request and has provided a certificate of completion. Failure to submit required quarterly reports for two or more quarters can result in withholding or deobligation of funding for Subrecipients until all reports are submitted and up-to-date.

REGULAR SESSION CITY COUNCIL MEETING PACKET FOR THE MEETING TO BE HELD ON SEPTEMBER 20, 2021

10. Subrecipients expending $750,000 or more in total Federal financial assistance in a fiscal year will be required to provide an audit made in accordance with OMB Uniform Guidance; Cost Principles, Audit, and Administrative Requirements for Federal Awards, Subpart F. A copy of the Single Audit must be submitted to your cognizant State agency or TDEM within nine months of the end of the subrecipient's fiscal year. Consult with your financial officer regarding this requirement. If not required to submit a single audit, a letter must be sent to TDEM certifying to this.

11. Subrecipients will not make any award to any party which is debarred or suspended, or is otherwise excluded from participation in the Federal assistance programs (EO 12549, Debarment and Suspension). Subrecipient must maintain documentation validating review of debarment list of eligible contractors.

12. Subrecipients must keep record of equipment acquired by federal funds for the life cycle of the equipment. A life cycle for most equipment will be three years, but could be longer. If the fair market value of a piece of equipment is valued over $5,000, FEMA will have the right to a portion of proceeds if equipment is sold. If the fair market value of a piece of equipment is less than $5,000, the property can either be retained, sold or designated as surplus with no further obligation to FEMA.

13. TDEM will be using the new FEMA Public Assistance Delivery Model to facilitate the writing of project worksheets (Portal). Subrecipient will be responsible for establishing and maintaining an active account in the Portal and to provide and upload timely, all information requested that is needed to write accurate project worksheets. The Portal will provide the Subrecipient visibility of the entire project writing process.

14. TDEM will be using its new Grant Management System (GMS) for Subrecipient grant management functions. Subrecipient will access GMS to initiate Requests for Reimbursements (RFR), Advance of Funds Requests (AFR), Time Extensions, Scope and Cost changes requests, Quarterly Reports, Project Closeouts, Appeals, and other items deemed necessary by TDEM. Requested forms and processes may be adjusted and changed to accommodate GMS processes and requirements. Subrecipient agrees to monitor GMS as necessary to properly manage and complete awarded projects under this agreement.

16.2 CFR 200.210(a)(15), 2 CFR 200.331(a)(1)(xiii) and (a)(4) make reference to indirect cost rates. The Subrecipient may use the negotiated Indirect Cost Rate approved by its cognizant agency, or may use the 10% de minimis rate of modified total direct costs (MTDC) (as per § 200.414) when receiving Management Costs.

REGULAR SESSION CITY COUNCIL MEETING PACKET FOR THE MEETING TO BE HELD ON SEPTEMBER 20, 2021

EXHIBIT G

Match Certification

Additional Grant Certifications

Subrecipient certifies that it has the ability to meet or exceed the cost share required for all subawards (Projects) and amendments (versions) under this Grant Agreement.

Duplication of Program Statement

Subrecipient certifies there has not been, nor will there be, a duplication of benefits for this project.

Match Certification

Federal Debt Disclosure

Subrecipient certifies that it is not delinquent on any Federal Debt.

For Hazard Mitigation Projects Only:

Maintenance Agreement

Applicant certifies that if there is a Maintenance Agreement needed for this facility copy of that agreement will be provided to TDEM.

Environmental Justice Statement

Federal Executive Order 12898 compliance requirements – If there are any concentrations of low income or minority populations in or near the HMGP project:

1. Applicant certifies that the HMGP project result will not result in a disproportionately high or adverse effect on low income or minority populations.

   OR

2. Applicant certifies that action will be taken to ensure achievement of environmental justice for low income and minority populations related to this HMGP project.

REGULAR SESSION CITY COUNCIL MEETING PACKET FOR THE MEETING TO BE HELD ON SEPTEMBER 20, 2021

Exhibit D

Jersey Village RFP – Generator Project Fee Proposal Form

The undersigned hereby declares that the instructions and specifications have been carefully examined and that emergency backup generators will be furnished and installed for the prices set forth in this Proposal. It is understood and agreed that the instructions, specifications, compliance questions, answers, and additional responses are an integral part of the Proposal submission from the undersigned.

The undersigned contractor further agrees and understands that the City of Jersey Village reserves the right to accept any Proposal, to reject any or all Proposals, to waive irregularities and/or informalities in any Proposal, to make the award in any manner the City believes to be in its best interest, and to reduce or eliminate this purchase agreement without prior notice.

Breakdown of Charges:

1. Fire Station Generator and Installation $ 98,040.08
2. Police Station Generator and Installation $ 56,611.68
3. Village Drive Water Treatment Plant Construction of Generator Pad $ 2,200.00
4. Village Drive Water Treatment Plant Generator and Installation $ 103,357.76

Total Cost of Proposal $ 260,209.52

Company Name:	Authorized Signer Name and Title:
Total Energy Solutions	Chad Ellison - General Manager
Signature of Authorized Signer:	Date:
	9/8/2021
Email Address:	Phone Number:
chade@totalenergysolutions.com	832-904-9259

REGULAR SESSION CITY COUNCIL MEETING PACKET FOR THE MEETING TO BE HELD ON SEPTEMBER 20, 2021

Total Energy Solutions
15811 Tuckerton Road
Houston, Texas 77095
Phone: 281-861-1284
Fax: 281-861-1288

Attention: Doug Hall

Reference: Install Generator & ATS at the Jersey Village Fire Department, Jersey Village, Texas

We are pleased to submit the following Proposal for Labor & Materials, to replace the existing generator and Automatic Transfer Switch (ATS), at the above referenced address, as discussed and instructed during the Pre-Bid Meeting.

SCOPE OF WORK

- Disconnect the output power, controls and 120 volt circuits, from the existing generator.
- Prepare the unit for removal, by others.
- Provide labor assistance in setting the new generator. Anchor new generator to the existing concrete pad.
- Reconnect existing feeders, 120 Volt power and other control wiring to the new gen set. Extend wiring as necessary.
- Utilize the existing ATS enclosure for the new ATS mechanism.
- Disconnect the existing ATS and remove the interior components and by-pass (connect) the normal power and load side power conductors, during the retrofit process.
- Receive and set the new ATS interior mechanism (FBO), in the existing enclosure.
- Retrofit the new ATS display screen, into the existing ATS enclosure door.
- Remove the by-pass wiring and connect all ATS conductors.
- Verify phase rotation and voltage.
- includes furnishing the new ATS components and Generator.
- includes Fees for the Plumbing Contractor's gas line installation or furnishing diesel fuel for the new generator.
- includes Crane, Rigging or Mechanical Contractor fees, associated with removal in reinstallation of the generator.
- Includes freight or transportation of equipment to or from the site.
- include trash removal from the site.
- Sales Tax & Bond Costs.

QUOTATION

Total Energy Solutions
20500 Clay Center Dr
Katy, TX 77449
281-861-1284

Quote Number	8460.1
Quote Date	08/23/2021
Terms	PRE-PAY
Customer ID	
Quote Expires	09/22/2021

Bill To:
City Of Jersey Village 16401 Lakeview Dr Jersey Village , TX 77040 Attn: Accounts Payable

Ship To:
City Of Jersey Village 16401 Lakeview Dr Jersey Village , TX 77040 Requested By: Mark Bitz Job/RFQ #:

Ship Via	Sales Rep	Taker
	Doug Hall	Doug Hall

Shipping Notes

Order Notes

Item ID Item Description	Quantity	UOM	Unit Price	Extended Price
QUOTE ITEM - HOU SP-2000-3-3N2 200 KW, 120/240 V, 3 PH, 60 HZ PSI NATURAL GAS FUEL	1.00	EA	62,957.65	62,957.65
Customer Part #: **Alternate Part #:** **Line Item Note:**				
QUOTE ITEM - HOU ATSN3R-800-3-3 800 AMP, 120/240 V, 3 PH, 60 HZ ASCO AUTO TRANSFER	1.00	EA	7,333.33	7,333.33
Customer Part #: **Alternate Part #:** **Line Item Note:**				
QUOTE ITEM - HOU Electrical Installation	1.00	EA	19,900.00	19,900.00
Customer Part #: **Alternate Part #:** **Line Item Note:**				

This document is strictly confidential, and not to be distributed to anyone other than the intended receiving party. Prices are subject to change without notice. Prices quoted do not include any federal, state or local sales, use, property, TERP or excise taxes. Taxable status and tax rates will be determined at time of order. All terms and conditions apply.

REGULAR SESSION CITY COUNCIL MEETING PACKET FOR THE MEETING TO BE HELD ON SEPTEMBER 20, 2021

Item ID Item Description	Quantity	UOM	Unit Price	Extended Price
QUOTE ITEM - HOU Crane, and Rigging **Customer Part #:** **Alternate Part #:** **Line Item Note:**	**1.00**	**EA**	**3,846.15**	**3,846.15**
TP-PLUMBER Plumbing Service **Customer Part #:** **Alternate Part #:** **Line Item Note:**	**1.00**	**EA**	**2,352.94**	**2,352.94**
QUOTE ITEM - HOU generator rental **Customer Part #:** **Alternate Part #:** **Line Item Note:**	**1.00**	**EA**	**1,650.00**	**1,650.00**

Total Lines: *6*

Sub-Total:	**98,040.08**
Tax:	**TBD**
Addons:	**0.00**
Total (Before Sales Tax):	**98,040.08**

This document is strictly confidential, and not to be distributed to anyone other than the intended receiving party. Prices are subject to change without notice. Prices quoted do not include any federal, state or local sales, use, property, TERP or excise taxes. Taxable status and tax rates will be determined at time of order. All terms and conditions apply.

REGULAR SESSION CITY COUNCIL MEETING PACKET FOR THE MEETING TO BE HELD ON SEPTEMBER 20, 2021

GILLETTE GENERATORS

LIQUID COOLED NAT. GAS ENGINE GENERATOR SET

60 HZ MODEL

SP-2000

Model		STANDBY 120°C RISE	
	HZ	LPG	N.G.
SP-2000-60 HERTZ	60	136	200

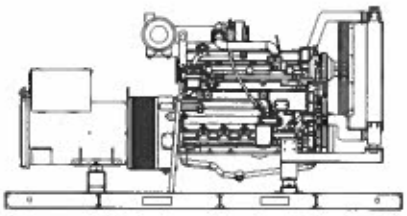

"OPEN" GEN-SET

There is no enclosure, so gen-set must be placed within a weather protected area, un-inhabited by humans or animals, with proper ventilation. Silencer not supplied, as installation requirements are not known. However, this item is available as optional equipment.

All generator sets are USA prototype built and thoroughly tested. Production models are USA factory built and 100% load tested.

UL2200, UL1446, UL508, UL142, UL498

NFPA 110, 99, 70, 37
All generator sets meet NFPA-110 Level 1, when equipped with the necessary accessories and installed per NFPA standards.

NEC 700, 701, 702, 708

NEMA ICS10, MG1, ICS6, AB1

ANSI C62.41, 27, 59, 32, 480, 40Q, 81U, 360-05

ASCE 7-05 & 7-10
All generator sets meet 180 MPH rating.

EPA 40CFR Part 60, 1048, 1054, 1065, 1068

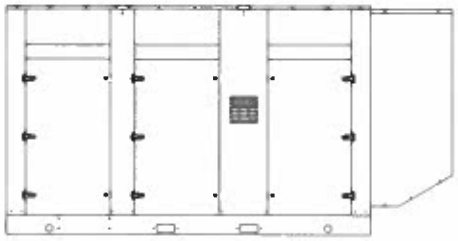

"LEVEL 2" HOUSED GEN-SET

Full aluminum weather protection and superior sound attenuation for specific low noise applications. Critical grade muffler is standard.

GENERATOR RATINGS					LIQUID PROPANE GAS FUEL		NATURAL GAS FUEL	
GENERATOR MODEL	VOLTAGE		PH	HZ	120°C RISE STANDBY RATING		120°C RISE STANDBY RATING	
	L-N	L-L			KW/KVA	AMP	KW/KVA	AMP
SP-2000-3-2	120	208	3	60	136/170	472	200/250	694
SP-2000-3-3	120	240	3	60	136/170	409	200/250	602
SP-2000-3-4	277	480	3	60	136/170	204	200/250	301
SP-2000-3-5	127	220	3	60	136/170	446	200/250	656
SP-2000-3-16	346	600	3	60	136/170	163	200/250	241

RATINGS: All three phase gen-sets are 12 lead windings, rated at .8 power factor. 120°C "STANDBY RATINGS" are strictly for gen-sets that are used for back-up emergency power to a failed normal utility power source. This standby rating allows varying loads, with no overload capability, for the entire duration of utility power outage. All gen-set power ratings are based on temperature rise measured by resistance method as defined by MIL-STD 705C and IEEE STD 115, METHOD 6.4.4. All generators have class H (180°C) insulation system on both rotor and stator windings. All factory tests and KW/KVA charts shown above are based on 120°C (standby) R/R winding temperature, within a maximum 40°C ambient condition. Generators operated at standby power ratings must not exceed the temperature rise limitation for class H insulation system, as specified in NEMA MG1-22.40. Specifications & ratings are subject to change without prior notice.

REGULAR SESSION CITY COUNCIL MEETING PACKET FOR THE MEETING TO BE HELD ON SEPTEMBER 20, 2021

APPLICATION AND ENGINEERING DATA FOR MODEL SP-2000-60 HZ

GENERATOR SPECIFICATIONS

Manufacturer..... Stamford Electric Generators
Model & Type..... UCID274J-311, 4 Pole, 12 Lead, Three Phase
..... UCI274H-17, 4 Pole, 6 Lead, 600V, Three Phase
Exciter..... Brushless, shunt excited
Voltage Regulator..... Solid State, HZ/Volts
Voltage Regulation..... ½%, No load to full load
Frequency..... Field convertible, 60 HZ to 50 HZ
Frequency Regulation..... ½% (½ cycle, no load to full load)
Unbalanced Load Capability..... 100% of standby amps
Total Stator and Load Insulation..... Class H, 180°C
Temperature Rise.....120°C R/R, standby rating @ 40°C amb.
3 Ø Motor Starting @ 30% Voltage Dip (208-240V) .... 620 kVA
3 Ø Motor Starting @ 30% Voltage Dip (480V)..... 840 kVA
3 Ø Motor Starting @ 30% Voltage Dip (600V)..... 850 kVA
Bearing.....1, Pre-lubed and sealed
Coupling..... Direct flexible disc
Total Harmonic Distortion..... Max 3 | % (MIL-STD705B)
Telephone Interference Factor..... Max 50 (NEMA MG1-22)
Deviation Factor.....Max 5% (MIL-STD 405B)
Ltd. Warranty Period ..... 24 Months from date of start-up or
..... 1000 hours use, first to occur.

GENERATOR FEATURES

- World Renown Stamford Electric Generator having UL-1446 certification on full amortisseur windings.
- Full generator protection with **Deep Sea 7420** controller, having UL-508 certification.
- Automatic voltage regulator with over-excitation, under-frequency compensation, under-speed protection, and EMI filtering. Entire solid-state board is encapsulated for moisture protection.
- Generator power ratings are based on temperature rise, measured by resistance method, as defined in MIL-STD 705C and IEEE STD 115, Method 6.4.4.
- Power ratings will not exceed temperature rise limitation for class H insulation as per NEMA MG1-22.40.
- Insulation resistance to ground, exceeds 1.5 meg-ohm.
- Stator receives 2000 V. hi-potential test on main windings, and rotor windings receive a 1500 V. hi-potential test, as per MIL-STD 705B.
- Complete engine-generator torsional acceptance, confirmed during initial prototype testing.
- Full load testing on all engine-generator sets, before shipping.
- Self ventilating and drip-proof & revolving field design

ENGINE SPECIFICATIONS AND APPLICATIONS DATA

ENGINE

Manufacturer..... Power Solutions Inc. (PSI)
Model and Type .....Heavy Duty 11.1LTCAC, 4 cycle
Aspiration.....Turbocharged & Charge Air Cooled
Cylinder Arrangement ..... 6 Cylinders, Inline
Displacement Cu. In. (Liters)..... 674 (11.1)
Bore & Stroke In. (Cm.) ..... 4.84 x 6.1 (12.3 x 15.5)
Compression Ratio.....10.5:1
Main Bearings & Style..... 7, Precision Half-Shell
Cylinder Head ..... Cast Iron
Pistons..... Cast Aluminum
Crankshaft.....Forged Steel
Exhaust Valve .....Inconel, A193
Governor ..... Electronic
Frequency Reg. (no load-full load)..... Isochronous
Frequency Reg. (steady state)..... ± 1/4%
Air Cleaner.....Dry, Replaceable Cartridge
Engine Speed 1800
Piston Speed, ft/min (m./min)..... 18310 (558)
Max Power, bhp (kwm) Standby/LPG..... 208 (155)
Max Power, bhp (kwm) Standby/NG 315 (235)
Ltd. Warranty Period ..... 12 Months or 2000 hrs., first to occur

FUEL SYSTEM

Type .....LPG or NAT. GAS, Vapor Withdrawal
Fuel Pressure (kpa), in. H_2O* .....(1.74-2.74), 7"-11"
Secondary Fuel Regulator..... NG or LPG Vapor System
Auto Fuel Lock-Off Solenoid.....Standard on all sets
Fuel Supply Inlet Line ..... 2" NPTF

FUEL CONSUMPTION

LP GAS: FT^3/HR (M^3/HR)	STANDBY
100% LOAD	703 (19.9)
75% LOAD	600 (17.0)
50% LOAD	406 (11.5)
LPG = 2500 BTU X FT^3/HR = Total BTU/HR LPG Conversion: 8.50 FT^3 = 1 LB. : 36.4 FT^3 = 1 GAL.	

NAT. GAS: FT^3/HR (M^3/HR)	STANDBY
100% LOAD	2115 (59.9)
75% LOAD	1649 (46.7)
50% LOAD	1158 (32.8)
NG = 1000 BTU X FT^3/HR = Total BTU/HR	

OIL SYSTEM

Type .....Full Pressure
Oil Pan Capacity qt. (L) 26.4 (25.0)
Oil Pan Cap. W/ filter qt. (L) 28.8 (27.0)
Oil Filter.....1, Replaceable Spin-On

ELECTRICAL SYSTEM

Ignition System ..... Electronic
Eng. Alternator/Starter: 24 VDC, negative ground, 45 amp/hr.

Recommended battery to -18°C (0° F): ...(2) 12 VDC, BCI# 27, Max. Dimensions: 12"lg x 6 3/4" wi x 9" hi, with standard round posts. Min output 700 CCA. Battery tray (max. dim. at 12"lg x 7"wi). This model has (2) battery trays, (2) hold down straps, (2) sets of battery cables, and (1) battery charger. Installation of (2) 12VDC starting batteries connected in series for 24VDC output is required, with possible higher AMP/HR rating, as described above, if the normal environment temperature averages -13° F (-25°C) or cooler.

REGULAR SESSION CITY COUNCIL MEETING PACKET FOR THE MEETING TO BE HELD ON SEPTEMBER 20, 2021

APPLICATION AND ENGINEERING DATA FOR MODEL SP-2000-60 HZ

COOLING SYSTEM

Type of System ..... Pressurized, closed recovery
Coolant Pump ..... Pre-lubricated, self-sealing
Cooling Fan Type (no. of blades) ..... Pusher (12)
Fan Diameter inches (mm) ..... 38" (965)
Ambient Capacity of Radiator °F (°C) 125 (51.6)
Engine Jacket Coolant Capacity Gal (L) 5.5 (21.0)
Radiator Coolant Capacity Gal. (L) 30.6 (116)
Maximum Restriction of Cooling Air Intake
and discharge side of radiator in. H_20 (kpa) ..... 0.5 (.125)
Water Pump Capacity gpm (L/min) 75 (284)
Heat Reject Coolant: Btu/min (kw) 8100 (142)
Low Radiator Coolant Level Shutdown ..... Standard
Note: Coolant temp. shut-down switch setting at 230°F (110°C) with 50/50 (water/antifreeze) mix.

AIR REQUIREMENTS

Combustion Air, cfm (m^3/min) 448 (12.7)
Radiator Air Flow cfm (m^3/min) 18,000 (510)
Heat Rejected to Ambient:
Engine: kw (btu/min) 60.3 (3430)
Alternator: kw (btu/min) 16 (910)

EXHAUST SYSTEM

Exhaust Outlet Size ..... 3.5"
Max. Back Pressure, in. hg (KPA) 3.0 (10.2)
Exhaust Flow, at rated kw: cfm (m^3/min) 1425 (40.3)
Exhaust Temp., at rated kw: °F (°C) 1382 (750)
Engines are EPA certified for Natural Gas.

SOUND LEVELS MEASURED IN dB(A)

	Open Set	Level 2 Encl.
Level 2, Critical Silencer	90	75
Level 3, Hospital Silencer		71

Note: Open sets (no enclosure) has (2) optional silencer system choices due to unknown job-site applications. Level 2 enclosure has installed critical silencer with upgrade to hospital silencer. Sound tests are averaged from several test points and taken at 23 ft. (7 m) from source of noise at normal operation.

DERATE GENERATOR FOR ALTITUDE

3% per 1000 ft.(305m) above 3000 ft. (914m) from sea level

DERATE GENERATOR FOR TEMPERATURE

2% per 10°F(5.6°C) above 104°F (40°C)

DIMENSIONS AND WEIGHTS

	Open Set	Level 2 Enclosure
Length in (cm)	132 (335)	186 (473)
Width in (cm)	52 (132)	72 (183)
Height in (cm)	80 (203)	94 (239)
3 Ø Net Weight lbs (kg)	6375 (2891)	8975 (4071)
3 Ø Net Weight lbs (kg)	6725 (3050)	9325 (4230)

DEEP SEA 7420 DIGITAL MICROPROCESSOR CONTROLLER



Deep Sea 7420

The "7420" controller is an auto start mains (utility) failure module for single gen-set applications. This controller includes a backlit LCD display which continuously displays the status of the engine and generator at all times.

The "**7420**" controller will also monitor speed, frequency, voltage, current, oil pressure, coolant temp., and fuel levels. These modules have been designed to display warning and shut down status. It also includes: (11) configurable inputs • (8) configurable outputs • voltage monitoring • mains (utility) failure detection. • (250) event logs • configurable timers • automatic shutdown or warning during fault detection • remote start (on load) • engine preheat • advanced metering capability • hour meter • text LCD displays • protected solid state outputs • test buttons for: stop/reset • manual mode • auto mode • lamp test • start button • power monitoring (kWh, kVAr, kVAh, kVArh)

This controller includes expansion features including RS232, RS484 (using MODBUS-RTU/TCP), direct USB connection with PC, expansion optioned using DSENet for remote annunciation and remote relay interfacing for a distance of up to 3300FT. The controller software is freely downloadable from the internet and allows monitoring with direct USB cable, LAN, or by internet via the built in web interface.

LOW LOAD CONDITIONS: Operation of PSI HD engines at low-load conditions should be limited to no more than one (1) hour per twenty-four (24) hour period. If the application requires extended time at light loads, it is recommended that the engine load be increased to at least 70% of mechanical rating for a minimum of two (2) hours per fifty (50) hours of low-load operation. Piston sealing rings rely on adequate cylinder firing pressure and temperature to seal the combustion chamber and prevent excessive engine oil from entering the power cylinder. Under low loads these rings will not seal properly, resulting in oil being burned in the combustion chamber and carbon deposits on pistons and valves. This mechanism is well-documented in reciprocating engines of all fuel types and is often referred to as "wet-stacking."

REGULAR SESSION CITY COUNCIL MEETING PACKET FOR THE MEETING TO BE HELD ON SEPTEMBER 20, 2021

STANDARD FEATURES FOR MODEL SP-2000-60 HZ

STANDARD FEATURES

CONTROL PANEL:

Deep Sea 7420 digital microprocessor with logic allows programming in the field. Controller has:

- STOP-MANUAL-AUTO modes and automatic engine shutdowns, signaled by full text LCD indicators:
- Low oil pressure
- High engine temp
- Low Radiator Level
- Three auxiliary alarms
- Battery fail alarm
- Engine fail to start
- Engine over speed
- Engine under speed
- Over & under voltage

Also included is tamper-proof engine hour meter

ENGINE:

Full flow oil filter • Air filter • Oil pump • Solenoid type starter motor • Hi-temp radiator • Jacket water pump • Thermostat • Pusher fan and guard • Exhaust manifold • 24 VDC battery charging alternator • Flexible exhaust connector • "Isochronous" duty, electronic governor • Secondary dry fuel regulator • Dry fuel lock-off solenoid • Vibration isolators • Closed coolant recovery system with 50/50 water to anti-freeze mixture

AC GENERATOR SYSTEM:

AC generator • Shunt excited • Brushless design • Circuit Breaker installed and wired to gen-set • Direct connection to engine with flex disc • Class H, 180°C insulation • Self ventilated • Drip proof construction • UL Certified

VOLTAGE REGULATOR:

½% Voltage regulation • EMI filter • Under-speed protection • Over-excitation protection • total encapsulation

DC ELECTRICAL SYSTEM:

Battery tray • Battery cables • Battery hold down straps • 2-stage battery float charger with maintaining & recharging automatic charge stages

WEATHER/SOUND PROOF ALUMINUM HOUSING CORROSION RESISTANT PROTECTION CONSISTING OF:

- 9 Heated and Agitated Wash Stages
- Zinc Phosphate Etching-coating Stage
- Final Baked On Enamel Powder Coat
- 18/8 Stainless Steel Hardware

Design & specifications subject to change without prior notice. Dimensions shown are approximate. Contact Gillette for certified drawings. DO NOT USE DIMENSIONS FOR INSTALLATION PURPOSES

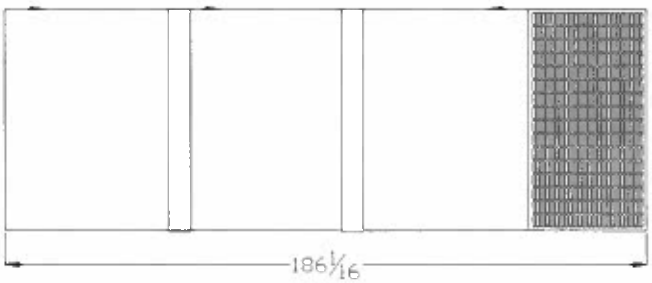

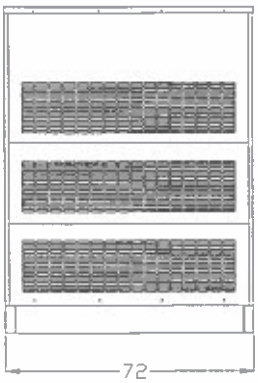

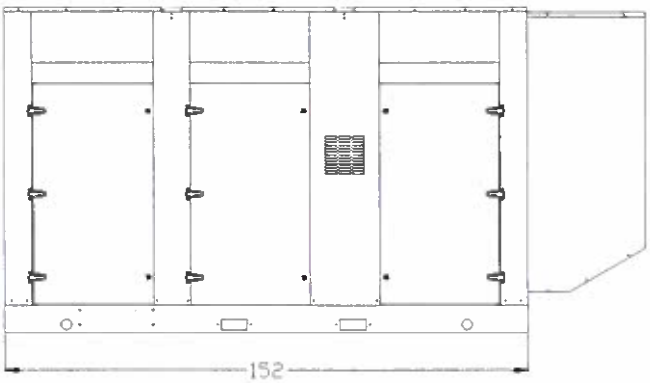

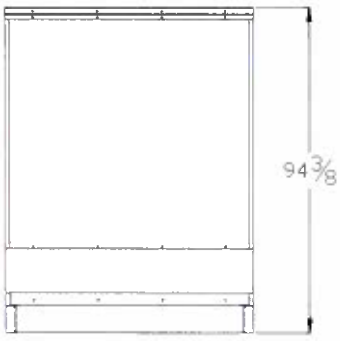

REGULAR SESSION CITY COUNCIL MEETING PACKET FOR THE MEETING TO BE HELD ON SEPTEMBER 20, 2021

PSI HEAVY-DUTY

11.1L ENGINE

INDUSTRIAL STATIONARY

Product Overview

The PSI HD 11.1L is a U.S. EPA-certified natural gas and propane engine developed from the block up to be a reliable and durable power unit. Built upon a proven marine-diesel grade block, the 6-cylinder in-line, turbocharged and after-cooled engine features replaceable wet liners and water-cooled exhaust.

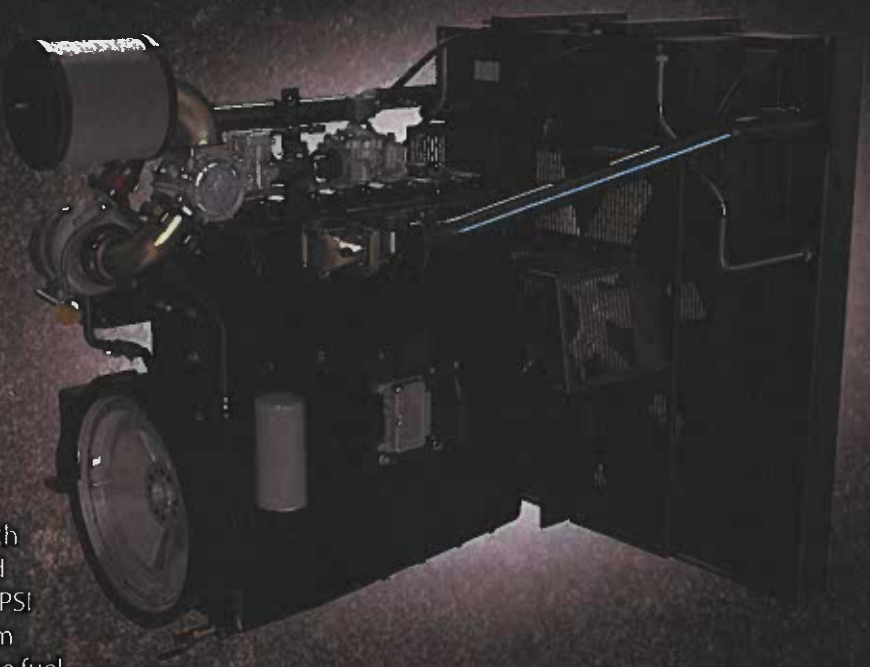

Superior engine performance is provided by an ECU that integrates and coordinates all critical functions including: Governor, Variable Ignition Timing, Air Fuel Ratio Control, Knock Suppression and Engine Protection.

The PSI HD product lineup has six models with displacements of 8.1L, 11.1L, 14.6L, 18.3L and 21.9L. These engines are an extension of the PSI product line, which is based upon blocks from 650cc to 8.8L. All PSI engines feature the same fuel systems and controls, simplifying your application development and support.

FEATURES

- U.S. EPA-Certified and CARB-Compliant
- Dual Fuel with Automatic Change-Over
- 50C Ambient Cooling Capacity
- 3-Way Catalytic Converter
- Air Filtration
- UL2200-Compliant or Listed Components
- MasterTrak Telematics service (included for 1 year)

MAXIMUM PERFORMANCE
NO COMPROMISES

POWER & PERFORMANCE • EMISSION-CERTIFIED • FUEL-FLEXIBLE

REGULAR SESSION CITY COUNCIL MEETING PACKET FOR THE MEETING TO BE HELD ON SEPTEMBER 20, 2021

PSI **HEAVY-DUTY**

11.1L ENGINE
ENGINEERING DATA

REGULAR SESSION CITY COUNCIL MEETING PACKET FOR THE MEETING TO BE HELD ON SEPTEMBER 20, 2021

11.1L Industrial Stationary Engine

Displacement	673 cid	11,030 cc
Compression Ratio	10.5:1	
Bore & Stroke	4.84 in x 6.1 in	123 mm x 155 mm
kWe	200 @ 1,800 rpm (Natural Gas)	175 @ 1,500 rpm (Natural Gas)
Emission-Certified	EPA, CARB – Industrial Stationary	
Fuel Types	Natural Gas / Propane	

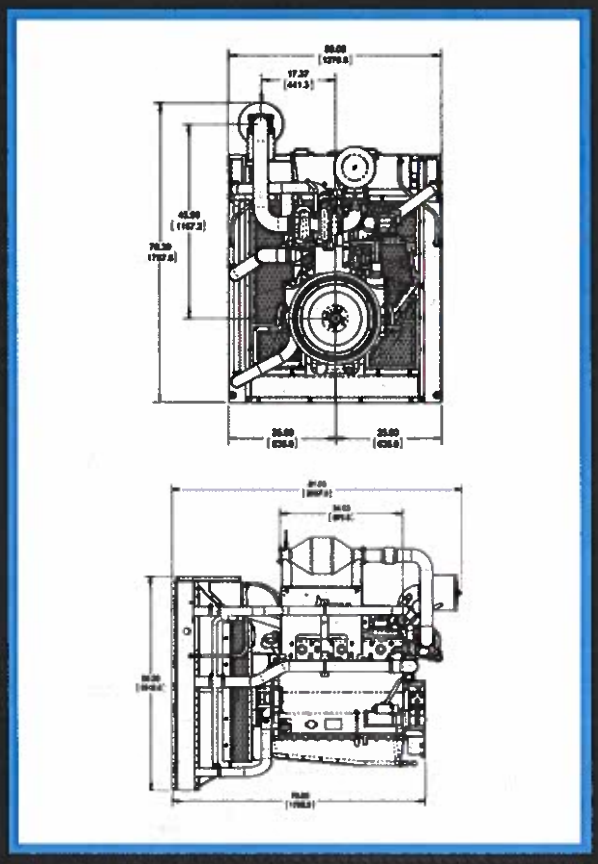

GENERAL DATA

- Water-cooled, turbo-charged, air-to-air inter-cooled, stoichiometric, replaceable wet cylinder liners
- Cast iron block & heads, 10.5:1 compression ratio, overhead valve/2V configuration
- Crankshaft gear-driven oil system with cartridge-type filter, belt-driven centrifugal water pump
- Full ECU engine control including: coil-on-plug variable timing ignition, electronic governor and fuel-air ratio control
- Engine protection for oil pressure, coolant level, coolant temperature, fuel pressure, over-speed
- Complete fuel system for single fuel (NG/LP) operation with closed-loop control
- Alternator (45A/24VDC)
- Starter (24VDC)
- CANBUS J1939 interface

Power shown is gross engine power and has been corrected to SAE J1995. Actual installed power levels may vary depending on the application and OEM supplied components.

Information may vary with application. All specifications listed are based on the latest product information available at the time of publication. The right is reserved to make changes at any time without notice.

201 Mittel Drive, Wood Dale, IL 60191
T: 630-350-9400 F: 630-350-9900
www.psiengines.com

STAMFORD®

UCDI274J - Winding 311 Single Phase

Technical Data Sheet

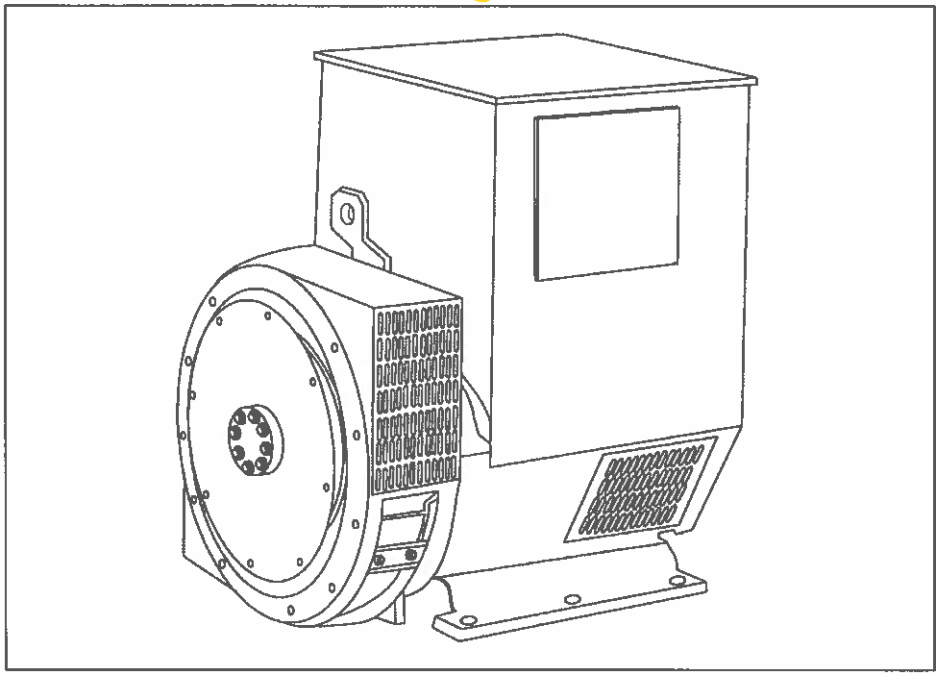

REGULAR SESSION CITY COUNCIL MEETING PACKET FOR THE MEETING TO BE HELD ON SEPTEMBER 20, 2021

SPECIFICATIONS & OPTIONS

STANDARDS

Stamford industrial generators meet the requirements of BS EN 60034 and the relevant section of other international standards such as BS5000, VDE 0530, NEMA MG1-32, IEC34, CSA C22.2-100, AS1359.
Other standards and certifications can be considered on request.

VOLTAGE REGULATORS

SX460 AVR - STANDARD

With this self excited control system the main stator supplies power via the Automatic Voltage Regulator (AVR) to the exciter stator. The high efficiency semiconductors of the AVR ensure positive build-up from initial low levels of residual voltage.
The exciter rotor output is fed to the main rotor through a three phase full wave bridge rectifier. This rectifier is protected by a surge suppressor against surges caused, for example, by short circuit.

AS440 AVR

With this self-excited system the main stator provides power via the AVR to the exciter stator. The high efficiency semi-conductors of the AVR ensure positive build-up from initial low levels of residual voltage.
The exciter rotor output is fed to the main rotor through a three-phase full-wave bridge rectifier. The rectifier is protected by a surge suppressor against surges caused, for example, by short circuit or out-of-phase paralleling.
The AS440 will support a range of electronic accessories, including a 'droop' Current Transformer (CT) to permit parallel operation with other ac generators.

MX341 AVR

This sophisticated AVR is incorporated into the Stamford Permanent Magnet Generator (PMG) control system.
The PMG provides power via the AVR to the main exciter, giving a source of constant excitation power independent of generator output. The main exciter output is then fed to the main rotor, through a full wave bridge, protected by a surge suppressor. The AVR has in-built protection against sustained over-excitation, caused by internal or external faults. This de-excites the machine after a minimum of 5 seconds.
An engine relief load acceptance feature can enable full load to be applied to the generator in a single step.

MX321 AVR

The most sophisticated of all our AVRs combines all the features of the MX341 with, additionally, over voltage protection built-in and short circuit current level adjustments as an optional facility.

WINDINGS & ELECTRICAL PERFORMANCE

All generator stators are wound to 2/3 pitch. This eliminates triplen (3rd, 9th, 15th ...) harmonics on the voltage waveform and is found to be the optimum design for trouble-free supply of non-linear loads. The 2/3 pitch design avoids excessive neutral currents sometimes seen with higher winding pitches, when in parallel with the mains. A fully connected damper winding reduces oscillations during paralleling. This winding, with the 2/3 pitch and carefully selected pole and tooth designs, ensures very low waveform distortion.

TERMINALS & TERMINAL BOX

Standard generators are reconnectable with 12 ends brought out to the terminals, which are mounted on a cover at the non-drive end of the generator. A sheet steel terminal box contains the AVR and provides ample space for the customers' wiring and gland arrangements. It has removable panels for easy access.

SHAFT & KEYS

All generator rotors are dynamically balanced to better than BS6861:Part 1 Grade 2.5 for minimum vibration in operation. Two bearing generators are balanced with a half key.

INSULATION/IMPREGNATION

The insulation system is class 'H'.
All wound components are impregnated with materials and processes designed specifically to provide the high build required for static windings and the high mechanical strength required for rotating components.

QUALITY ASSURANCE

Generators are manufactured using production procedures having a quality assurance level to BS EN ISO 9001.

The stated voltage regulation may not be maintained in the presence of certain radio transmitted signals. Any change in performance will fall within the limits of Criteria 'B' of EN 61000-6-2:2001. At no time will the steady-state voltage regulation exceed 2%.

DE RATES

All values tabulated on page 8 are subject to the following reductions

5% when air inlet filters are fitted.
3% for every 500 metres by which the operating altitude exceeds 1000 metres above mean sea level.
3% for every 5 C by which the operational ambient temperature exceeds 40 C.
Note: Requirement for operating in an ambient exceeding 60 C must be referred to the factory.

NB Continuous development of our products entitles us to change specification details without notice, therefore they must not be regarded as binding.

Front cover drawing typical of product range.

APPROVED DOCUMENT

REGULAR SESSION CITY COUNCIL MEETING PACKET FOR THE MEETING TO BE HELD ON SEPTEMBER 20, 2021

UCDI274J

STAMFORD

WINDING 311 Single Phase

CONTROL SYSTEM	SEPARATELY EXCITED BY P.M.G.		
A.V.R.	MX321	MX341	
VOLTAGE REGULATION	± 0.5 %	± 1.0 %	With 4% ENGINE GOVERNING
SUSTAINED SHORT CIRCUIT	REFER TO SHORT CIRCUIT DECREMENT CURVES (page 7)		

CONTROL SYSTEM	SELF EXCITED		
A.V.R.	SX460	AS440	
VOLTAGE REGULATION	± 1.0 %	± 1.0 %	With 4% ENGINE GOVERNING
SUSTAINED SHORT CIRCUIT	SERIES 4 CONTROL DOES NOT SUSTAIN A SHORT CIRCUIT CURRENT		

INSULATION SYSTEM	CLASS H					
PROTECTION	IP23					
RATED POWER FACTOR	0.8					
STATOR WINDING	DOUBLE LAYER CONCENTRIC					
WINDING PITCH	TWO THIRDS					
WINDING LEADS	12					
STATOR WDG. RESISTANCE	0.008 Ohms AT 22°C DOUBLE DELTA CONNECTED					
ROTOR WDG. RESISTANCE	2.08 Ohms at 22°C					
EXCITER STATOR RESISTANCE	20 Ohms at 22°C					
EXCITER ROTOR RESISTANCE	0.091 Ohms PER PHASE AT 22°C					
R.F.I. SUPPRESSION	BS EN 61000-6-2 & BS EN 61000-6-4,VDE 0875G, VDE 0875N. refer to factory for others					
WAVEFORM DISTORTION	NO LOAD < 1.5% NON-DISTORTING LINEAR LOAD < 5.0%					
MAXIMUM OVERSPEED	2250 Rev/Min					
BEARING DRIVE END	BALL. 6315-2RS (ISO)					
WEIGHT COMP. GENERATOR	727 kg					
WEIGHT WOUND STATOR	304 kg					
WEIGHT WOUND ROTOR	271.9 kg					
WR² INERTIA	2.3744 kgm²					
SHIPPING WEIGHTS in a crate	740 kg					
PACKING CRATE SIZE	123 x 67 x 103(cm)					
	50 Hz			60 Hz		
TELEPHONE INTERFERENCE	THF<2%			TIF<50		
COOLING AIR	0.58 m³/sec 1230 cfm			0.69 m³/sec 1463 cfm		
VOLTAGE DOUBLE DELTA	220/110	230/115	240/120	220/110	230/115	240/120
VOLTAGE PARALLEL DELTA	110	115	120	110	115	120
kVA BASE RATING FOR REACTANCE VALUES	138	138	138	150	157	161
Xd DIR. AXIS SYNCHRONOUS	1.73	1.59	1.46	2.63	2.52	2.37
X'd DIR. AXIS TRANSIENT	0.09	0.08	0.08	0.16	0.16	0.15
X"d DIR. AXIS SUBTRANSIENT	0.06	0.06	0.05	0.10	0.09	0.09
Xq QUAD. AXIS REACTANCE	0.79	0.72	0.67	1.20	1.14	1.08
X"q QUAD. AXIS SUBTRANSIENT	0.15	0.13	0.12	0.14	0.13	0.12
X_L LEAKAGE REACTANCE	0.06	0.05	0.05	0.08	0.08	0.07
X_2 NEGATIVE SEQUENCE	0.10	0.10	0.09	0.12	0.11	0.11
X_0 ZERO SEQUENCE	0.04	0.04	0.03	0.05	0.05	0.04
REACTANCES ARE SATURATED	VALUES ARE PER UNIT AT RATING AND VOLTAGE INDICATED					
T'd TRANSIENT TIME CONST.	0.045 s					
T"d SUB-TRANSTIME CONST.	0.015 s					
T'do O.C. FIELD TIME CONST.	1.27 s					
Ta ARMATURE TIME CONST.	0.03 s					
SHORT CIRCUIT RATIO	1/Xd					

AFFECTED DOCUMENT

REGULAR SESSION CITY COUNCIL MEETING PACKET FOR THE MEETING TO BE HELD ON SEPTEMBER 20, 2021

50 Hz

UCDI274J

Winding 311 Single Phase

STAMFORD

SINGLE PHASE EFFICIENCY CURVES

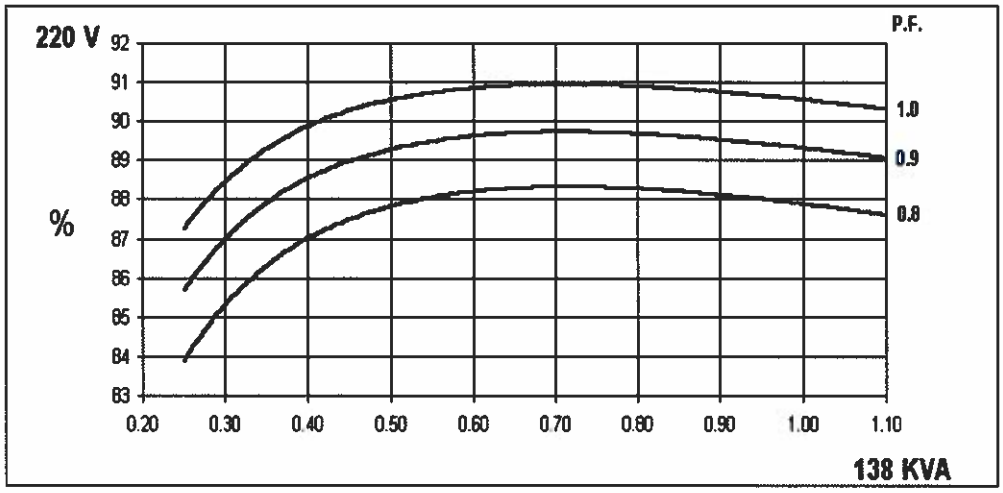

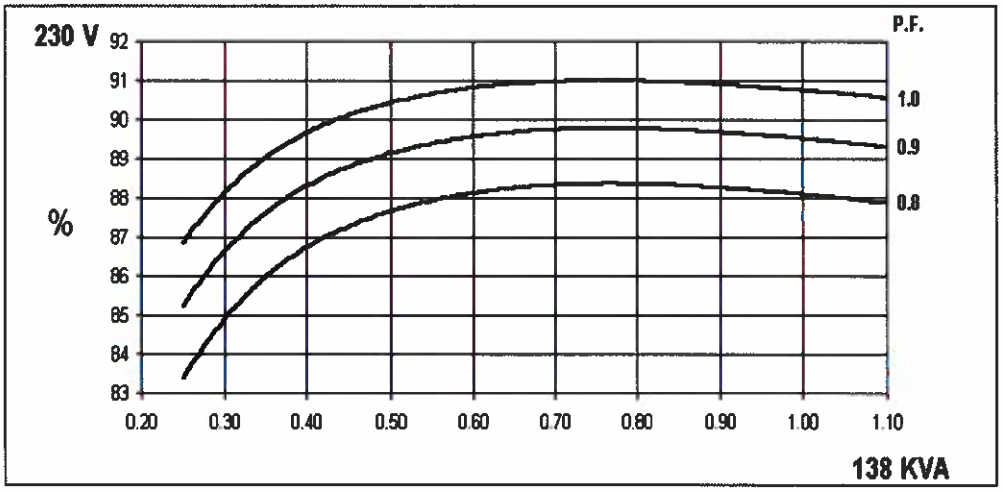

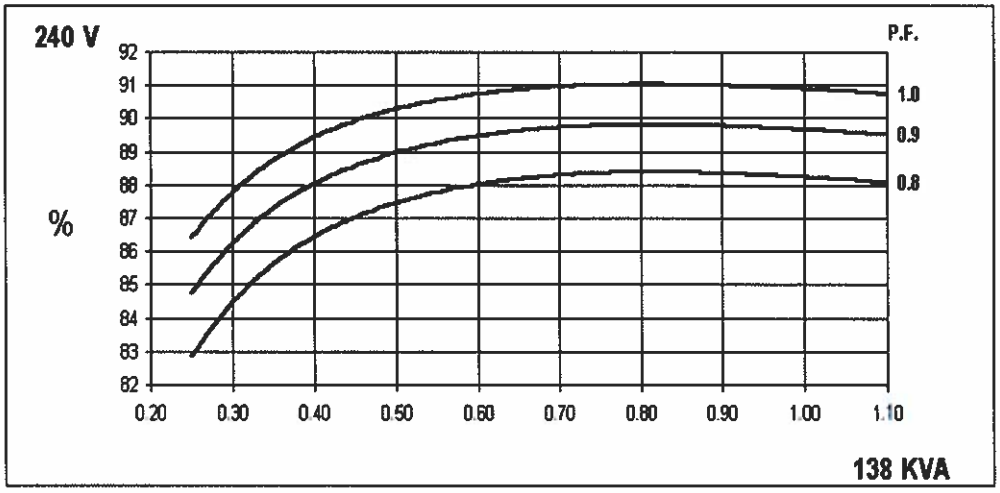

REGULAR SESSION CITY COUNCIL MEETING PACKET FOR THE MEETING TO BE HELD ON SEPTEMBER 20, 2021

60 Hz

UCDI274J

STAMFORD

Winding 311 Single Phase

SINGLE PHASE EFFICIENCY CURVES

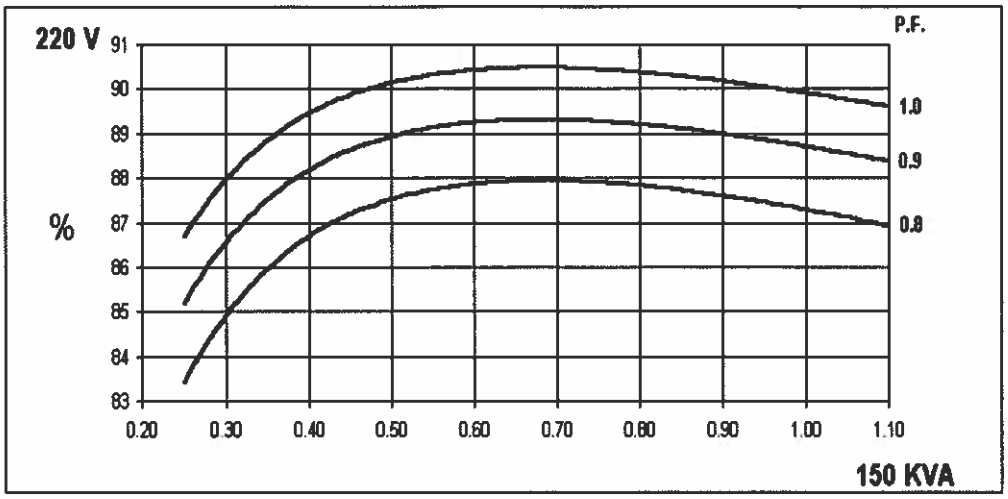

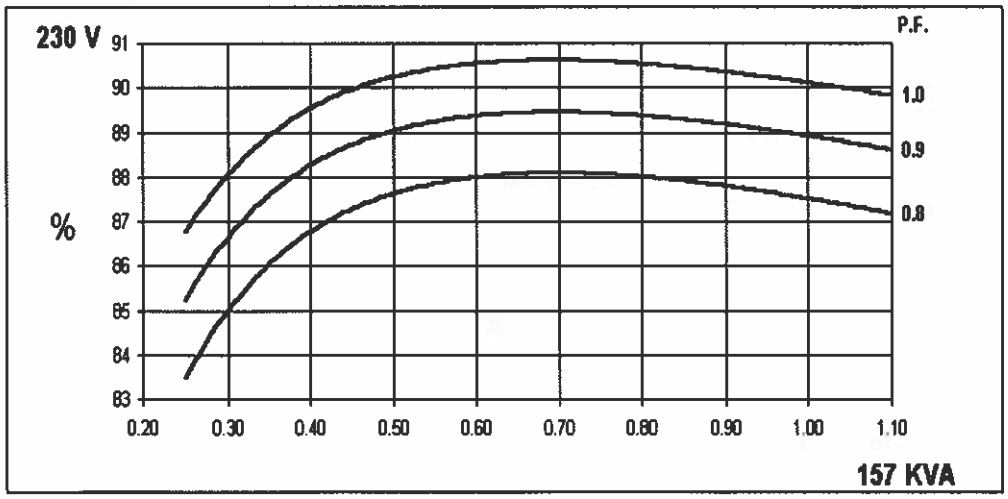

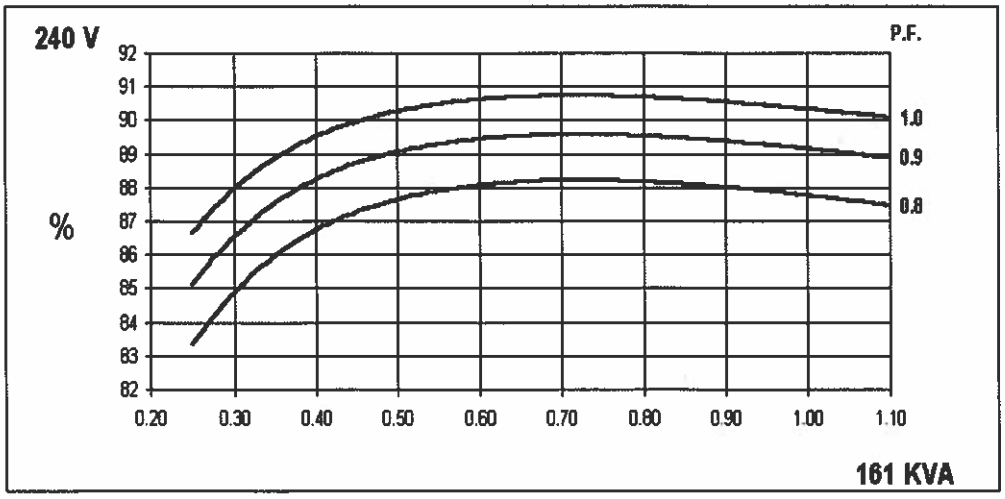

REGULAR SESSION CITY COUNCIL MEETING PACKET FOR THE MEETING TO BE HELD ON SEPTEMBER 20, 2021

UCDI274J

STAMFORD

Winding 311 Single Phase

Locked Rotor Motor Starting Curve

50 Hz

MX

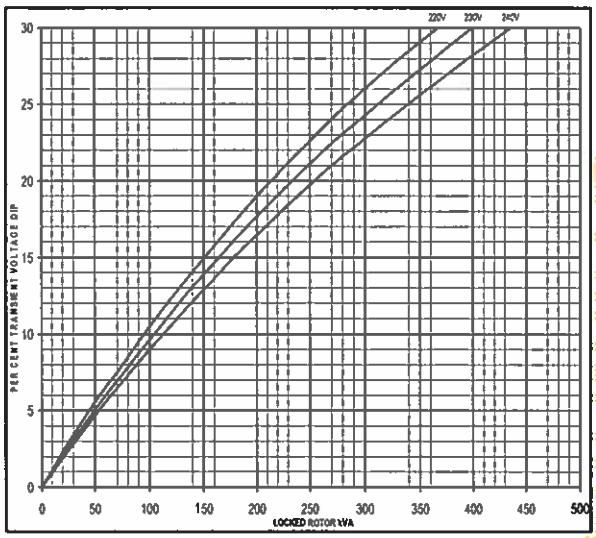

SX

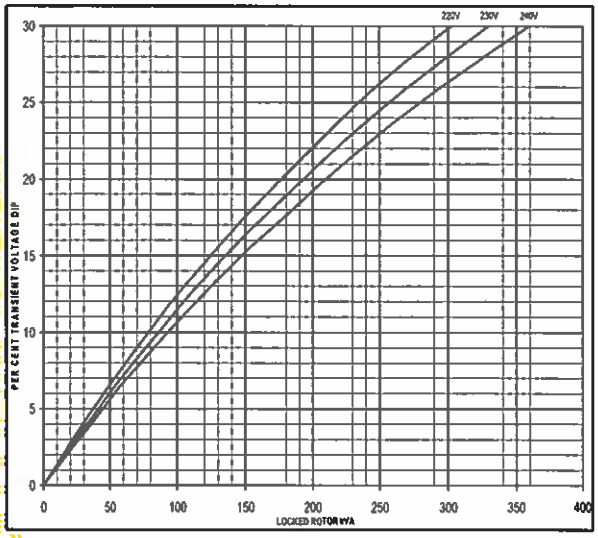

60 Hz

MX

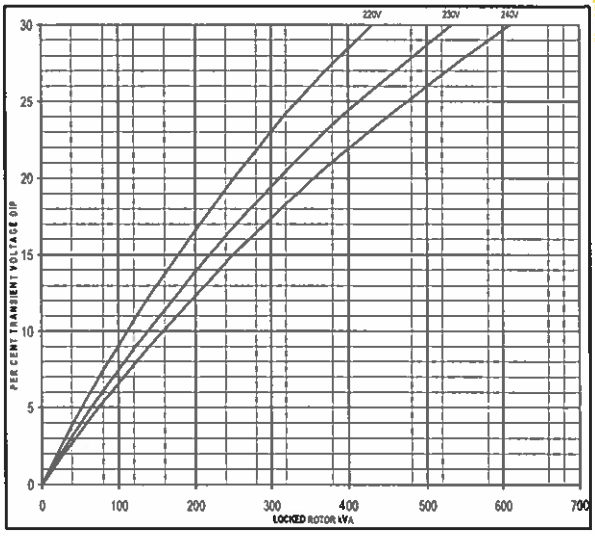

SX

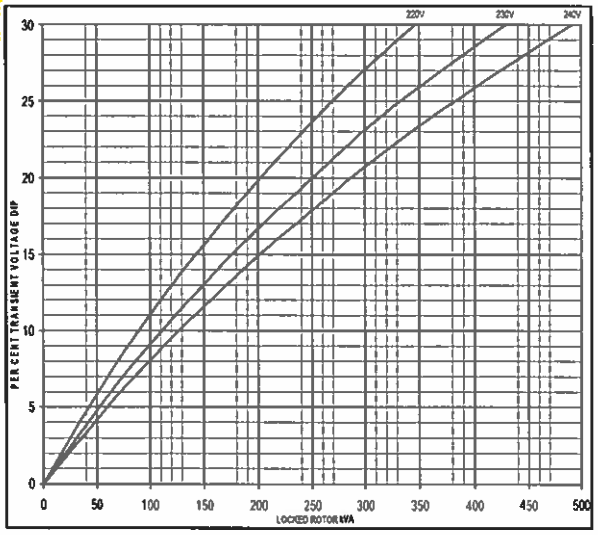

DOCUMENT

REGULAR SESSION CITY COUNCIL MEETING PACKET FOR THE MEETING TO BE HELD ON SEPTEMBER 20, 2021

UCDI274J

STAMFORD

Winding 311 Single Phase

Single Phase Short Circuit Decrement Curve. No-load Excitation at Rated Speed

Based on Double Delta connection.

50 Hz

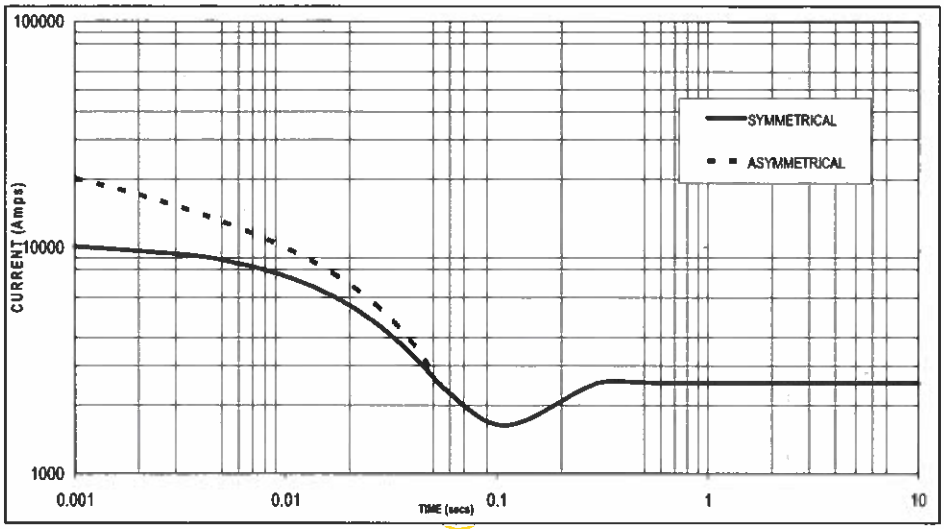

Sustained Short Circuit = 2510 Amps

60 Hz

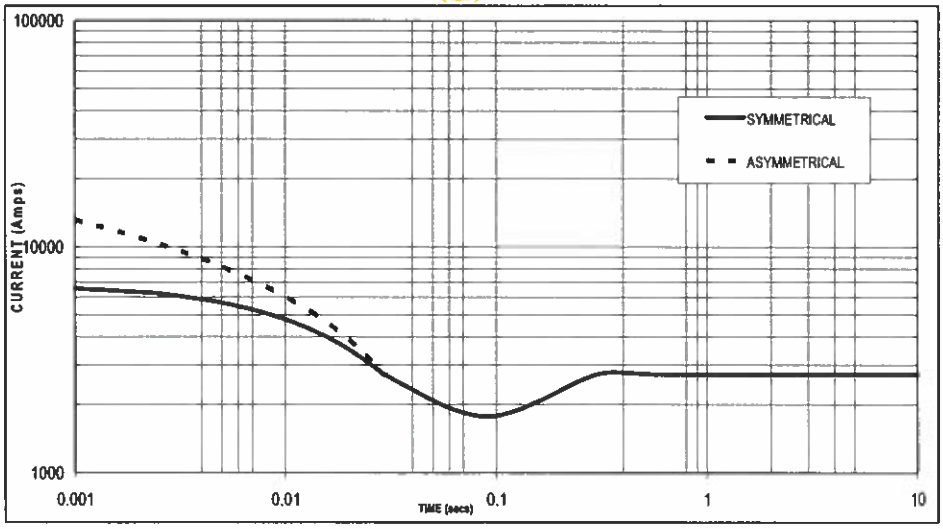

Sustained Short Circuit = 2730 Amps

Note

The following multiplication factors should be used to adjust the values from curve between time 0.001 seconds and the minimum current point in respect of nominal operating voltage :

Voltage	Factor
220V	X 1.00
230V	X 1.05
240V	X 1.09

The sustained current value is constant irrespective of voltage level

REGULAR SESSION CITY COUNCIL MEETING PACKET FOR THE MEETING TO BE HELD ON SEPTEMBER 20, 2021

UCDI274J

STAMFORD

Winding 311 Single Phase

RATINGS

	Class - Temp Rise	Cont. F - 105/40°C 0.8pf			Cont. H - 125/40°C 0.8pf			Cont. F - 105/40°C 1.0pf			Cont. H - 125/40°C 1.0pf		
50	Double Delta (V)	220	230	240	220	230	240	220	230	240	220	230	240
	Parallel Delta (V)	110	115	120	110	115	120	110	115	120	110	115	120
	kVA	126.0	126.0	126.0	138.0	138.0	138.0	126.0	126.0	126.0	138.0	138.0	138.0
	kW	100.8	100.8	100.8	110.4	110.4	110.4	126.0	126.0	126.0	138.0	138.0	138.0
	Efficiency (%)	88.1	88.2	88.3	87.9	88.1	88.2	90.7	90.9	91.0	90.6	90.8	90.9
	kW Input	114.4	114.3	114.2	125.6	125.3	125.2	138.9	138.6	138.5	152.3	152.0	151.8

	Class - Temp Rise	Cont. F - 105/40°C 0.8pf			Cont. H - 125/40°C 0.8pf			Cont. F - 105/40°C 1.0pf			Cont. H - 125/40°C 1.0pf		
60	Double Delta (V)	220	230	240	220	230	240	220	230	240	220	230	240
	Parallel Delta (V)	110	115	120	110	115	120	110	115	120	110	115	120
	kVA	135.0	145.0	150.0	150.0	157.0	161.0	135.0	145.0	150.0	150.0	157.0	161.0
	kW	108.0	116.0	120.0	120.0	125.6	128.8	135.0	145.0	150.0	150.0	157.0	161.0
	Efficiency (%)	87.6	87.7	87.9	87.3	87.5	87.8	90.2	90.3	90.5	89.9	90.1	90.3
	kW Input	123.3	132.3	136.5	137.5	143.5	146.7	149.7	160.6	165.7	166.9	174.3	178.3

APPROVED DOCUMENT

DIMENSIONS

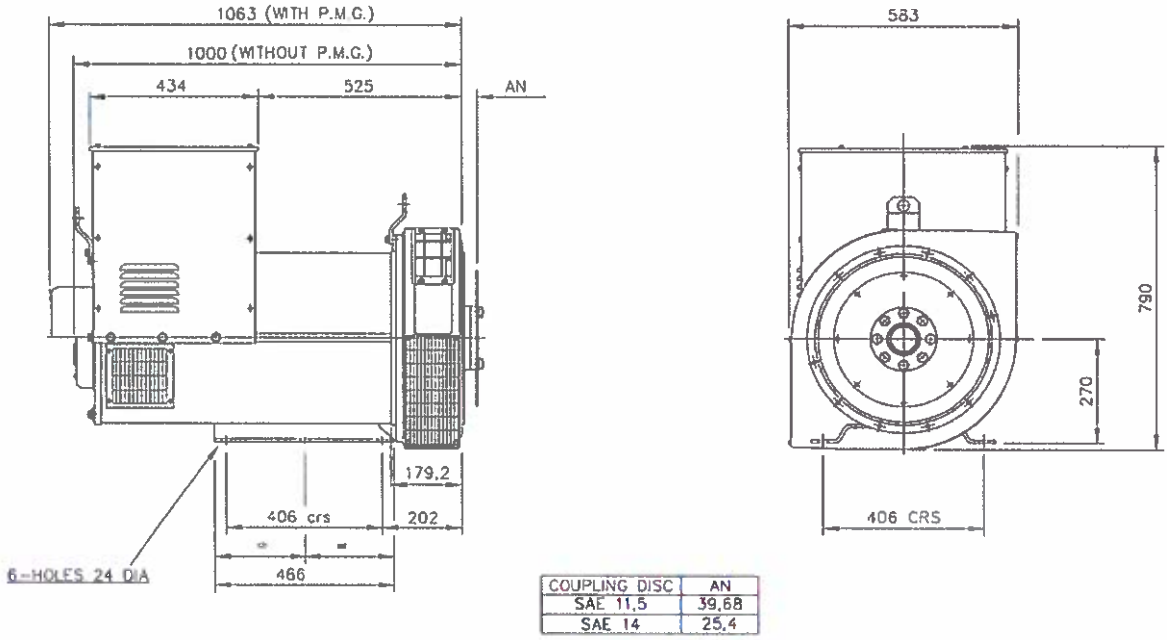

COUPLING DISC	AN
SAE 11,5	39,68
SAE 14	25,4

REGULAR SESSION CITY COUNCIL MEETING PACKET FOR THE MEETING TO BE HELD ON SEPTEMBER 20, 2021

REGULAR SESSION CITY COUNCIL MEETING PACKET FOR THE MEETING TO BE HELD ON SEPTEMBER 20, 2021

APPROVED DOCUMENT

STAMFORD

Head Office Address:
Barnack Road, Stamford
Lincolnshire, PE9 2NB
United Kingdom
Tel: +44 (0) 1780 484000
Fax: +44 (0) 1780 484100

www.cumminsgeneratortechnologies.com

Copyright 2010, Cummins Generator Technologies Ltd, All Rights Reserved
Stamford and AvK are registered trade marks of Cummins Generator Technologies Ltd
Cummins and the Cummins logo are registered trade marks of Cummins Inc.

APPROVED DOCUMENT

STAMFORD®

UCI274H - Winding 17

Technical Data Sheet

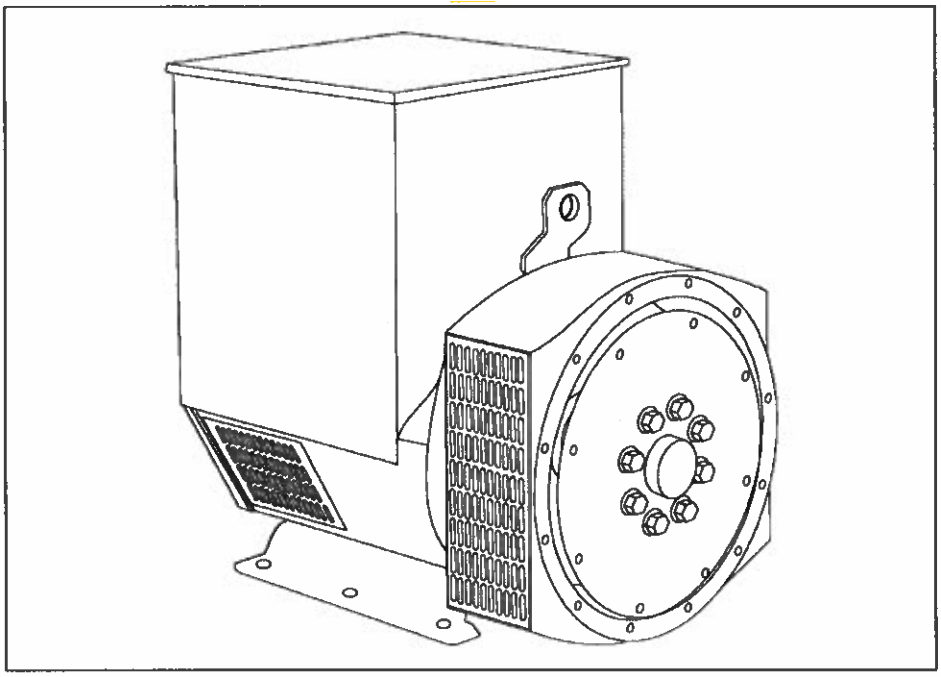

REGULAR SESSION CITY COUNCIL MEETING PACKET FOR THE MEETING TO BE HELD ON SEPTEMBER 20, 2021

SPECIFICATIONS & OPTIONS

STANDARDS

Stamford industrial generators meet the requirements of BS EN 60034 and the relevant section of other international standards such as BS5000, VDE 0530, NEMA MG1-32, IEC34, CSA C22.2-100, AS1359.
Other standards and certifications can be considered on request.

VOLTAGE REGULATORS

SX460 AVR - STANDARD

With this self excited control system the main stator supplies power via the Automatic Voltage Regulator (AVR) to the exciter stator. The high efficiency semiconductors of the AVR ensure positive build-up from initial low levels of residual voltage.
The exciter rotor output is fed to the main rotor through a three phase full wave bridge rectifier. This rectifier is protected by a surge suppressor against surges caused, for example, by short circuit.

AS440 AVR

With this self-excited system the main stator provides power via the AVR to the exciter stator. The high efficiency semi-conductors of the AVR ensure positive build-up from initial low levels of residual voltage.
The exciter rotor output is fed to the main rotor through a three-phase full-wave bridge rectifier. The rectifier is protected by a surge suppressor against surges caused, for example, by short circuit or out-of-phase paralleling.
The AS440 will support a range of electronic accessories, including a 'droop' Current Transformer (CT) to permit parallel operation with other ac generators.

MX341 AVR

This sophisticated AVR is incorporated into the Stamford Permanent Magnet Generator (PMG) control system.
The PMG provides power via the AVR to the main exciter, giving a source of constant excitation power independent of generator output. The main exciter output is then fed to the main rotor, through a full wave bridge, protected by a surge suppressor. The AVR has in-built protection against sustained over-excitation, caused by internal or external faults. This de-excites the machine after a minimum of 5 seconds.
An engine relief load acceptance feature can enable full load to be applied to the generator in a single step.
If three-phase sensing is required with the PMG system the MX321 AVR must be used.
We recommend three-phase sensing for applications with greatly unbalanced or highly non-linear loads.

MX321 AVR

The most sophisticated of all our AVRs combines all the features of the MX341 with, additionally, three-phase rms sensing, for improved regulation and performance.
Over voltage protection is built-in and short circuit current level adjustments is an optional facility.

WINDINGS & ELECTRICAL PERFORMANCE

All generator stators are wound to 2/3 pitch. This eliminates triplen (3rd, 9th, 15th ...) harmonics on the voltage waveform and is found to be the optimum design for trouble-free supply of non-linear loads. The 2/3 pitch design avoids excessive neutral currents sometimes seen with higher winding pitches, when in parallel with the mains. A fully connected damper winding reduces oscillations during paralleling. This winding, with the 2/3 pitch and carefully selected pole and tooth designs, ensures very low waveform distortion.

TERMINALS & TERMINAL BOX

Standard generators are 3-phase reconnectable with 12 ends brought out to the terminals, which are mounted on a cover at the non-drive end of the generator. A sheet steel terminal box contains the AVR and provides ample space for the customers' wiring and gland arrangements. It has removable panels for easy access.

SHAFT & KEYS

All generator rotors are dynamically balanced to better than BS6861:Part 1 Grade 2.5 for minimum vibration in operation.

INSULATION/IMPREGNATION

The insulation system is class 'H'.
All wound components are impregnated with materials and processes designed specifically to provide the high build required for static windings and the high mechanical strength required for rotating components.

QUALITY ASSURANCE

Generators are manufactured using production procedures having a quality assurance level to BS EN ISO 9001.

The stated voltage regulation may not be maintained in the presence of certain radio transmitted signals. Any change in performance will fall within the limits of Criteria 'B' of EN 61000-6-2:2001. At no time will the steady-state voltage regulation exceed 2%.

DE RATES

All values tabulated on page 6 are subject to the following reductions

5% when air inlet filters are fitted.
3% for every 500 metres by which the operating altitude exceeds 1000 metres above mean sea level.
3% for every 5 C by which the operational ambient temperature exceeds 40 C.
Note: Requirement for operating in an ambient exceeding 60 C must be referred to the factory.

NB Continuous development of our products entitles us to change specification details without notice, therefore they must not be regarded as binding.

Front cover drawing typical of product range.

APPROVED DOCUMENT

REGULAR SESSION CITY COUNCIL MEETING PACKET FOR THE MEETING TO BE HELD ON SEPTEMBER 20, 2021

REGULAR SESSION CITY COUNCIL MEETING PACKET FOR THE MEETING TO BE HELD ON SEPTEMBER 20, 2021

UCI274H

STAMFORD

WINDING 17

CONTROL SYSTEM	SEPARATELY EXCITED BY P.M.G.		
A.V.R.	MX321	MX341	
VOLTAGE REGULATION	± 0.5 %	± 1.0 %	With 4% ENGINE GOVERNING
SUSTAINED SHORT CIRCUIT	REFER TO SHORT CIRCUIT DECREMENT CURVES (page 5)		

CONTROL SYSTEM	SELF EXCITED		
A.V.R.	SX460	AS440	
VOLTAGE REGULATION	± 1.5 %	± 1.0 %	With 4% ENGINE GOVERNING
SUSTAINED SHORT CIRCUIT	SERIES 4 CONTROL DOES NOT SUSTAIN A SHORT CIRCUIT CURRENT		

INSULATION SYSTEM	CLASS H	
PROTECTION	IP23	
RATED POWER FACTOR	0.8	
STATOR WINDING	DOUBLE LAYER CONCENTRIC	
WINDING PITCH	TWO THIRDS	
WINDING LEADS	12	
STATOR WDG. RESISTANCE	0.028 Ohms PER PHASE AT 22°C SERIES STAR CONNECTED	
ROTOR WDG. RESISTANCE	1.82 Ohms at 22°C	
EXCITER STATOR RESISTANCE	20 Ohms at 22°C	
EXCITER ROTOR RESISTANCE	0.091 Ohms PER PHASE AT 22°C	
R.F.I. SUPPRESSION	BS EN 61000-6-2 & BS EN 61000-6-4,VDE 0875G, VDE 0875N. refer to factory for others	
WAVEFORM DISTORTION	NO LOAD < 1.5% NON-DISTORTING BALANCED LINEAR LOAD < 5.0%	
MAXIMUM OVERSPEED	2250 Rev/Min	
BEARING DRIVE END	BALL. 6315-2RS (ISO)	
BEARING NON-DRIVE END	BALL. 6310-2RS (ISO)	
	1 BEARING	2 BEARING
WEIGHT COMP. GENERATOR	626 kg	641 kg
WEIGHT WOUND STATOR	253 kg	253 kg
WEIGHT WOUND ROTOR	227.53 kg	216.57 kg
WR² INERTIA	1.9349 kgm²	1.8843 kgm²
SHIPPING WEIGHTS in a crate	659 kg	673 kg
PACKING CRATE SIZE	123 x 67 x 103(cm)	123 x 67 x 103(cm)
TELEPHONE INTERFERENCE	THF<2%	TIF<50
COOLING AIR	0.617 m³/sec 1308 cfm	
VOLTAGE SERIES STAR	600V	
VOLTAGE PARALLEL STAR	300V	
VOLTAGE SERIES DELTA	346V	
kVA BASE RATING FOR REACTANCE VALUES	255	
Xd DIR. AXIS SYNCHRONOUS	2.07	
X'd DIR. AXIS TRANSIENT	0.16	
X"d DIR. AXIS SUBTRANSIENT	0.11	
Xq QUAD. AXIS REACTANCE	1.26	
X"q QUAD. AXIS SUBTRANSIENT	0.17	
X_L LEAKAGE REACTANCE	0.08	
X_2 NEGATIVE SEQUENCE	0.13	
X_0 ZERO SEQUENCE	0.08	
REACTANCES ARE SATURATED	VALUES ARE PER UNIT AT RATING AND VOLTAGE INDICATED	
T'd TRANSIENT TIME CONST.	0.042s	
T"d SUB-TRANSTIME CONST.	0.012s	
T'do O.C. FIELD TIME CONST.	1.1s	
Ta ARMATURE TIME CONST.	0.012s	
SHORT CIRCUIT RATIO	1/Xd	

APPROVED DOCUMENT

UCI274H

STAMFORD

Winding 17

SX

Locked Rotor Motor Starting Curves

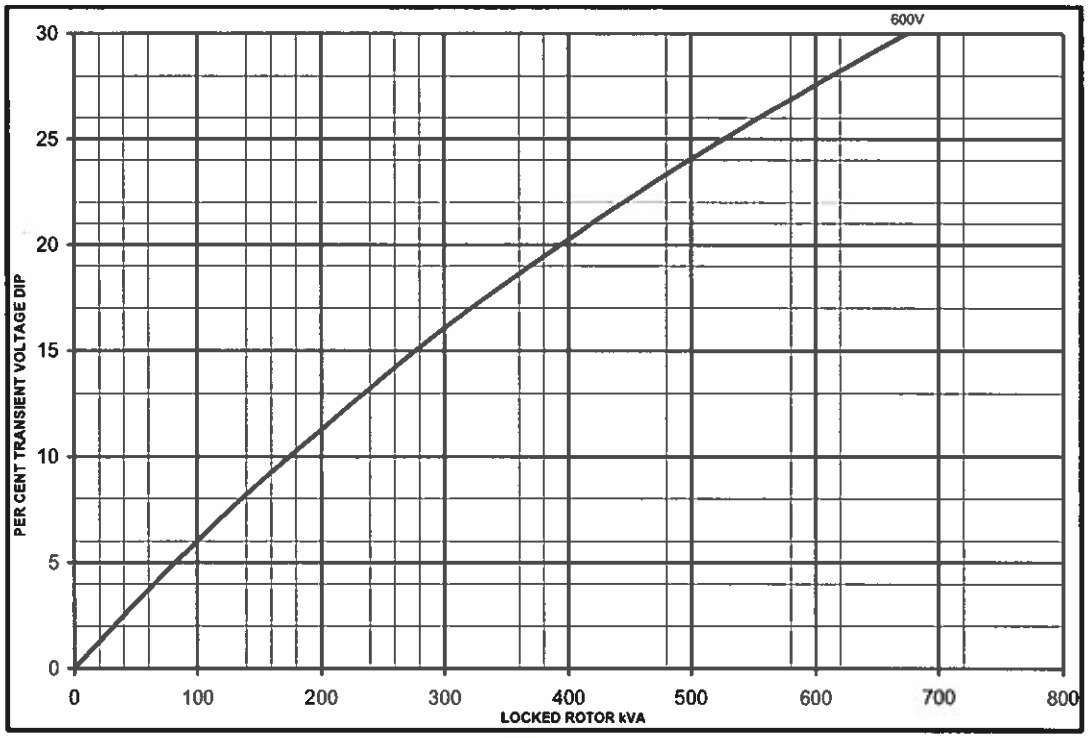

MX

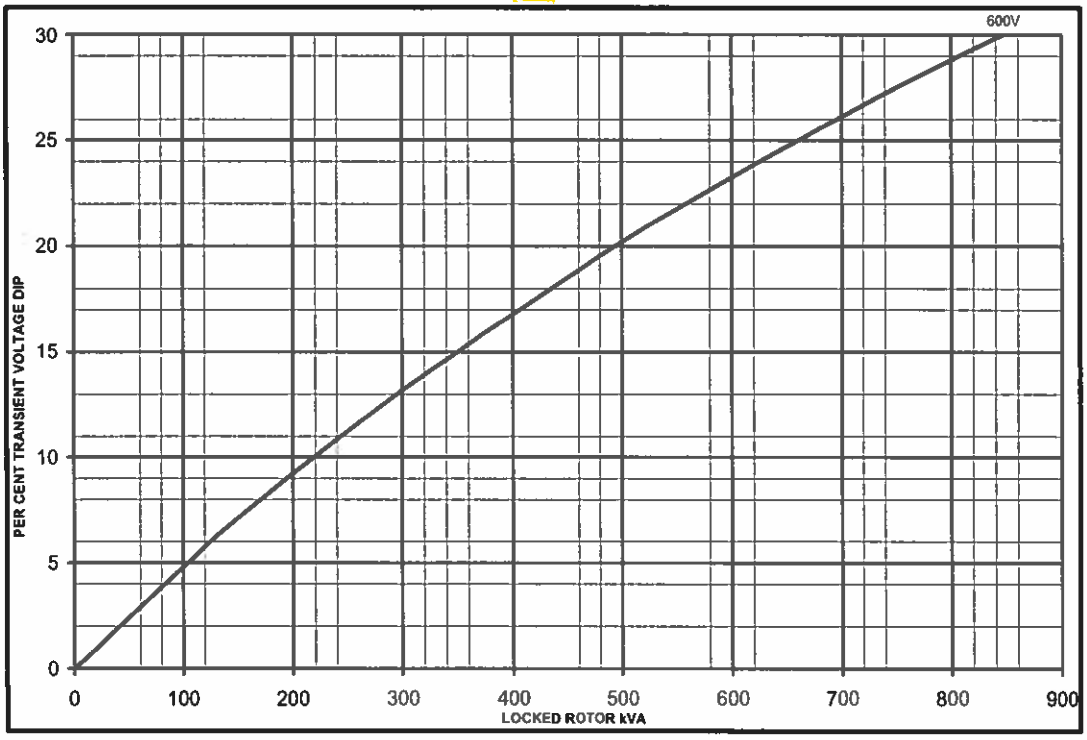

REGULAR SESSION CITY COUNCIL MEETING PACKET FOR THE MEETING TO BE HELD ON SEPTEMBER 20, 2021

UCI274H
Winding 17

STAMFORD

THREE PHASE EFFICIENCY CURVES

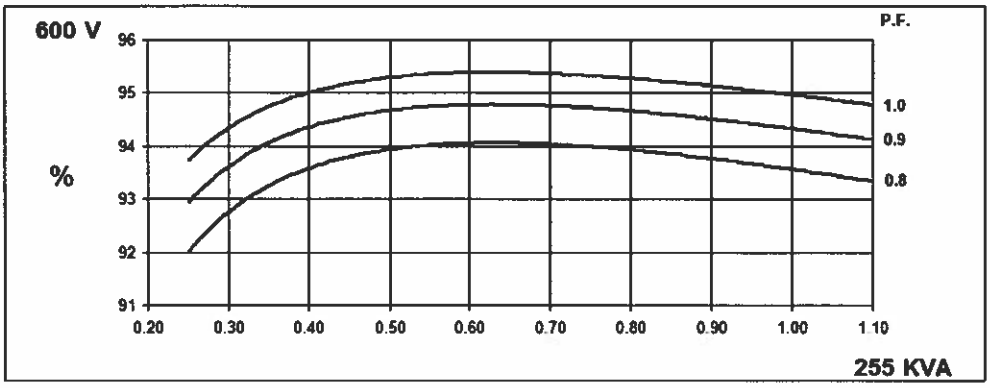

Three-phase Short Circuit Decrement Curve. No-load Excitation at Rated Speed
Based on star (wye) connection.

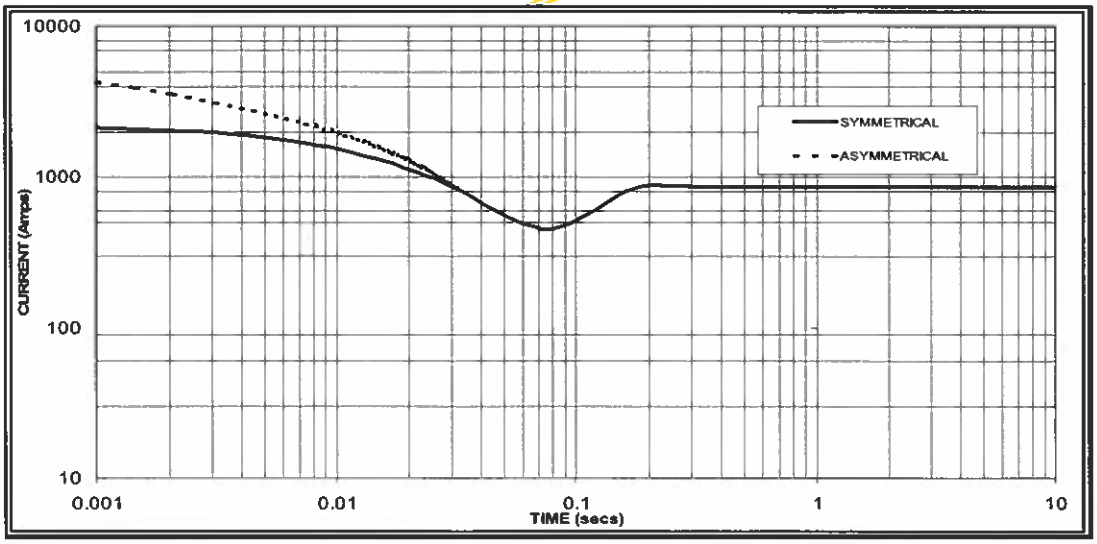

Sustained Short Circuit = 860 Amps

Note
The following multiplication factor should be used to convert the values from curve for the various types of short circuit :

	3-phase	2-phase L-L	1-phase L-N
Instantaneous	x 1.00	x 0.87	x 1.30
Minimum	x 1.00	x 1.80	x 3.20
Sustained	x 1.00	x 1.50	x 2.50
Max. sustained duration	10 sec.	5 sec.	2 sec.

All other times are unchanged

REGULAR SESSION CITY COUNCIL MEETING PACKET FOR THE MEETING TO BE HELD ON SEPTEMBER 20, 2021

UCI274H

STAMFORD

Winding 17 / 0.8 Power Factor

60Hz

RATINGS

Class - Temp Rise	Cont. F - 105/40°C	Cont. H - 125/40°C	Standby - 150/40°C	Standby - 163/27°C
Series Star (V)	600	600	600	600
Parallel Star (V)	300	300	300	300
Series Delta (V)	346	346	346	346
kVA	235.0	255.0	275.0	280.0
kW	188.0	204.0	220.0	224.0
Efficiency (%)	93.7	93.6	93.4	93.3
kW Input	200.6	218.0	235.6	240.0

APPROVED

DIMENSIONS

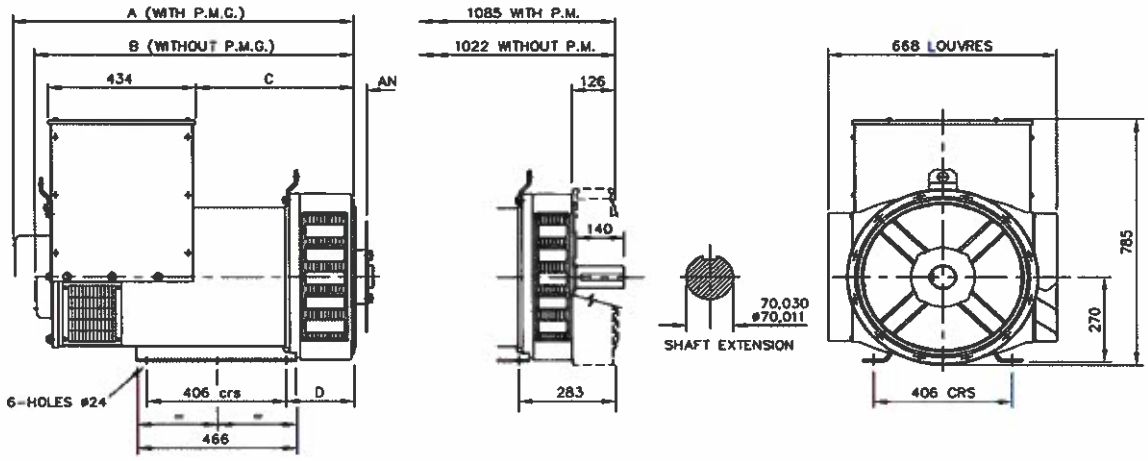

SINGLE BEARING MACHINES ONLY						
ADAPTOR	A	B	C	D	COUPLING DISCS	AN
SAE 1	1018,3	933,3	479,3	216,3	SAE 10	53,98
SAE 2	1004	941	465	202	SAE 11,5	39,68
SAE 3	1004	941	465	202	SAE 14	25,40

REGULAR SESSION CITY COUNCIL MEETING PACKET FOR THE MEETING TO BE HELD ON SEPTEMBER 20, 2021

REGULAR SESSION CITY COUNCIL MEETING PACKET FOR THE MEETING TO BE HELD ON SEPTEMBER 20, 2021

APPROVED DOCUMENT

STAMFORD

Head Office Address:
Barnack Road, Stamford
Lincolnshire, PE9 2NB
United Kingdom
Tel: +44 (0) 1780 484000
Fax: +44 (0) 1780 484100

www.cumminsgeneratortechnologies.com

Copyright 2010, Cummins Generator Technologies Ltd, All Rights Reserved
Stamford and AvK are registered trade marks of Cummins Generator Technologies Ltd
Cummins and the Cummins logo are registered trade marks of Cummins Inc.

DSEGenset

DSE

DSE7410/20

AUTO START & AUTO MAINS FAILURE MODULES

FEATURES

The DSE7410 is an Auto Start Control Module and the DSE7420 is an Auto Mains (Utility) Failure Control Module suitable for a wide variety of single, diesel or gas, gen-set applications.

A sophisticated module monitoring an extensive number of engine parameters, the DSE74xx will annunciate warnings, shutdown and engine status information on the back-lit LCD screen, illuminated LED, remote PC, audible alarm and via SMS text alerts. The module includes RS232, RS485 & Ethernet ports as well as dedicated terminals for system expansion.

The DSE7400 Series modules are compatible with electronic (CAN) and non-electronic (magnetic pick-up/alternator sensing) engines and offer a comprehensive number of flexible inputs, outputs and extensive engine protections so the system can be easily adapted to meet the most demanding industry paralleling requirements.

The modules can be easily configured using the DSE Configuration Suite Software. Selected front panel editing is also available.

ENVIRONMENTAL TESTING STANDARDS

ELECTRO-MAGNETIC COMPATIBILITY
BS EN 61000-6-2
EMC Generic Immunity Standard for the Industrial Environment
BS EN 61000-6-4
EMC Generic Emission Standard for the Industrial Environment

ELECTRICAL SAFETY
BS EN 60950
Safety of Information Technology Equipment, including Electrical Business Equipment

TEMPERATURE
BS EN 60068-2-1
Ab/Ae Cold Test -30 °C
BS EN 60068-2-2
Bb/Be Dry Heat +70 °C

VIBRATION
BS EN 60068-2-6
Ten sweeps in each of three major axes
5 Hz to 8 Hz @ +/-7.5 mm,
8 Hz to 500 Hz @ 2 gn

HUMIDITY
BS EN 60068-2-30
Db Damp Heat Cyclic 20/55 °C
@ 95% RH 48 Hours
BS EN 60068-2-78
Cab Damp Heat Static 40 °C
@ 93% RH 48 Hours

SHOCK
BS EN 60068-2-27
Three shocks in each of three major axes
15 gn in 11 mS

DEGREES OF PROTECTION PROVIDED BY ENCLOSURES
BS EN 60529
IP65 - Front of module when installed into the control panel with the supplied sealing gasket.

COMPREHENSIVE FEATURE LIST TO SUIT A WIDE VARIETY OF GEN-SET APPLICATIONS

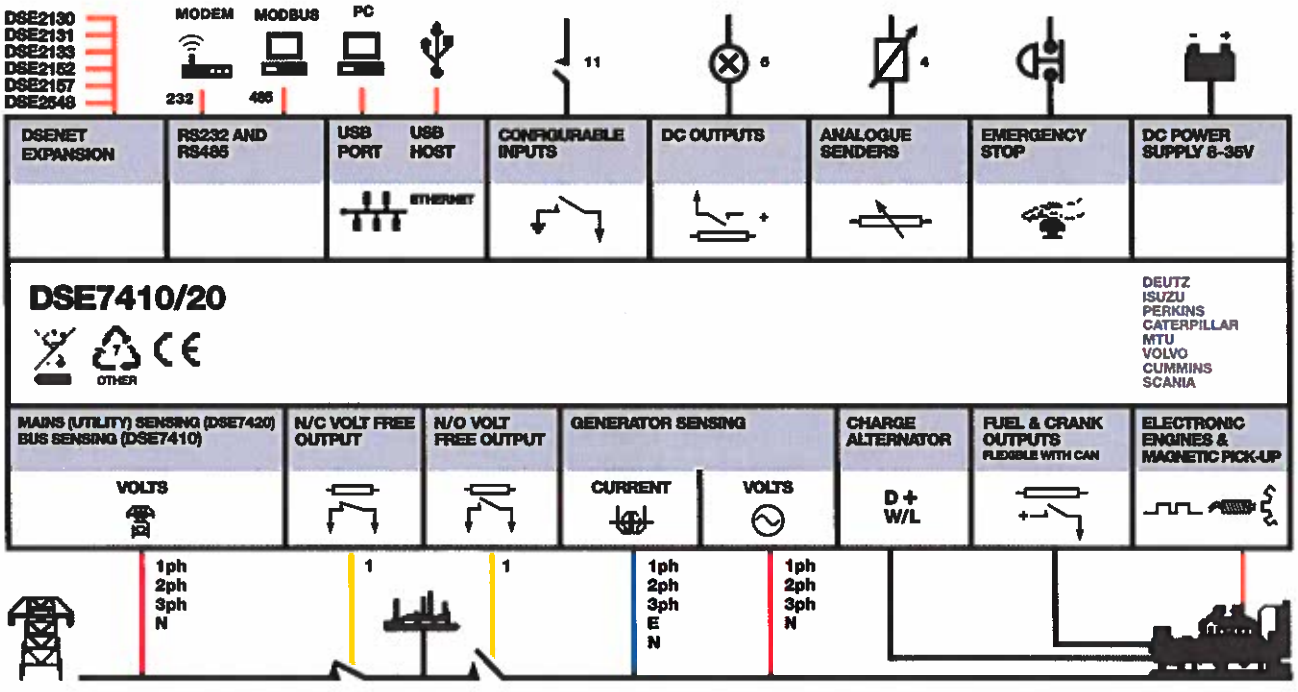

ISSUE 1

REGULAR SESSION CITY COUNCIL MEETING PACKET FOR THE MEETING TO BE HELD ON SEPTEMBER 20, 2021

DSEGenset

DSE

DSE7410/20

AUTO START & AUTO MAINS FAILURE MODULES

FEATURES

DSE7420



DSE7410



KEY FEATURES

- Configurable inputs (11)
- Configurable outputs (8)
- Voltage measurement
- Mains (utility) failure detection
- Dedicated load test button
- kW overload alarms
- Comprehensive electrical protection
- RS232, RS485 & Ethernet remote communications
- Modbus RTU/TCP
- PLC functionality
- Multi event exercise timer
- Back-lit LCD 4-line text display
- Multiple display languages
- Automatic start/Manual start
- Audible alarm
- Fixed and flexible LED indicators
- Event log (250)
- Engine protection
- Fault condition notification to a designated PC
- Front panel mounting
- Protected front panel programming
- Configurable alarms and timers
- Configurable start and stop timers
- Five key menu navigation
- Front panel editing with PIN protection
- 3 configurable maintenance alarms
- CAN and magnetic pick-up/Alt. sensing
- Fuel usage monitor and low fuel alarms
- Charge alternator failure alarm
- Manual speed control (on compatible CAN engines)
- Manual fuel pump control
- "Protections disabled" feature
- Reverse power protection
- Power monitoring (kW h, kV Ar, kV A h, kV Ar h)
- Load switching (load shedding and dummy load outputs)
- Automatic load transfer (DSE7420)
- Unbalanced load protection
- Independent earth fault trip
- Fully configurable via DSE Configuration Suite PC software
- Configurable display languages
- Remote SCADA monitoring via DSE Configuration Suite PC software
- Advanced SMS messaging (additional external modem required)
- Start & stop capability via SMS messaging
- Additional display screens to help with modem diagnostics
- DSENet® expansion
- Integral PLC editor

KEY BENEFITS

- RS232, RS485 & Ethernet can be used at the same time
- DSENet® connection for system expansion
- PLC functionality
- Five step dummy load support
- Five step load shedding support
- High number of inputs and outputs
- Worldwide language support
- Direct USB connection to PC
- Ethernet monitoring
- USB host
- Data logging & trending

SPECIFICATION

DC SUPPLY
CONTINUOUS VOLTAGE RATING
8 V to 35 V Continuous

CRANKING DROPOUTS
Able to survive 0 V for 50 mS, providing supply was at least 10 V before dropout and supply recovers to 5 V. This is achieved without the need for internal batteries

MAXIMUM OPERATING CURRENT
260 mA at 12 V, 130 mA at 24 V

MAXIMUM STANDBY CURRENT
120 mA at 12 V, 65 mA at 24 V

CHARGE FAIL/EXCITATION RANGE
0 V to 35 V

OUTPUTS
OUTPUT A (FUEL)
15 A DC at supply voltage

OUTPUT B (START)
15 A DC at supply voltage

OUTPUTS C & D
8 A AC at 250 V AC (Volt free)

AUXILIARY OUTPUTS E,F,G,H,I & J
2 A DC at supply voltage

GENERATOR
VOLTAGE RANGE
15 V to 333 V AC (L-N)

FREQUENCY RANGE
3.5 Hz to 75 Hz

MAINS (UTILITY) (DSE7420)
VOLTAGE RANGE
15 V to 333 V AC (L-N)

FREQUENCY RANGE
3.5 Hz to 75 Hz

BUS (DSE7410)
VOLTAGE RANGE
15 V to 333 V AC (L-N)

FREQUENCY RANGE
3.5 Hz to 75 Hz

MAGNETIC PICK UP
VOLTAGE RANGE
+/- 0.5 V to 70 V

FREQUENCY RANGE
10,000 Hz (max)

DIMENSIONS
OVERALL
240 mm x 172 mm x 57 mm
9.4" x 6.8" x 2.2"

PANEL CUTOUT
220 mm x 160 mm
8.7" x 6.3"

MAXIMUM PANEL THICKNESS
6 mm
0.3"

STORAGE TEMPERATURE RANGE
-40 °C to +85 °C

RELATED MATERIALS

TITLE	PART NO'S
DSE7410 Installation Instructions	053-085
DSE7420 Installation Instructions	053-088
DSE74xx Quick Start Guide	057-162
DSE74xx Operator Manual	057-161
DSE74xx PC Configuration Suite Manual	057-160

DEEP SEA ELECTRONICS PLC UK
Highfield House, Hunmanby Industrial Estate, Hunmanby YO14 0PH
TELEPHONE +44 (0) 1723 890099 **FACSIMILE** +44 (0) 1723 893303
EMAIL sales@deepseaplc.com **WEBSITE** www.deepseaplc.com

DEEP SEA ELECTRONICS INC USA
3230 Williams Avenue, Rockford, IL 61101-2668 USA
TELEPHONE +1 (815) 316 8706 **FACSIMILE** +1 (815) 316 8708
EMAIL sales@deepseausa.com **WEBSITE** www.deepseausa.com

Deep Sea Electronics Plc maintains a policy of continuous development and reserves the right to change the details shown on this data sheet without prior notice. The contents are intended for guidance only.

Registered in England & Wales No.01319649
VAT No.316923457

REGULAR SESSION CITY COUNCIL MEETING PACKET FOR THE MEETING TO BE HELD ON SEPTEMBER 20, 2021

Molded Case Circuit Breakers

Power Defense ™ UL Global Series

Part Number: PDG33G0400B2NJNNNNNN

Powering Business Worldwide

Datasheet creation date: 02/12/2019

PRODUCT VIEW *(Use Mouse to Rotate and Zoom)*

Eaton's Power Defense™ molded case circuit breakers, a globally rated platform designed to help keep your power system safe with latest protection technology. Engineered for the future: IoT and Industry 4.0 features such as built-in communications, advanced energy metering, and algorithms that signal breaker maintenance; zone selective interlock technology that clears faults quickly and locally; ArcFlash reduction options that help protect your people, and not to mention Eaton's best-inclass support and service.

Tech Data for Configured Product

Power Defense Catalog Number	PDG33G0400B2NJNNNNNN
Frame Size	Frame 3
Poles	3 Pole
Voltage	480V AC
Interruption or Breaking Capacity (Icu/Ics)	35kA
Continuous Current Rating (In)	400A
Trip Unit Type	PXR10
Trip Unit Options 1	LSI
Trip Unit Options 2	None
Indicating Accessories	None
Indicating Accessories Terminal	None
Tripping Accessories	None
Tripping Accessory Terminal	None
Tripping Accessory Voltage	None
Line Type Description	Option 1 - Standard Terminal
Line Conductor Options	(2) 3/0 - 250
Line Terminal Type	Aluminum
Load Type Description	Option 1 - Standard Terminal
Load Conductor Options	(2) 3/0 - 250
Load Terminal Type	Aluminum
Special Options - Type of Modification	None
Details	None
Additional Description	None

REGULAR SESSION CITY COUNCIL MEETING PACKET FOR THE MEETING TO BE HELD ON SEPTEMBER 20, 2021

Molded Case Circuit Breakers

Power Defense ™ UL Global Series

Part Number: PDG33G0400B2NJNNNNNN

Powering Business Worldwide

Datasheet creation date: 02/12/2019

Technical drawings

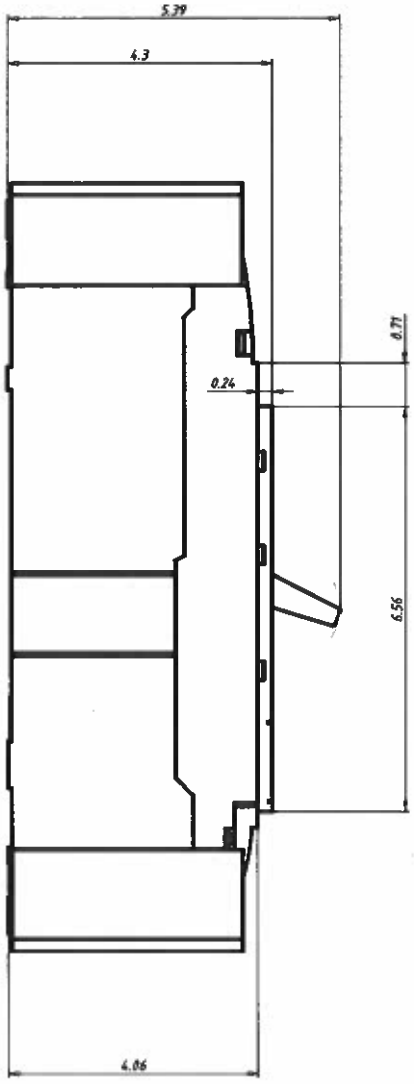

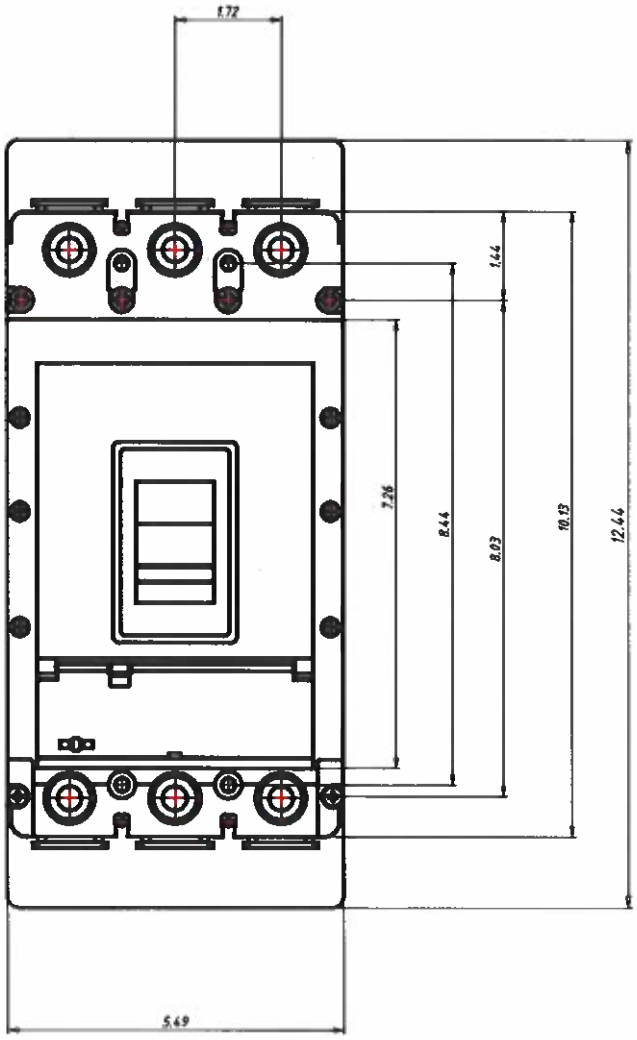

REGULAR SESSION CITY COUNCIL MEETING PACKET FOR THE MEETING TO BE HELD ON SEPTEMBER 20, 2021

Molded Case Circuit Breakers

Power Defense ™ UL Global Series

Part Number: PDG33G0400B2NJNNNNNN

Powering Business Worldwide

Datasheet creation date: 02/12/2019

General Technical Data

Frame Rating (In)	400A
Reference Standard	UL489, CSA 22.2, IEC 60947-2 & GB
Number of poles	3
Neutral rating	-
Interruption Rating Designator	F / G / K / M / N / P
UL Interruption Rating to UL 489 (240Vac)	35 / 65 / 85 / 100 / 150 / 200kA
UL Interruption Rating to UL 489 (480Vac)	25 / 35 / 50 / 65(a) / 85 / 100kA
UL Interruption Rating to UL 489 (600Vac)	14 / 18 / 25 / 35 / 50 / 65kA
UL Interruption Rating to UL 489 (125/250Vdc)	
UL Current Limiting	N / N / N / Y / Y / Y
Rated breaking capacity to IEC 60947-2 (220-240 Vac Icu)	35 / 55 / 85 / 100 / 150 / 200kA
Rated breaking capacity to IEC 60947-2 (220-240 Vac Ics)	35 / 55 / 85 / 100 / 100 / 150kA
Rated breaking capacity to IEC 60947-2 (380-415 Vac Icu)	25 / 36 / 50 / 70 / 70 / 100kA
Rated breaking capacity to IEC 60947-2 (380-415 Vac Ics)	25 / 36 / 50 / 53 / 70 / 70kA
Rated breaking capacity to IEC 60947-2 (440 Vac Icu)	25 / 30 / 35 / 50 / 70 / 100kA
Rated breaking capacity to IEC 60947-2 (440 Vac Ics)	20 / 22.5 / 35 / 40 / 50 / 50kA
Rated breaking capacity to IEC 60947-2 (525 Vac Icu)	18 / 20 / 25 / 30 / 35 / 40kA
Rated breaking capacity to IEC 60947-2 (525 Vac Ics)	5 / 7.5 / 10 / 15 / 25 / 25kA
Rated breaking capacity to IEC 60947-2 (690 Vac Icu)	- / 8 / 10 / 15 / 20 / 20kA
Rated breaking capacity to IEC 60947-2 (690 Vac Ics)	- / 4 / 5 /7. 5 / 10 / 10kA
Rated breaking capacity to IEC 60947-2 (125V DC Icu)	
Rated breaking capacity to IEC 60947-2 (250V DC 2P in series Ics)	10 / 10 / 10 / 22 / 22 / 22kA
Frequency	50/60Hz
Trip Unit Type	PXR10
Continuous Current Range	160 - 400A
100% UL489 Rated	Yes
Instantaneous/Short Circuit Range	2 - 10 In
Magnetic/Instantaneous Override	4400A
Dimensions H x W x D (inches)	10.125 x 5.47 x 4.297
Pole to pole distance inches	1,719
Approx Weight lbs	16
RoHS Compliance	Yes
UL File Number	E7819
Ambient Temp Calibration	
Derating at 50C	
Derating at 60C	
Derating at 70C	

1. 480Vac corresponds to 277Vac for 1P
2. 600Vac corresponds to 347Vac for 1P

REGULAR SESSION CITY COUNCIL MEETING PACKET FOR THE MEETING TO BE HELD ON SEPTEMBER 20, 2021

Molded Case Circuit Breakers

Power Defense ™ UL Global Series

Part Number: PDG43G0800B2NJNNNNNN

Powering Business Worldwide

Datasheet creation date: 20/11/2019

PRODUCT VIEW *(Use Mouse to Rotate and Zoom)*

Eaton's Power Defense™ molded case circuit breakers, a globally rated platform designed to help keep your power system safe with latest protection technology. Engineered for the future: IoT and Industry 4.0 features such as built-in communications, advanced energy metering, and algorithms that signal breaker maintenance; zone selective interlock technology that clears faults quickly and locally; ArcFlash reduction options that help protect your people, and not to mention Eaton's best-inclass support and service.

Tech Data for Configured Product

Power Defense Catalog Number	PDG43G0800B2NJNNNNNN
Frame Size	Frame 4
Poles	3 Pole
Voltage	240V AC
Interruption or Breaking Capacity (Icu/Ics)	55kA
Continuous Current Rating (In)	800A
Trip Unit Type	PXR10
Trip Unit Options 1	LSI
Trip Unit Options 2	None
Indicating Accessories	None
Indicating Accessories Terminal	None
Tripping Accessories	None
Tripping Accessory Terminal	None
Tripping Accessory Voltage	None
Line Type Description	Option 1 - Standard Terminal
Line Conductor Options	(3) 3/0 - 400
Line Terminal Type	Aluminum
Load Type Description	Option 1 - Standard Terminal
Load Conductor Options	(3) 3/0 - 400
Load Terminal Type	Aluminum
Special Options - Type of Modification	None
Details	None
Additional Description	None

REGULAR SESSION CITY COUNCIL MEETING PACKET FOR THE MEETING TO BE HELD ON SEPTEMBER 20, 2021

Molded Case Circuit Breakers

Power Defense ™ UL Global Series

Part Number: PDG43G0800B2NJNNNNNN

Powering Business Worldwide

Datasheet creation date: 20/11/2019

Technical drawings

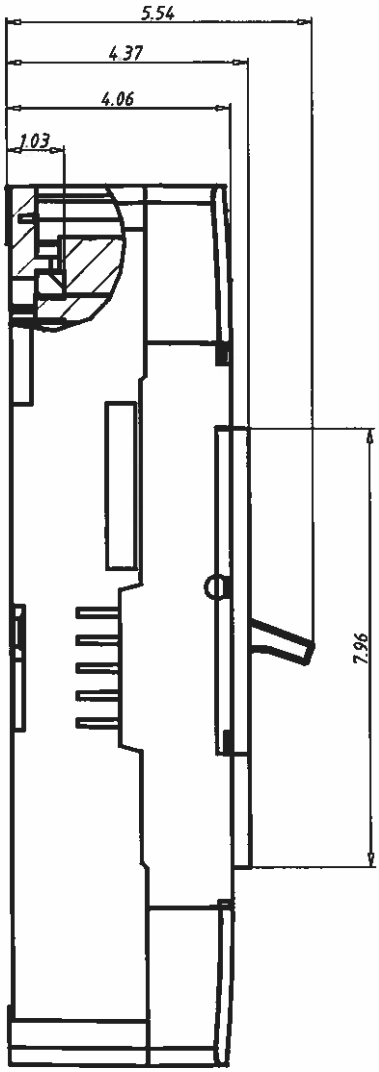

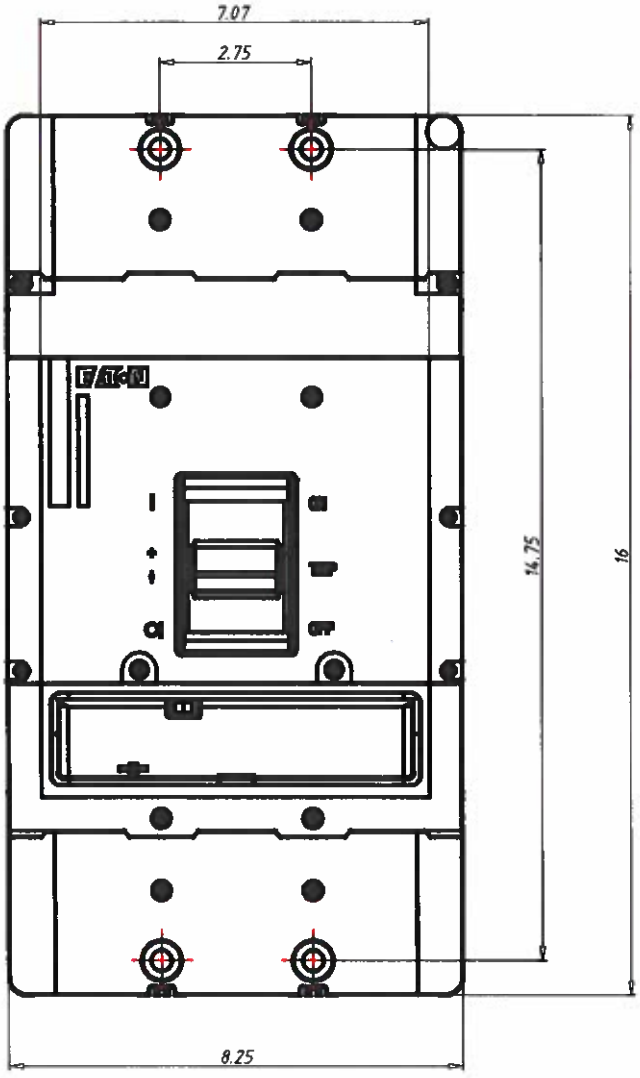

REGULAR SESSION CITY COUNCIL MEETING PACKET FOR THE MEETING TO BE HELD ON SEPTEMBER 20, 2021

Molded Case Circuit Breakers

Power Defense ™ UL Global Series

Part Number: PDG43G0800B2NJNNNNNN

Powering Business Worldwide

Datasheet creation date: 20/11/2019

General Technical Data

Frame Rating (In)	800A
Reference Standard	UL489, CSA 22.2, IEC 60947-2 & GB
Number of poles	3
Neutral rating	-
Interruption Rating Designator	G / K / M
UL Interruption Rating to UL 489 (240Vac)	65 / 85 / 100kA
UL Interruption Rating to UL 489 (480Vac)	35 / 50 / 65(a)kA
UL Interruption Rating to UL 489 (600Vac)	18 / 25 / 35kA
UL Interruption Rating to UL 489 (125/250Vdc)	
UL Current Limiting	-
Rated breaking capacity to IEC 60947-2 (220-240 Vac Icu)	55 / 85 / 100 / 100kA
Rated breaking capacity to IEC 60947-2 (220-240 Vac Ics)	55 / 85 / 100 / 100kA
Rated breaking capacity to IEC 60947-2 (380-415 Vac Icu)	36 / 50 / 70 / 70kA
Rated breaking capacity to IEC 60947-2 (380-415 Vac Ics)	36 / 50 / 53 / 70kA
Rated breaking capacity to IEC 60947-2 (440 Vac Icu)	30 / 35 / 50 / 65kA
Rated breaking capacity to IEC 60947-2 (440 Vac Ics)	22.5 / 35 / 40 / 50kA
Rated breaking capacity to IEC 60947-2 (525 Vac Icu)	20 / 25 / 30 / 35kA
Rated breaking capacity to IEC 60947-2 (525 Vac Ics)	16.5 / 20 / 25 / 25kA
Rated breaking capacity to IEC 60947-2 (690 Vac Icu)	8 / 10 / 15 / 20kA
Rated breaking capacity to IEC 60947-2 (690 Vac Ics)	4 / 5 /7. 5 / 10kA
Rated breaking capacity to IEC 60947-2 (125V DC Icu)	
Rated breaking capacity to IEC 60947-2 (250V DC 2P in series Ics)	22 / 22 / 25kA
Frequency	50/60Hz
Trip Unit Type	PXR10
Continuous Current Range	320 - 800A
100% UL489 Rated	Yes
Instantaneous/Short Circuit Range	2 - 8 In
Magnetic/Instantaneous Override	6800A
Dimensions H x W x D (inches)	16 x 8.25 x 4.38
Pole to pole distance inches	2,75
Approx Weight lbs	29,98
RoHS Compliance	Yes
UL File Number	E7819
Ambient Temp Calibration	
Derating at 50C	
Derating at 60C	
Derating at 70C	

1. 480Vac corresponds to 277Vac for 1P
2. 600Vac corresponds to 347Vac for 1P

REGULAR SESSION CITY COUNCIL MEETING PACKET FOR THE MEETING TO BE HELD ON SEPTEMBER 20, 2021

Digital Linear Chargers

Specifications

- Waterproof, shock-and vibration-resistant aluminum construction
- Saltwater tested and fully corrosion-resistant
- Short circuit, reverse polarity, and ignition protected
- For use with 12V/6 cell batteries that are flooded/wet cell, maintenance free or starved electrolyte (AGM) only
- FCC compliant
- UL listed to marine standard 1236
- 3 year warranty
- Replaces all existing current on-board chargers (excluding portables)
- No Price Increase
- Availability: November 2010



DIGITAL LINEAR ON-BOARD CHARGERS	
PRODUCT CODE	**PRODUCT DESCRIPTION**
1821065	MK 106D (1 bank x 6 amps)
1821105	MK-110D (1 bank x 10 amps)
1822105	MK-210D (2 bank x 5 amps)
1823155	MK-315D (3 bank x 5 amps)
1822205	MK-220D (2 bank x 10 amps)
1823305	MK-330D (3 bank x 10 amps)
1824405	MK-440D (4 bank x 10 amps)
1822305	MK-230D (2 bank x 15 amps)
1823455	MK-345D (3 bank x 15 amps)
1824605	MK-460D (4 bank x 15 amps)

REGULAR SESSION CITY COUNCIL MEETING PACKET FOR THE MEETING TO BE HELD ON SEPTEMBER 20, 2021

Digital Linear Chargers

Specifications (cont.)

- New 4-color package design

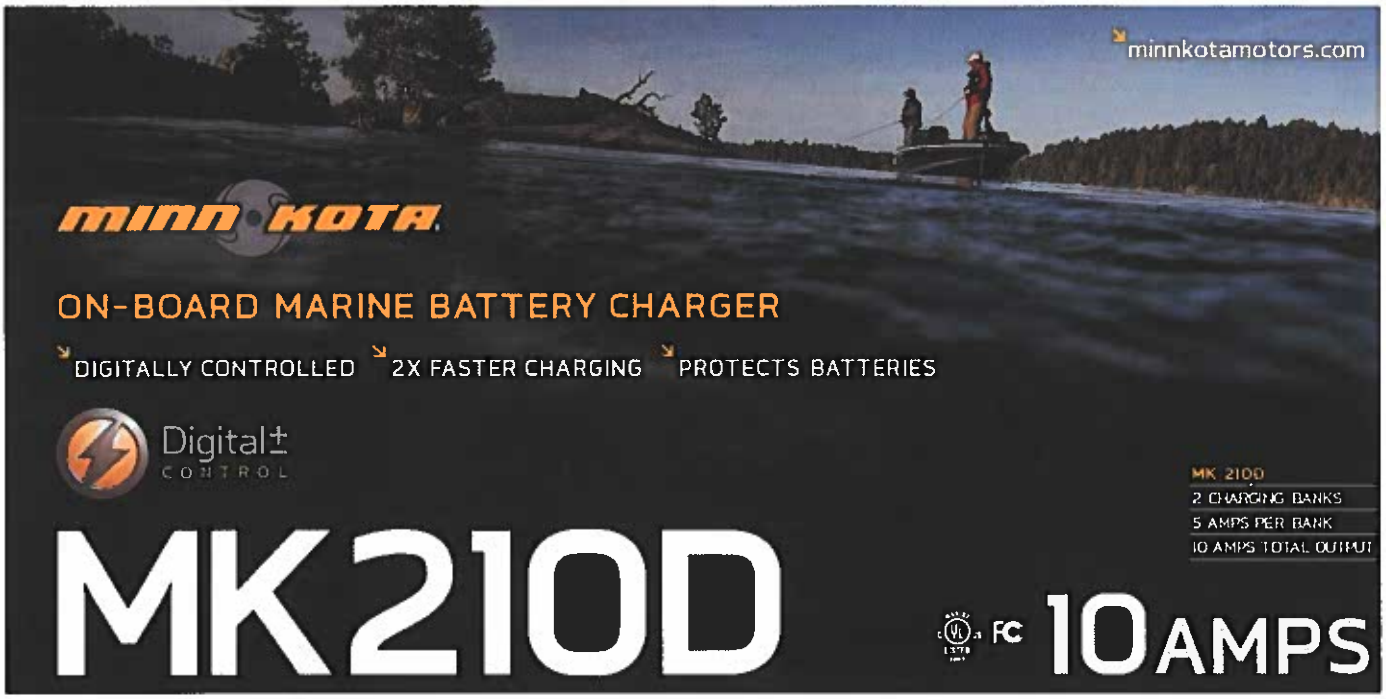

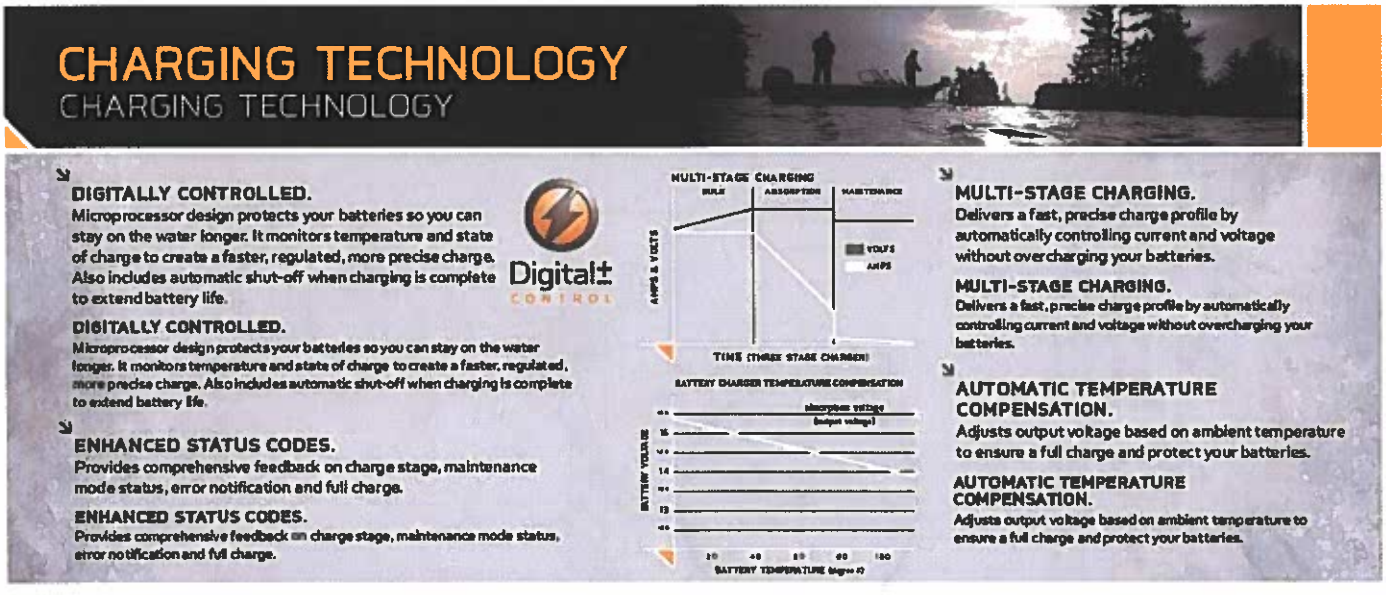

REGULAR SESSION CITY COUNCIL MEETING PACKET FOR THE MEETING TO BE HELD ON SEPTEMBER 20, 2021

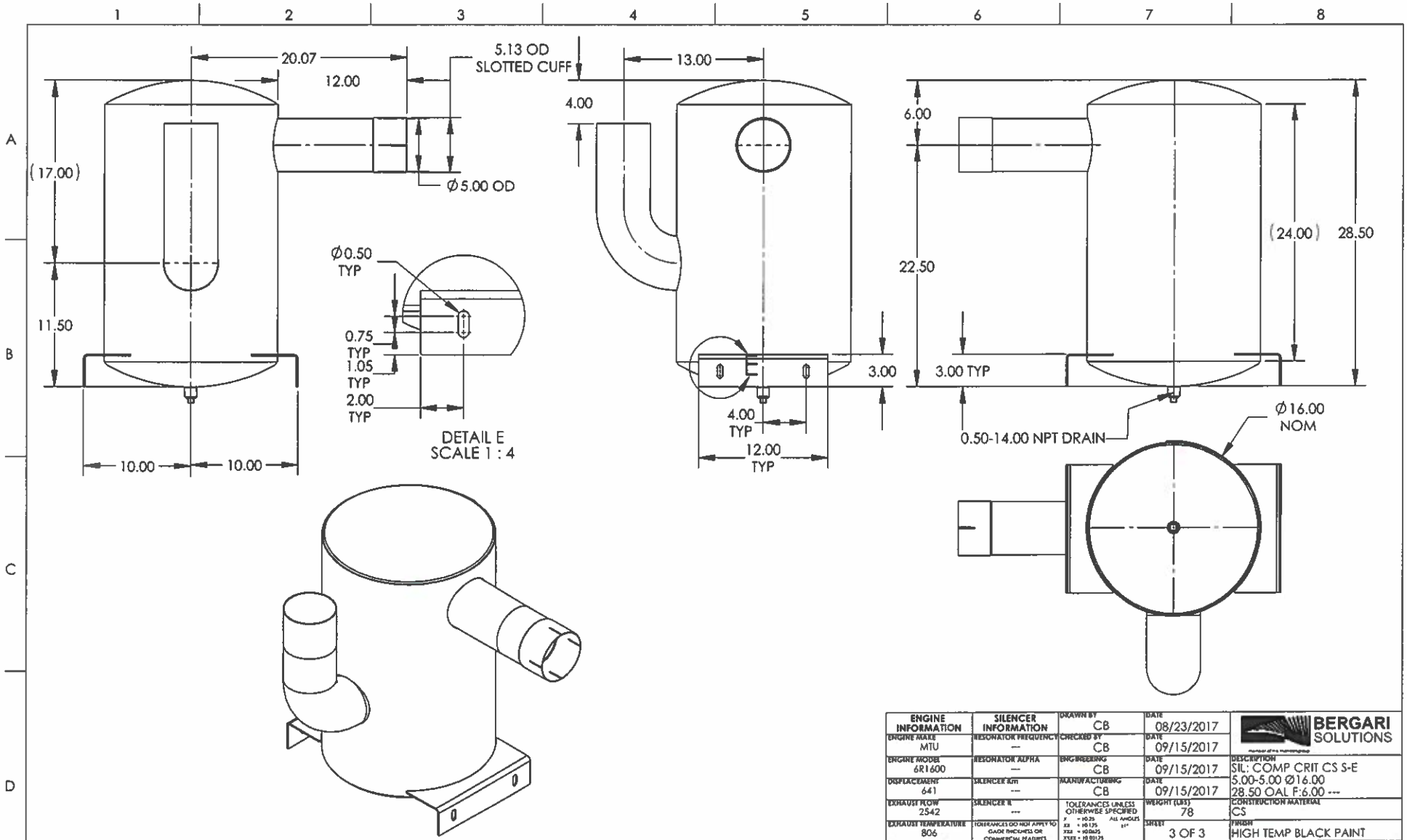

ENGINE INFORMATION		SILENCER INFORMATION		DRAWN BY	DATE	BERGARI SOLUTIONS
ENGINE MAKE	MTU	RESONATOR FREQUENCY	---	CHECKED BY	08/23/2017	
ENGINE MODEL	6R1600	RESONATOR ALPHA	---	ENGINEERING	09/15/2017	DESCRIPTION: SIL: COMP CRIT CS S-E 5.00-5.00 Ø16.00 28.50 OAL F:6.00 ---
DISPLACEMENT	641	SILENCER Xm	---	MANUFACTURING	09/15/2017	
EXHAUST FLOW	2542	SILENCER R	---	TOLERANCES UNLESS OTHERWISE SPECIFIED	09/15/2017	
EXHAUST TEMPERATURE	806	TOLERANCES DO NOT APPLY TO GAGE FINISHES OR COMMERCIAL FEATURES		WEIGHT (LBS)	78	CONSTRUCTION MATERIAL: CS
MAX BACK PRESSURE	60.2	THIRD ANGLE PROJECTION		SHEET	3 OF 3	FINISH: HIGH TEMP BLACK PAINT
RAW SOUND PRESSURE	---					PART NUMBER: 500-008546 REV: 01
CUSTOMER: ---	CUSTOMER P/N: ---					SCALE (DO NOT SCALE): 1:8 SHEET SIZE: B

REV.	BY	DATE	DESCRIPTION	ECO
01	CB	09/15/2017	EXTENDED OVERALL LENGTH	---

This drawing and the information contained is confidential and the property of Bergari Solutions, LLC. None of this information is to be copied or shared in any form without the express permission from Bergari Solutions, LLC.

SP-2000 OPEN DIMENSIONAL OVERVIEW

TOP VIEW

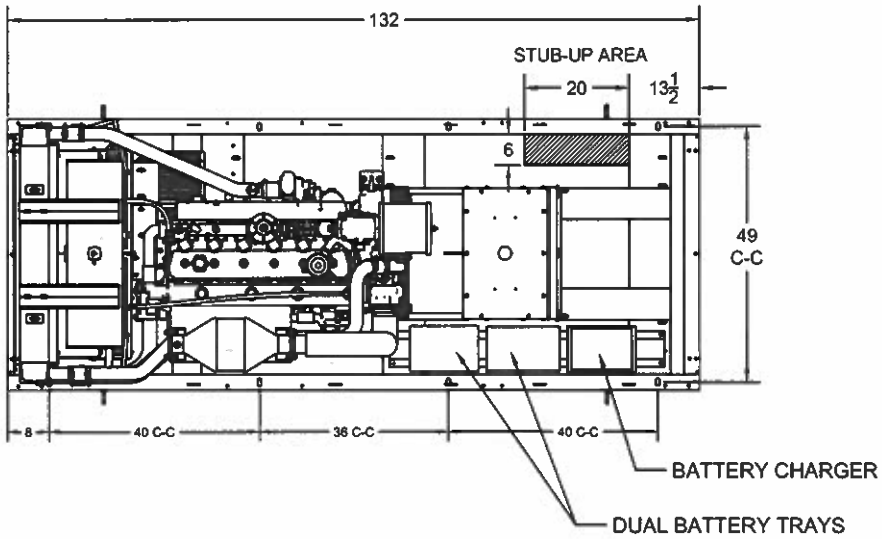

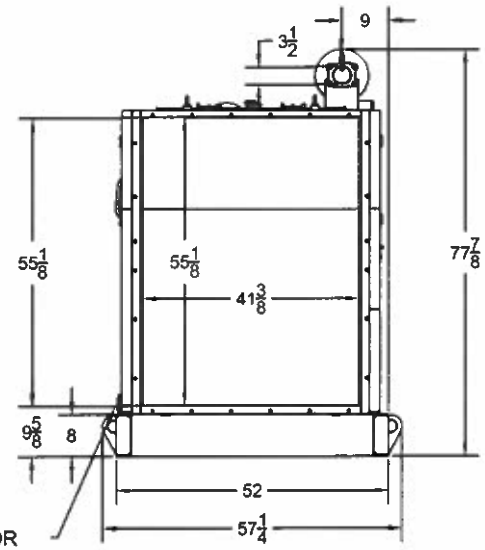

RADIATOR VIEW

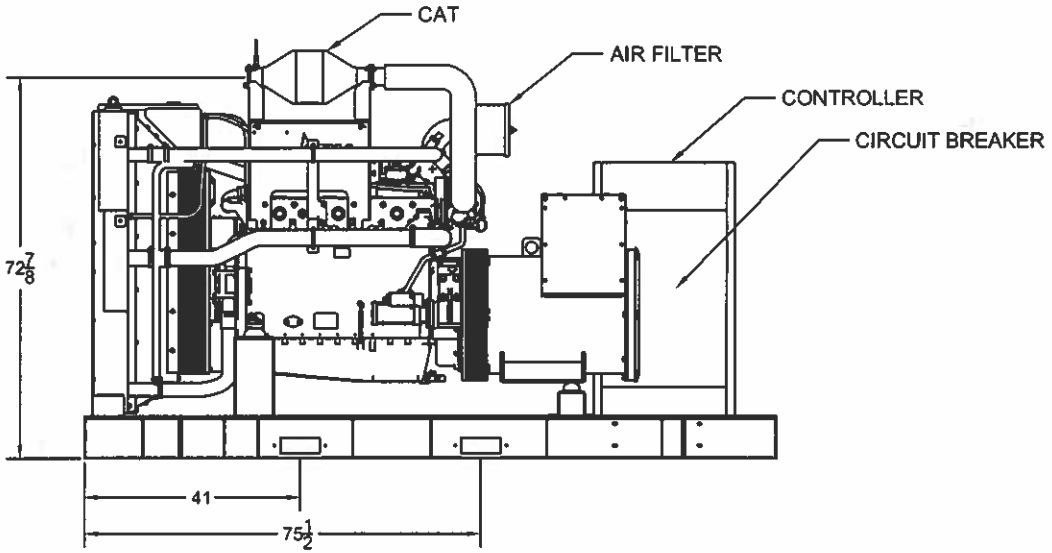

SIDE VIEW

SP-2000-OPEN GENSET DIMENSIONAL OVERVIEW-20170418

REGULAR SESSION CITY COUNCIL MEETING PACKET FOR THE MEETING TO BE HELD ON SEPTEMBER 20, 2021

LEVEL 2 ENCLOSURE OUTLINE DIMENSIONS
FOR SP-2000, THRU SP-3000 & SPMD-3500 THRU SPMD-5000

TOP VIEW
(GEN-SET HAS (6) DOORS, (3) SHOWN OPEN ARE TYPICAL FOR BOTH SIDES)

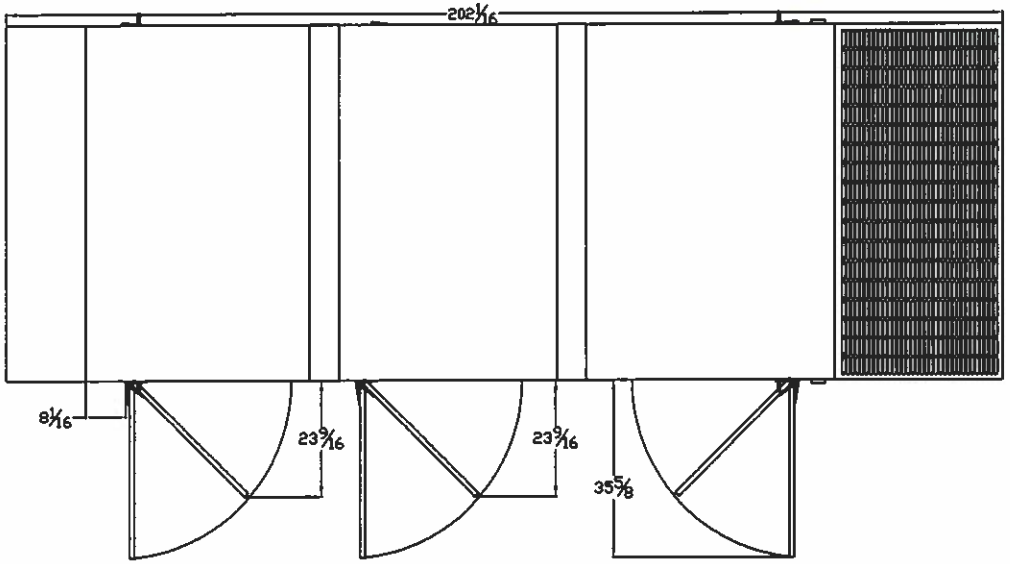

FRAME VIEW

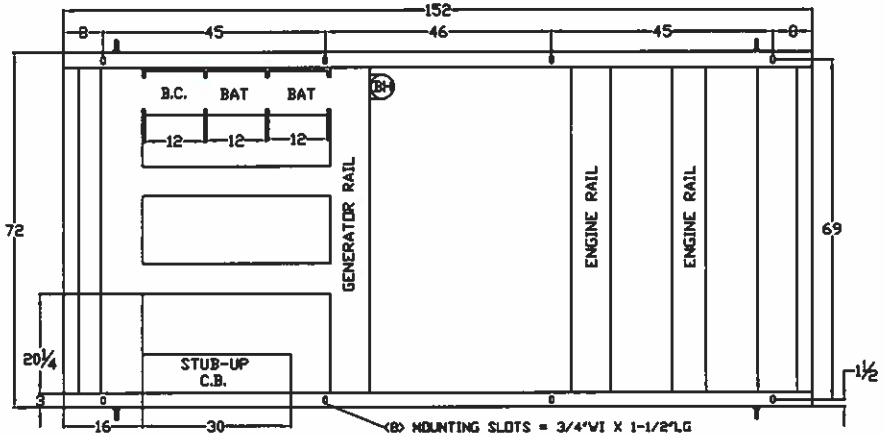

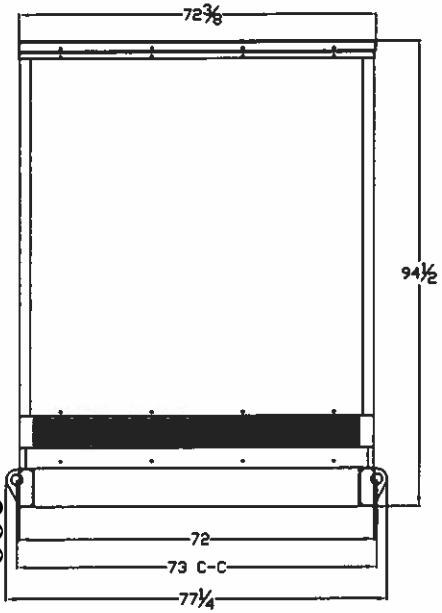

GENERATOR END VIEW

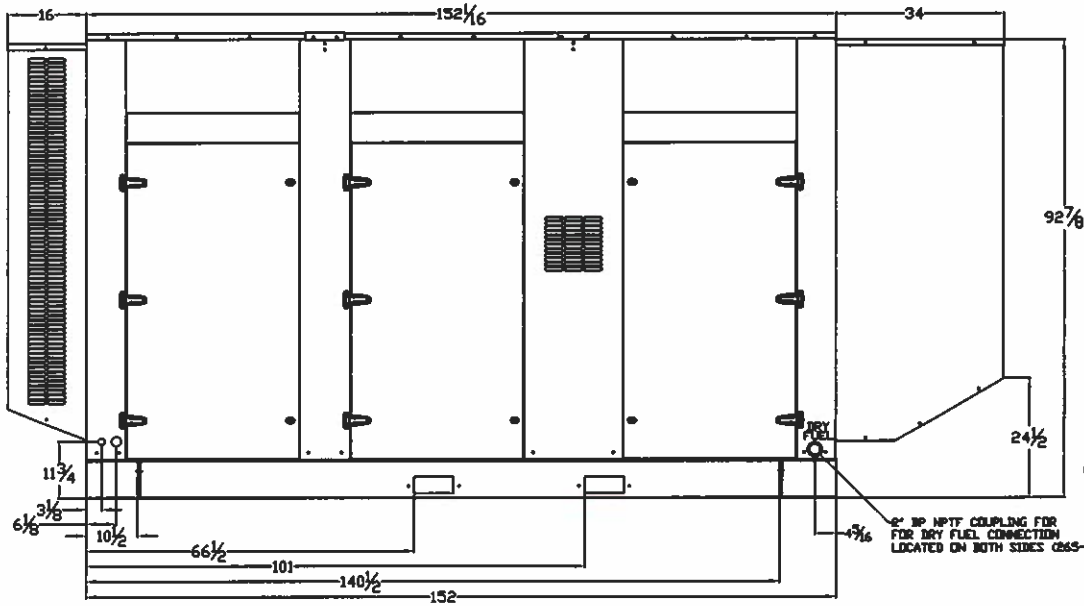

SIDE VIEW

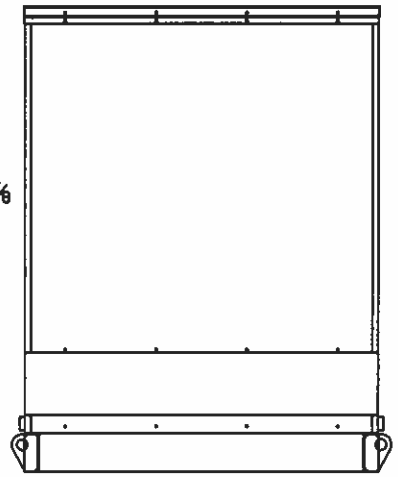

RADIATOR END VIEW

SP-2000-SP-3000-&-SPMD-3500-5000-L2-GENERATOR-SET-HINGES-OVERVIEW-20170410

REGULAR SESSION CITY COUNCIL MEETING PACKET FOR THE MEETING TO BE HELD ON SEPTEMBER 20, 2021

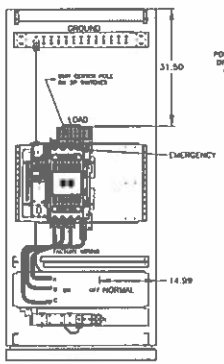

FRONT ELEVATION
INTERIOR VIEW

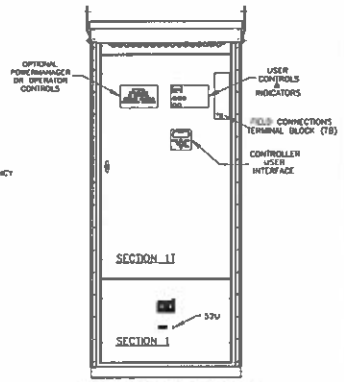

FRONT VIEW: 7000 SERIES
WITHOUT EXTERIOR DOOR

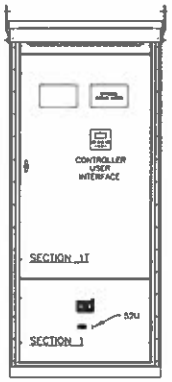

FRONT VIEW: 300 SERIES
WITHOUT EXTERIOR DOOR

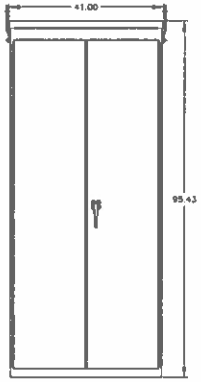

FRONT VIEW

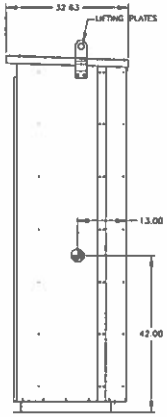

"RIGHT SIDE VIEW"

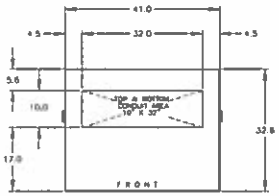

TOP VIEW

GENERAL NOTES

1. TYPE 3R ENCLOSURE, FREE STANDING, FLOOR MOUNTED. CODE GAUGE FORMED STEEL FRAME CONSTRUCTION.
2. FRONT DOOR HAS A STAINLESS STEEL, PADLOCKABLE HANDLE.
3. FINISH: TYPE 3R: ANSI 61 GRAY POLYESTER SEMI GLOSS ELECTROSTATIC POWDER.
   TYPE 3RX: EXTERIOR CONSTRUCTED OF CODE GAUGE TYPE 304 STAINLESS STEEL.
4. RECOMMENDED CLEARANCES:
   FRONT: 36 INCHES
5. ALL BUS IS SILVER-PLATED COPPER, BASED ON 1000A PER SQ. IN. DENSITY.
6. A FULL RATED NEUTRAL CONNECTION FOR EACH SOURCE AND THE LOAD IS OPTIONAL. WHEN PROVIDED IT IS IN ONE OF THE FOLLOWING FORMATS AS SPECIFIED BY THE CATALOG NO. NEUTRAL TYPE,
   A. SOLID (COPPER BUS) NEUTRAL (SHOWN) (PROVIDED STANDARD ON H3AUS)
   B. SWITCHED NEUTRAL POLE
   C. OVERLAPPING NEUTRAL POLE (NOT AVAILABLE ON 7ACUS/7ADUS UNITS)
7. DESIGNED FOR FRONT ACCESS
8. FOR SPECIFIED TRANSFER SWITCH, REFER TO OPERATOR'S MANUAL PROVIDED WITH UNIT.
9. SECTION 1 & SECTION 1T SHIP AS 1 UNIT.
10. CENTER OF GRAVITY.
11. LIFTING PLATES: SECTIONS ARE SUPPLIED WITH LIFTING PLATES.
    INSPECT PLATES FOR DAMAGE AND TORQUE BOLTS TO 45 FT LBS BEFORE USE.
    REFER TO ANSI/NEMA PB 2.1 FOR PROPER HANDLING OF EQUIPMENT.
    AFTER INSTALLATION OF SECTION, REMOVE LIFTING PLATES.
    REINSTALL BOLTS INTO EXTERIOR HOLES AND TORQUE TO APPROX. 20 FT LBS.

SPECIFICATIONS

1. SERVICE VOLTAGE:
   SYSTEM RATING: 450 AMPS, 500 AMPS, 600 AMPS, 3Ø, 4W OR 1Ø, 3W.
   GROUND BUS- 200 AMPS
   SHORT CIRCUIT RATING- 30,000 RMS SYM AMPERES @ 480V, 63,000 RMS SYM AMPERES @ 240V
   THE EMERGENCY SOURCE INPUT MUST BE PROTECTED BY A REMOTE OVERCURRENT PROTECTION DEVICE AS LISTED ON THE MARKINGS ON THE TRANSFER SWITCH.
2. NEUTRAL BUS: 600 AMPS.
3. APPLICABLE LABELS: U.L. 891- SUITABLE ONLY FOR USE AS SERVICE EQUIPMENT.

CABLING NOTES

1. ALL SIZES SUPPLIED STANDARD WITH MECHANICAL (SCREW TYPE) LUGS. (SEE AMP SIZE BELOW)
   A. LUG MATERIAL: ALUMINUM ALLOY 6061-T6 WITH ELECTRO TIN PLATED FINISH.
   B. SCREW MATERIAL: ALUMINUM ALLOY 6262-T9 WITH ELECTRO TIN PLATED FINISH.
   C. UL LISTED, CSA CERTIFIED.
   D. LUG SCREW TIGHTENING TORQUE PER UL 486B: 19 FT-LBS.
   E. SUITABLE WIRE BENDING SPACE IS PROVIDED. (SEE AMP SIZE BELOW)
2. CONSULT FACTORY FOR OTHER TERMINATION REQUIREMENTS.

NOTES 450-600 AMPS

1. SUPPLIED WITH STANDARD MECHANICAL (SCREW TYPE) LUGS ON THE EMERGENCY & LOAD BUS STABS. ONE (1) LUG PER PHASE AND NEUTRAL EACH SUITABLE FOR CONNECTION OF TWO (2) #2 AWG-600MCM CU/AL CABLE (SEE NOTE "A" BELOW).
   A. SUITABLE WIRE BENDING SPACE IS PROVIDED FOR UP TO TWO (2) 600MCM CABLES PER TERMINAL PER NEC.
2. GROUND LUGS ARE PROVIDED STANDARD AS FOLLOWS:
   (6) 1/0 - 750MCM CU/AL CABLE
3. NORMAL CABLE CONNECTIONS SUITABLE FOR (1) 3/0 AWG TO 500 MCM PER Φ AND NEUTRAL.

CIRCUIT BREAKER: ITEM 52U

SQUARE "D" BOX RATED, TYPE "MJL", 800AF/450AT, 800AF/500AT, 800AF/600AT MOLDED CASE, ELECTRONIC TRIP.

ONE LINE DIAGRAMS

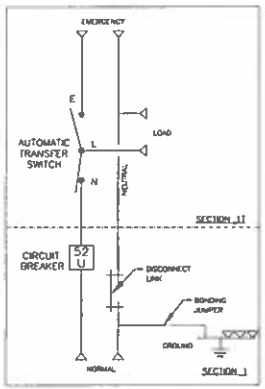

(WITH SOLID NEUTRAL)

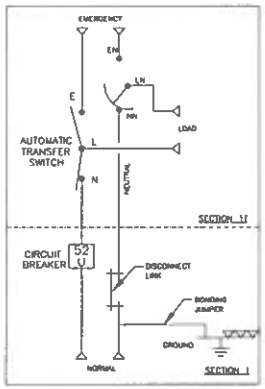

(WITH SWITCHED/OVERLAPPING NEUTRAL)

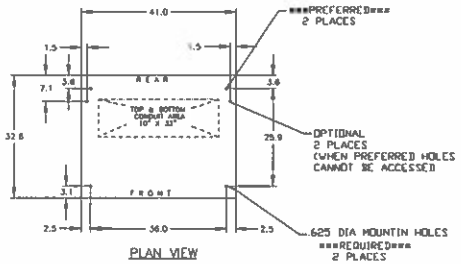

PLAN VIEW

C	249342	SM	RM
	SEE ECN		
B	248048	MM	RM
	SEE ECN		
A	245272	BC	RM 11/07/13
	SEE ECN		
—	241285	LY	3/14/13
	NEW ISSUE		

PROJECT NAME:

OUTLINE | MOUNTING

JA1S 450A - 600A. M/L SERVICE ENTRANCE BREAKER
TYPE 3R/3RX 96.6 X 41 X 33

THIRD ANGLE PROJECTION

	BY	DATE
DRAWN BY	LY	3/14/13
CHECKED		
PRODUCT APPROVAL		
TECH APPROVAL		

ASCO Power Technologies, LP

COMPUTER GENERATED DRAWING

SCALE: NTS | DWN: DS

DWG. NO. 882678-018

DRAWING SIZE: C | CAT. NO. 249342 | SHEET 1 OF 1

Total Energy Solutions
15811 Tuckerton Road
Houston, Texas 77095
Phone: 281-861-1284
Fax: 281-861-1288

Attention: Doug Hall

Reference: Install Generator & ATS at the Jersey Village PD, Jersey Village Texas

We are pleased to submit the following Proposal for Labor & Materials, to replace the existing generator and Automatic Transfer Switch (ATS), at the above referenced address, as discussed and instructed during the Pre-Bid Meeting.

SCOPE OF WORK

- Disconnect output power, controls and 120 volt circuits from the existing generator.
- Prepare the unit for removal, by others.
- Receive and set the ATS (FBO). Connect the ATS.
- Install new conduit and conductors, including controls, from the ATS, to the generator.
- Reconnect all conductors, (Power, controls & 120 Volt circuits) to the new generator.
- Verify phase rotation and voltage.
- Providing products, equipment, systems or cabling, other than those mentioned above.
- furnishing the new ATS and Generator.
- gas line installation.
- included Crane, Rigging or Mechanical Contractor fees, associated with removal in reinstallation of the generator.
- freight or transportation of equipment to or from the site.
- Does not include trash removal from the site.
- Sales Tax & Bond Costs.

REGULAR SESSION CITY COUNCIL MEETING PACKET FOR THE MEETING TO BE HELD ON SEPTEMBER 20, 2021

QUOTATION

Total Energy Solutions
20500 Clay Center Dr
Katy, TX 77449
281-861-1284

Quote Number	8456.1
Quote Date	08/23/2021
Terms	PRE-PAY
Customer ID	
Quote Expires	09/22/2021

Bill To:
City Of Jersey Village 16401 Lakeview Dr Jersey Village , TX 77040 Attn: Accounts Payable

Ship To:
City Of Jersey Village 16401 Lakeview Dr Jersey Village , TX 77040 Requested By: Mark Bitz Job/RFQ #:

Ship Via	Sales Rep	Taker
	Doug Hall	Doug Hall

Shipping Notes

Order Notes

Item ID Item Description	Quantity	UOM	Unit Price	Extended Price
QUOTE ITEM - HOU Sp-1200-3-4 277/480 V, 3 PH, 60 HZ PSI NATURAL GAS FUEI 1800 RPM Customer Part #: Alternate Part #: Line Item Note:	1.00	EA	28,812.20	28,812.20
QUOTE ITEM - HOU ATSN1-230-3-4 230 AMP, 277/480 V, 3 PH, 60 HZ, ASCO AUTO TRANSFER Customer Part #: Alternate Part #: Line Item Note:	1.00	EA	2,800.00	2,800.00
QUOTE ITEM - HOU Mechanical, exhaust and tubing Customer Part #: Alternate Part #: Line Item Note:	1.00	EA	6,250.00	6,250.00

This document is strictly confidential, and not to be distributed to anyone other than the intended receiving party. Prices are subject to change without notice. Prices quoted do not include any federal, state or local sales, use, property, TERP or excise taxes. Taxable status and tax rates will be determined at time of order. All terms and conditions apply.

REGULAR SESSION CITY COUNCIL MEETING PACKET FOR THE MEETING TO BE HELD ON SEPTEMBER 20, 2021

Item ID Item Description	Quantity	UOM	Unit Price	Extended Price
QUOTE ITEM - HOU Electrical Installation **Customer Part #:** **Alternate Part #:** **Line Item Note:**	**1.00**	**EA**	**10,586.67**	**10,586.67**
QUOTE ITEM - HOU Crane, and Rigging **Customer Part #:** **Alternate Part #:** **Line Item Note:**	**1.00**	**EA**	**3,846.15**	**3,846.15**
TP-PLUMBER Plumbing Service **Customer Part #:** **Alternate Part #:** **Line Item Note:**	**1.00**	**EA**	**2,666.67**	**2,666.67**
QUOTE ITEM - HOU generator rental **Customer Part #:** **Alternate Part #:** **Line Item Note:**	**1.00**	**EA**	**1,650.00**	**1,650.00**

Total Lines: 7

Sub-Total:	56,611.68
Tax:	TBD
Addons:	0.00
Total (Before Sales Tax):	56,611.68

This document is strictly confidential, and not to be distributed to anyone other than the intended receiving party. Prices are subject to change without notice. Prices quoted do not include any federal, state or local sales, use, property, TERP or excise taxes. Taxable status and tax rates will be determined at time of order. All terms and conditions apply.

REGULAR SESSION CITY COUNCIL MEETING PACKET FOR THE MEETING TO BE HELD ON SEPTEMBER 20, 2021

GILLETTE GENERATORS

LIQUID COOLED LPG/NG ENGINE GENERATOR SET

60 HZ MODEL

SP-1200

Model	HZ	STANDBY 120°C RISE LPG	STANDBY 120°C RISE N.G.
SP-1200-60 HERTZ	60	110	120

All generator sets are USA prototype built and thoroughly tested. Production models are USA factory built and 100% load tested.

UL2200, UL1446, UL508, UL142, UL498

NFPA 110, 99, 70, 37
All generator sets meet NFPA-110 Level 1, when equipped with the necessary accessories and installed per NFPA standards.

NEC 700, 701, 702, 708

NEMA ICS10, MG1, ICS6, AB1

ANSI C62.41, 27, 59, 32, 480, 40Q, 81U, 360-05

ASCE 7-05 & 7-10
All generator sets meet 180 MPH rating.

EPA 40CFR Part 60, 1048, 1054, 1065, 1068

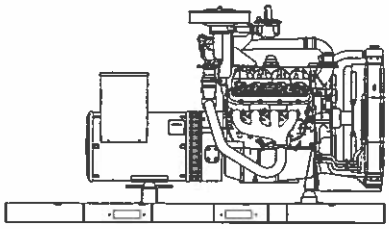

"OPEN" GEN-SET
There is no enclosure, so gen-set must be placed within a weather protected area, un-inhabited by humans or animals, with proper ventilation. Silencer not supplied, as installation requirements are not known. However, this item is available as optional equipment.

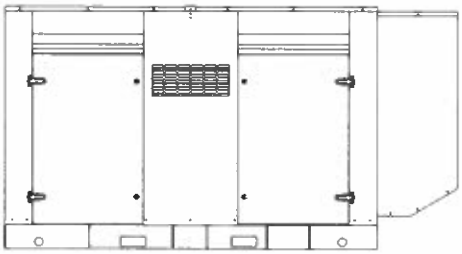

"LEVEL 2" HOUSED GEN-SET
Full aluminum weather protection and superior sound attenuation for specific low noise applications. Critical grade muffler is standard.

GENERATOR RATINGS

GENERATOR MODEL	VOLTAGE L-N	VOLTAGE L-L	PH	HZ	LIQUID PROPANE GAS FUEL 120°C RISE STANDBY RATING KW/KVA	LIQUID PROPANE GAS FUEL 120°C RISE STANDBY RATING AMP	NATURAL GAS FUEL 120°C RISE STANDBY RATING KW/KVA	NATURAL GAS FUEL 120°C RISE STANDBY RATING AMP
SP-1200-1-1	120	240	1	60	110/110	458	120/120	500
SP-1200-3-2	120	208	3	60	110/137.5	382	120/150	416
SP-1200-3-3	120	240	3	60	110/137.5	331	120/150	361
SP-1200-3-4	277	480	3	60	110/137.5	165	120/150	180
SP-1200-3-5	127	220	3	60	110/137.5	361	120/150	394
SP-1200-3-16	346	600	3	60	110/137.5	132	120/150	144

RATINGS: All single phase gen-sets are dedicated 4 lead windings, rated at unity (1.0) power factor. All three phase gen-sets are 12 lead windings, rated at .8 power factor. 120°C "STANDBY RATINGS" are strictly for gen-sets that are used for back-up emergency power to a failed normal utility power source. This standby rating allows varying loads, with no overload capability, for the entire duration of utility power outage. All gen-set power ratings are based on temperature rise measured by resistance method as defined by MIL-STD 705C and IEEE STD 115, METHOD 6.4.4. All generators have class H (180°C) insulation system on both rotor and stator windings. All factory tests and KW/KVA charts shown above are based on 120°C (standby) R/R winding temperature, within a maximum 40°C ambient condition. Generators operated at standby power ratings must not exceed the temperature rise limitation for class H insulation system, as specified in NEMA MG1-22.40. Specifications & ratings are subject to change without prior notice.

REGULAR SESSION CITY COUNCIL MEETING PACKET FOR THE MEETING TO BE HELD ON SEPTEMBER 20, 2021

APPLICATION & ENGINEERING DATA FOR MODEL SP-1200-60 HZ

GENERATOR SPECIFICATIONS

Manufacturer.....Stamford Electric Generators
Model & Type.....UCI274F-06, 4 Pole, 4 Lead, Single Phase
.....UCI274E-311, 4 Pole, 12 Lead re-connectable, Three Phase
.....UCI274E-17, 4 Pole, 6 Lead, 600 V, Three Phase
Exciter.....Brushless, shunt excited
Voltage Regulator.....Solid State, HZ/Volts
Voltage Regulation.....½%, No load to full load
Frequency.....Field convertible, 60 HZ to 50 HZ
Frequency Regulation.....½% (½ cycle, no load to full load)
Unbalanced Load Capability.....100% of standby amps
One Step Load Acceptance.....100% of nameplate rating
Total Stator and Load Insulation.....Class H, 180°C
Temperature Rise.....120°C R/R, standby rating @ 40°C amb.
1 Ø Motor Starting @ 30% Voltage Dip (240V).....415 kVA
3 Ø Motor Starting @ 30% Voltage Dip (208-240V).....450 kVA
3 Ø Motor Starting @ 30% Voltage Dip (480V).....580 kVA
3 Ø Motor Starting @ 30% Voltage Dip (600V).....635 kVA
Bearing.....1, Pre-lubed and sealed
Coupling.....Direct flexible disc
Total Harmonic Distortion.....Max 3½% (MIL-STD705B)
Telephone Interference Factor.....Max 50 (NEMA MG1-22)
Deviation Factor.....Max 5% (MIL-STD 405B)
Ltd. Warranty Period.....24 Months from date of start-up or
.....1000 hours use, first to occur.

GENERATOR FEATURES

- World Renown Stamford Electric Generator having UL-1446 certification on full amortisseur windings.
- Full generator protection with **Deep Sea 7420** controller, having UL-508 certification.
- Automatic voltage regulator with over-excitation, under-frequency compensation, under-speed protection, and EMI filtering. Entire solid-state board is encapsulated for moisture protection.
- Generator power ratings are based on temperature rise, measured by resistance method, as defined in MIL-STD 705C and IEEE STD 115, Method 6.4.4.
- Power ratings will not exceed temperature rise limitation for class H insulation as per NEMA MG1-22.40.
- Insulation resistance to ground, exceeds 1.5 meg-ohm.
- Stator receives 2000 V. hi-potential test on main windings, and rotor windings receive a 1500 V. hi-potential test, as per MIL-STD 705B.
- Complete engine-generator torsional acceptance, confirmed during initial prototype testing.
- Full load testing on all engine-generator sets, before shipping.
- Self ventilating and drip-proof & revolving field design

ENGINE SPECIFICATIONS AND APPLICATIONS DATA

ENGINE

Manufacturer.....General Motors
Model and Type....Ind. Power Train, Vortec, 5.7LTCACGB, 4 cycle
Aspiration.....Turbocharged / Charged Air Cooled
Cylinder Arrangement.....8 Cylinders, V-8
Displacement Cu. In. (Liters).....350 (5.7)
Bore & Stroke In. (Cm.).....4.0 x 3.48 (10.1 x 8.8)
Compression Ratio.....9.4:1
Main Bearings & Style.....5, M400 Copper Lead
Cylinder Head.....Cast Iron
Pistons.....Cast Aluminum
Crankshaft.....Nodular Iron
Exhaust Valve.....Inconel, A193
Governor.....Electronic
Frequency Reg. (no load-full load).....Isochronous
Frequency Reg. (steady state).....± 1/4%
Air Cleaner.....Dry, Replaceable Cartridge
Engine Speed.....1800 RPM
Gearbox Ratio.....1.547: 1
Gearbox Speed Reduction.....2915 down to 1800 RPM
Piston Speed, ft/min (m./min).....1311 (399)
Max Power, bhp (kwm) Standby/LPG.....178 (134)
Max Power, bhp (kwm) Standby/NG.....190 (142)
Ltd. Warranty Period.....12 Months or 2000 hrs., first to occur

FUEL SYSTEM

Type.....LPG or NAT. GAS, Vapor Withdrawal
Fuel Pressure (kpa), in. H_2O*.....(1.74-2.74), 7"-11"
Secondary Fuel Regulator.....NG or LPG Vapor System
Auto Fuel Lock-Off Solenoid.....Standard on all sets
Fuel Supply Inlet Line.....1¼" NPTF
*Measured at gen-set fuel inlet, down stream from any dry fuel accessories

FUEL CONSUMPTION

LP GAS: FT^3/HR (M^3/HR)	STANDBY
100% LOAD	688 (18.8)
75% LOAD	576 (16.5)
50% LOAD	423 (12.0)
LPG = 2500 BTU X FT^3/HR = Total BTU/HR LPG Conversion: 8.50 FT^3 = 1 LB. : 36.4 FT^3 = 1 GAL.	

NAT. GAS: FT^3/HR (M^3/HR)	STANDBY
100% LOAD	1950 (47)
75% LOAD	1500 (42)
50% LOAD	1110 (31)
NG = 1000 BTU X FT^3/HR = Total BTU/HR	

OIL SYSTEM

Type.....Full Pressure
Oil Pan Capacity qt. (L).....8.5 (8.0)
Oil Pan Cap. W/ filter qt. (L).....9.0 (8.5)
Oil Filter.....1, Replaceable Spin-On

ELECTRICAL SYSTEM

Ignition System.....Electronic
Eng. Alternator and Starter:
Ground.....Negative
Volts, DC.....12
Recommended Battery to -18°C (0°F):... 12 VDC, Size BCI# 27, Max Dimensions: .....12" lg X 6 3/4" wi X 9" hi, with standard round posts. Min output at 700 CCA. Battery tray (max. dim. at 12"lg x 7"wi), hold down straps, battery cables, and battery charger, is furnished. Installation of (1) starting battery is

REGULAR SESSION CITY COUNCIL MEETING PACKET FOR THE MEETING TO BE HELD ON SEPTEMBER 20, 2021

required, with possible higher AMP/HR rating, as described above, if normal environment averages -13°F (-25°C) or cooler.

test • start button • power monitoring (kWh, kVAr, kVAh, kVArh)

APPLICATION & ENGINEERING DATA FOR MODEL SP-1200-60 HZ

COOLING SYSTEM

Type of System	Pressurized, closed recovery
Coolant Pump	Pre-lubricated, self-sealing
Cooling Fan Type (no. of blades)	Pusher (7)
Fan Diameter inches (cm)	26" (660)
Ambient Capacity of Radiator °F (°C)	125 (51.6)
Engine Jacket Coolant Capacity Gal (L)	3.6 (13.7)
Radiator Coolant Capacity Gal. (L)	4.3 (16.2)
Maximum Restriction of Cooling Air Intake and discharge side of radiator in. H_20 (kpa)	0.5 (.125)
Water Pump Capacity gpm (L/min)	33 (125)
Heat Reject Coolant: Btu/min (kw)	6260 (110)
Low Radiator Coolant level Shutdown	Standard

Note: Coolant temp. shut-down switch setting at 212°F (100°C) with 50/50 (water/antifreeze) mix.

COOLING AIR REQUIREMENTS

Combustion Air, cfm (m^3/min)	312 (8.8)
Radiator Air Flow cfm (m^3/min)	12,000 (340)
Heat Rejected to Ambient:	
Engine: kw (btu/min)	84 (4790)
Alternator: kw (btu/min)	16 (912)

EXHAUST SYSTEM

Emissions LPG (NG); THC+NOx : g/kW-hr	0.343 (0.166)
Emissions LPG (NG); CO : g/kW-hr	0.175 (0.417)
Emissions LPG (NG); bsfc : g/kW-hr	243.8 (221.5)
Exhaust Outlet Size	3.5"
Max. Back Pressure, in. hg (KPA)	3.0 (10.2)
Exhaust Flow, at rated kw: cfm (m^3/min)	1063 (30.1)
Exhaust Temp., at rated kw: °F (°C)	1300 (704)

Engines are EPA certified for LPG and Natural Gas.

SOUND LEVELS MEASURED IN dB(A)

	Open Set	Level 2 Encl.
Level 1, Residential Silencer	91	N/A
Level 2, Critical Silencer	88	81
Level 3, Hospital Silencer		75

Note: Open sets (no enclosure) have silencer system choices due to unknown job-site applications. Level 2 enclosure has installed critical silencer with upgrade to Level 3 hospital silencer. Sound tests are averaged from several test points and taken at 23 ft. (7 m) from source of noise at normal operation.

DERATE GENERATOR FOR ALTITUDE

3% per 1000 ft.(305m) above 3000 ft. (914m) from sea level

DERATE GENERATOR FOR TEMPERATURE

2% per 10°F(5.6°C) above 104°F (40°C)

DIMENSIONS AND WEIGHTS

	Open Set	Level 2 Enclosure
Length in (cm)	110 (279)	134 (341)
Width in (cm)	48 (122)	48 (122)
Height in (cm)	52 (132)	72.5 (183)
1 Ø Net Weight lbs (kg)	2684 (1217)	3484 (1580)
1 Ø Ship Weight lbs (kg)	2874 (1303)	3734 (1694)
3 Ø Net Weight lbs (kg)	2624 (1190)	3444 (1562)
3 Ø Ship Weight lbs (kg)	2814 (1276)	3694 (1676)

DEEP SEA 7420 DIGITAL MICROPROCESSOR CONTROLLER



Deep Sea 7420

The "**7420**" controller is an auto start mains (utility) failure module for single gen-set applications. This controller includes a backlit LCD display which continuously displays the status of the engine and generator at all times.

The "**7420**" controller will also monitor speed, frequency, voltage, current, oil pressure, coolant temp., and fuel levels. These modules have been designed to display warning and shut down status. It also includes: (11) configurable inputs • (8) configurable outputs • voltage monitoring • mains (utility) failure detection • (250) event logs • configurable timers • automatic shutdown or warning during fault detection • remote start (on load) • engine preheat • advanced metering capability • hour meter • text LCD displays • protected solid state outputs • test buttons for: stop/reset • manual mode • auto mode • lamp test • start button • power monitoring (kWh, kVAr, kVAh, kVArh)

This controller includes expansion features including RS232, RS484 (using MODBUS-RTU/TCP), direct USB connection with PC, expansion optioned using DSENet for remote annunciation and remote relay interfacing for a distance of up to 3300FT. The controller software is freely downloadable from the internet and allows monitoring with direct USB cable, LAN, or by internet via the built in web interface.



Further expansion is available by adding the optional "WebNet" gateway interface module. This device will allow comprehensive monitoring of the generator via the cloud including identification, location, and status. Some advantages of this module include: reduced site visits and maintenance costs • remote fuel management • fault analysis • asset tracking • automatic system alerts • maximized system up-time.

REGULAR SESSION CITY COUNCIL MEETING PACKET FOR THE MEETING TO BE HELD ON SEPTEMBER 20, 2021

STANDARD FEATURES FOR MODEL SP-1200-60 HZ

STANDARD FEATURES

CONTROL PANEL:

Deep Sea 7420 digital microprocessor with logic allows programming in the field. Controller has:

- STOP-MANUAL-AUTO modes and automatic engine shutdowns, signaled by full text LCD indicators:
- Low oil pressure
- High engine temp
- Low Radiator Level
- Three auxiliary alarms
- Battery fail alarm
- Engine fail to start
- Engine over speed
- Engine under speed
- Over & under voltage

Also included is tamper-proof engine hour meter

ENGINE:

Full flow oil filter • Air filter • Oil pump • Solenoid type starter motor • Hi-temp radiator • Jacket water pump • Thermostat • Pusher fan and guard • Exhaust manifold • 12 VDC battery charging alternator • Flexible exhaust connector • "Isochronous" duty, electronic governor • Secondary dry fuel regulator • Dry fuel lock-off solenoid • Vibration isolators • Closed coolant recovery system with 50/50 water to anti-freeze mixture • flexible oil & radiator drain hose.

Design & specifications subject to change without prior notice. Dimensions shown are approximate. Contact Gillette for certified drawings. DO NOT USE DIMENSIONS FOR INSTALLATION PURPOSES.

AC GENERATOR SYSTEM:

AC generator • Shunt excited • Brushless design • Circuit Breaker installed and wired to gen-set • Direct connection to engine with flex disc • Class H, 180°C insulation • Self ventilated • Drip proof construction • UL Certified

VOLTAGE REGULATOR:

½% Voltage regulation • EMI filter • Under-speed protection • Over-excitation protection • total encapsulation

DC ELECTRICAL SYSTEM:

Battery tray • Battery cables • Battery hold down straps • 2-stage battery float charger with maintaining & recharging automatic charge stages.

WEATHER/SOUND PROOF ALUMINUM HOUSING CORROSION RESISTANT PROTECTION CONSISTING OF:

- 9 Heated And Agitated Wash Stages
- Zinc Phosphate Etching-coating Stage
- Final Baked On Enamel Powder
- 18/8 Stainless Steel Hardware

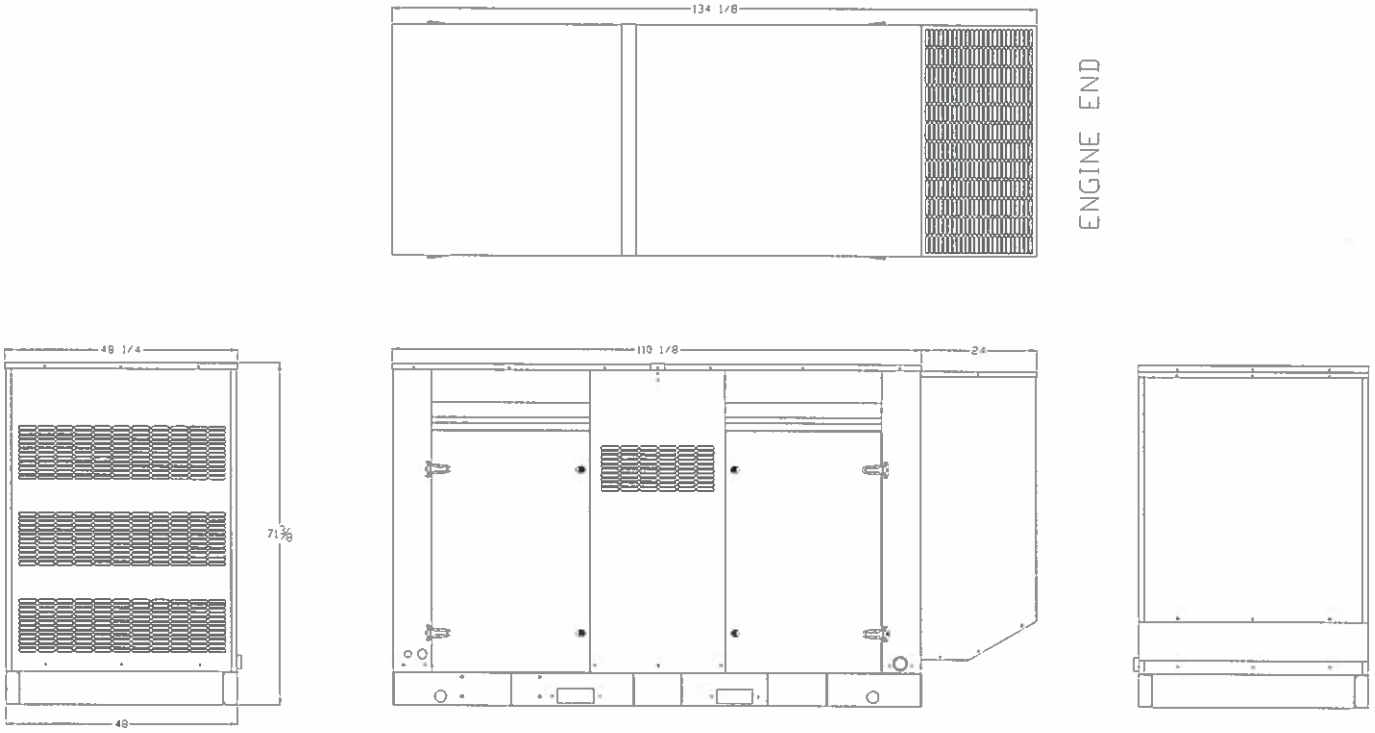

REGULAR SESSION CITY COUNCIL MEETING PACKET FOR THE MEETING TO BE HELD ON SEPTEMBER 20, 2021

PSI INDUSTRIAL

5.7L TGB ENGINE

Product Overview

FEATURES

- High-flow cylinder head with straighter intake ports and optimum compression ratio delivers impressive horsepower
- Increased cooling around hardened exhaust valve seats for added durability
- Roller valve lifters for reduced friction and improved performance
- Composite front timing cover for noise reduction and corrosion protection
- Valvetrain features advanced design silent timing chain for added durability and positive inlet valve stem seals for reduced oil consumption
- Common rear face on most GM
- Powertrain engines for easy hookup with housing



OPTIONS

- Standard cast 4-barrel intake manifold designed for maximum power at idle to 3000 rpm
- High Energy Ignition (HEI) distributor and coil
- Electronic Control Module (ECM) utilizing state-of-the-art hybrid technology and related hardware to optimize fuel and spark requirements is available
- Fuel options: LPG, NG
- SAE 3-flywheel housing (cast iron)
- SAE flywheels
- Custom-made flywheels for numerous applications
- Cooling fans
- Radiators & complete cooling systems
- Electric governor systems available
- Dry-type industrial air cleaners (safety element air cleaners available)

MAXIMUM PERFORMANCE
NO COMPROMISES

EMISSIONS-CERTIFIED • FUEL-FLEXIBLE • MADE IN USA

REGULAR SESSION CITY COUNCIL MEETING PACKET FOR THE MEETING TO BE HELD ON SEPTEMBER 20, 2021

PSI INDUSTRIAL

5.7L TGB ENGINE

5.7L TGB Engineering Data

Displacement	350 cid (5736.50 cc)
Bore x Stroke	4.00 in x 3.48 in 101.60 mm x 88.39 mm
Compression Ratio	9.4:1
Fuel Types	NG, LP
kWe	120 @ 1,800 rpm (NG) 95 @ 1,500 rpm (NG)
Emissions	Certified through 2014

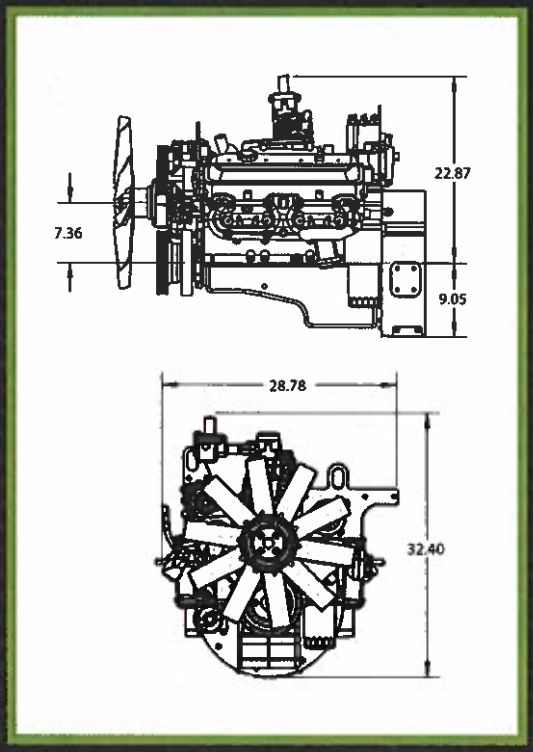

Correction to SAE J1995. Actual power levels will vary depending on OEM calibration and application.

Information may vary with application. All specifications listed are based on the latest product information available at the time of publication. The right is reserved to make changes at any time without notice.

655 Wheat Lane, Wood Dale, IL 60191
T: 630-350-9400 F: 630-350-9900
www.psiengines.com

REGULAR SESSION CITY COUNCIL MEETING PACKET FOR THE MEETING TO BE HELD ON SEPTEMBER 20, 2021

STAMFORD®

UCI274F - Winding 06

Technical Data Sheet

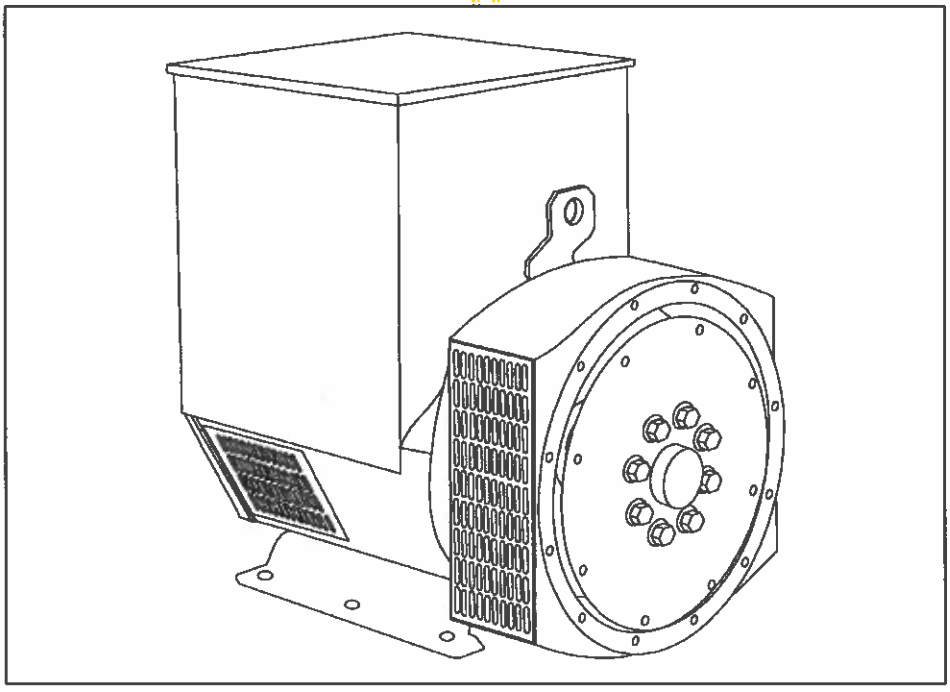

REGULAR SESSION CITY COUNCIL MEETING PACKET FOR THE MEETING TO BE HELD ON SEPTEMBER 20, 2021

SPECIFICATIONS & OPTIONS

STANDARDS

Stamford industrial generators meet the requirements of BS EN 60034 and the relevant section of other international standards such as BS5000, VDE 0530, NEMA MG1-32, IEC34, CSA C22.2-100, AS1359.
Other standards and certifications can be considered on request.

VOLTAGE REGULATORS

SX460 AVR - STANDARD

With this self excited control system the main stator supplies power via the Automatic Voltage Regulator (AVR) to the exciter stator. The high efficiency semiconductors of the AVR ensure positive build-up from initial low levels of residual voltage.
The exciter rotor output is fed to the main rotor through a three phase full wave bridge rectifier. This rectifier is protected by a surge suppressor against surges caused, for example, by short circuit.

AS440 AVR

With this self-excited system the main stator provides power via the AVR to the exciter stator. The high efficiency semi-conductors of the AVR ensure positive build-up from initial low levels of residual voltage.
The exciter rotor output is fed to the main rotor through a three-phase full-wave bridge rectifier. The rectifier is protected by a surge suppressor against surges caused, for example, by short circuit or out-of-phase paralleling.
The AS440 will support a range of electronic accessories, including a 'droop' Current Transformer (CT) to permit parallel operation with other ac generators.

MX341 AVR

This sophisticated AVR is incorporated into the Stamford Permanent Magnet Generator (PMG) control system.
The PMG provides power via the AVR to the main exciter, giving a source of constant excitation power independent of generator output. The main exciter output is then fed to the main rotor, through a full wave bridge, protected by a surge suppressor. The AVR has in-built protection against sustained over-excitation, caused by internal or external faults. This de-excites the machine after a minimum of 5 seconds.
An engine relief load acceptance feature can enable full load to be applied to the generator in a single step.

MX321 AVR

The most sophisticated of all our AVRs combines all the features of the MX341 with, additionally over voltage protection built-in and short circuit current level adjustments as an optional facility.

WINDINGS & ELECTRICAL PERFORMANCE

All generator stators are wound to 2/3 pitch. This eliminates triplen (3rd, 9th, 15th ...) harmonics on the voltage waveform and is found to be the optimum design for trouble-free supply of non-linear loads. The 2/3 pitch design avoids excessive neutral currents sometimes seen with higher winding pitches, when in parallel with the mains. A fully connected damper winding reduces oscillations during paralleling. This winding, with the 2/3 pitch and carefully selected pole and tooth designs, ensures very low waveform distortion.

TERMINALS & TERMINAL BOX

Dedicated Single Phase windings have 4 ends brought out to the terminals, which are mounted on a cover at the non-drive end of the generator. A sheet steel terminal box contains the AVR and provides ample space for the customers' wiring and gland arrangements. It has removable panels for easy access.

SHAFT & KEYS

All generator rotors are dynamically balanced to better than BS6861:Part 1 Grade 2.5 for minimum vibration in operation. Two bearing generators are balanced with a half key.

INSULATION/IMPREGNATION

The insulation system is class 'H'.
All wound components are impregnated with materials and processes designed specifically to provide the high build required for static windings and the high mechanical strength required for rotating components.

QUALITY ASSURANCE

Generators are manufactured using production procedures having a quality assurance level to
BS EN ISO 9001.

The stated voltage regulation may not be maintained in the presence of certain radio transmitted signals. Any change in performance will fall within the limits of Criteria 'B' of EN 61000-6-2:2001. At no time will the steady-state voltage regulation exceed 2%.

DE RATES

All values tabulated on page 7 are subject to the following reductions

5% when air inlet filters are fitted.
3% for every 500 metres by which the operating altitude exceeds 1000 metres above mean sea level.
3% for every 5 C by which the operational ambient temperature exceeds 40 C.

Note: Requirement for operating in an ambient exceeding 60 C must be referred to the factory.

NB Continuous development of our products entitles us to change specification details without notice, therefore they must not be regarded as binding.

Front cover drawing typical of product range.

APPROVED DOCUMENT

REGULAR SESSION CITY COUNCIL MEETING PACKET FOR THE MEETING TO BE HELD ON SEPTEMBER 20, 2021

UCI274F

STAMFORD

WINDING 06

CONTROL SYSTEM	SEPARATELY EXCITED BY P.M.G.		
A.V.R.	MX341	MX321	
VOLTAGE REGULATION	± 1%	± 0.5 %	With 4% ENGINE GOVERNING
SUSTAINED SHORT CIRCUIT	REFER TO SHORT CIRCUIT DECREMENT CURVES (page 6)		

CONTROL SYSTEM	SELF EXCITED		
A.V.R.	SX460	AS440	
VOLTAGE REGULATION	± 1.0 %	± 1.0 %	With 4% ENGINE GOVERNING
SUSTAINED SHORT CIRCUIT	SERIES 4 CONTROL DOES NOT SUSTAIN A SHORT CIRCUIT CURRENT		

INSULATION SYSTEM	CLASS H	
PROTECTION	IP23	
RATED POWER FACTOR	0.8	
STATOR WINDING	SINGLE LAYER CONCENTRIC	
WINDING PITCH	TWO THIRDS	
WINDING LEADS	4	
MAIN STATOR RESISTANCE	0.01 Ohms AT 22°C SERIES CONNECTED	
MAIN ROTOR RESISTANCE	1.52 Ohms at 22°C	
EXCITER STATOR RESISTANCE	20 Ohms at 22°C	
EXCITER ROTOR RESISTANCE	0.091 Ohms PER PHASE AT 22°C	
R.F.I. SUPPRESSION	BS EN 61000-6-2 & BS EN 61000-6-4,VDE 0875G, VDE 0875N. refer to factory for others	
WAVEFORM DISTORTION	NO LOAD < 1.5% NON-DISTORTING LINEAR LOAD < 5.0%	
MAXIMUM OVERSPEED	2250 Rev/Min	
BEARING DRIVE END	BALL. 6315-2RS (ISO)	
BEARING NON-DRIVE END	BALL. 6310-2RS (ISO)	
	1 BEARING	2 BEARING
WEIGHT COMP. GENERATOR	530 kg	545 kg
WEIGHT WOUND STATOR	200 kg	200 kg
WEIGHT WOUND ROTOR	188.67 kg	177.71 kg
WR² INERTIA	1.555 kgm^2	1.5044 kgm^2
SHIPPING WEIGHTS in a crate	563 kg	577 kg
PACKING CRATE SIZE	123 x 67 x 103(cm)	123 x 67 x 103(cm)
TELEPHONE INTERFERENCE	THF<2%	TIF<50
COOLING AIR	0.617 m^3/sec 1308 cfm	

VOLTAGE SERIES	220	230	240
VOLTAGE PARALLEL	110	115	120
kVA BASE RATING FOR REACTANCE VALUES	135	135	135
Xd DIR. AXIS SYNCHRONOUS	2.53	2.32	2.13
X'd DIR. AXIS TRANSIENT	0.21	0.20	0.18
X"d DIR. AXIS SUBTRANSIENT	0.14	0.13	0.12
Xq QUAD. AXIS REACTANCE	1.54	1.40	1.29
X"q QUAD. AXIS SUBTRANSIENT	0.20	0.19	0.17
X_L LEAKAGE REACTANCE	0.10	0.09	0.08
X_2 NEGATIVE SEQUENCE	0.17	0.15	0.14
X_0 ZERO SEQUENCE	0.11	0.10	0.09

REACTANCES ARE SATURATED

T'd TRANSIENT TIME CONST.	0.035 s
T"d SUB-TRANSTIME CONST.	0.011 s
T'do O.C. FIELD TIME CONST.	0.9 s
Ta ARMATURE TIME CONST.	0.009 s
SHORT CIRCUIT RATIO	1/Xd

PREVIOUS DOCUMENT

REGULAR SESSION CITY COUNCIL MEETING PACKET FOR THE MEETING TO BE HELD ON SEPTEMBER 20, 2021

UCI274F

STAMFORD

Winding 06

SINGLE PHASE EFFICIENCY CURVES

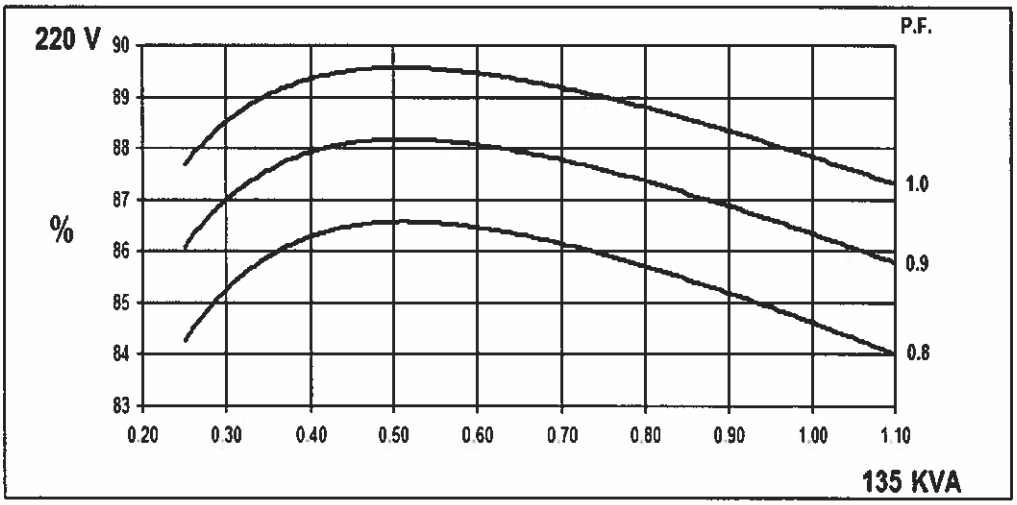

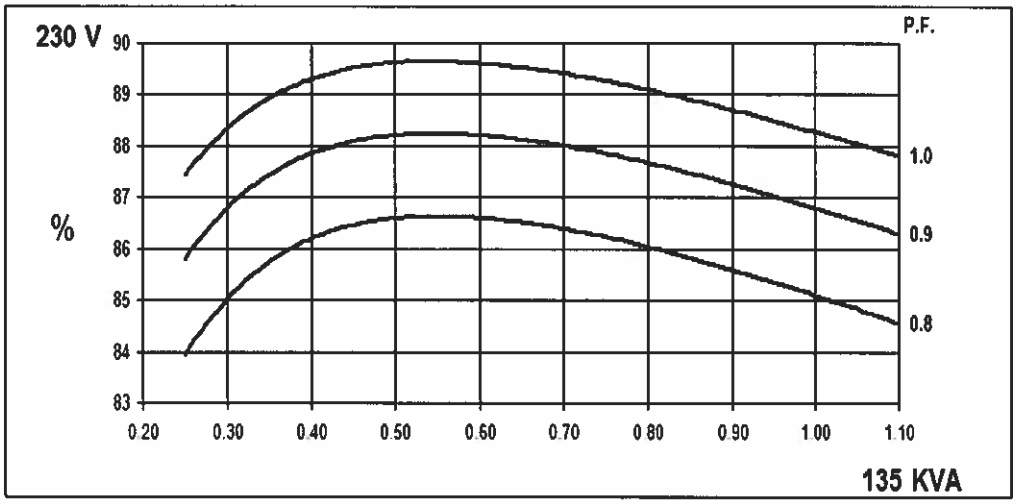

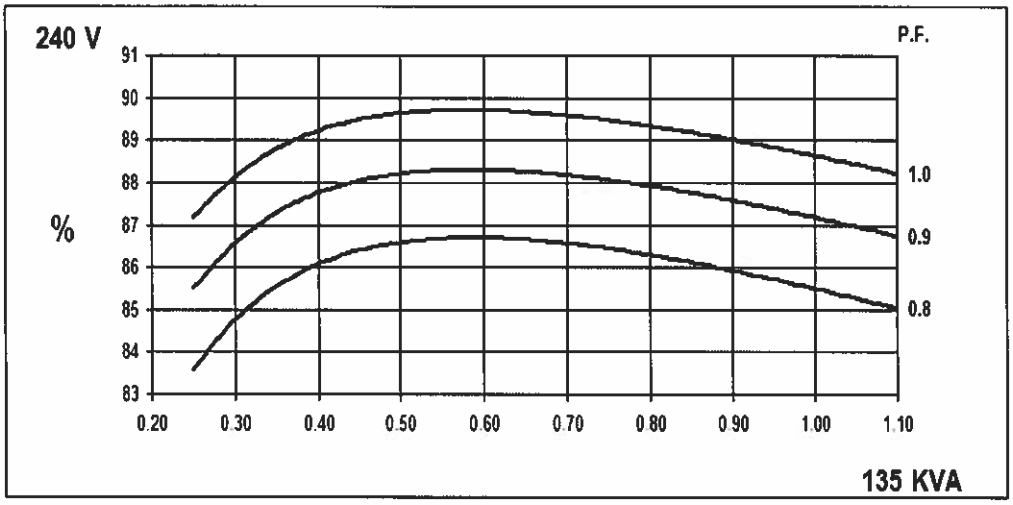

REGULAR SESSION CITY COUNCIL MEETING PACKET FOR THE MEETING TO BE HELD ON SEPTEMBER 20, 2021

UCI274F

STAMFORD

Winding 06

SX

Locked Rotor Motor Starting Curves

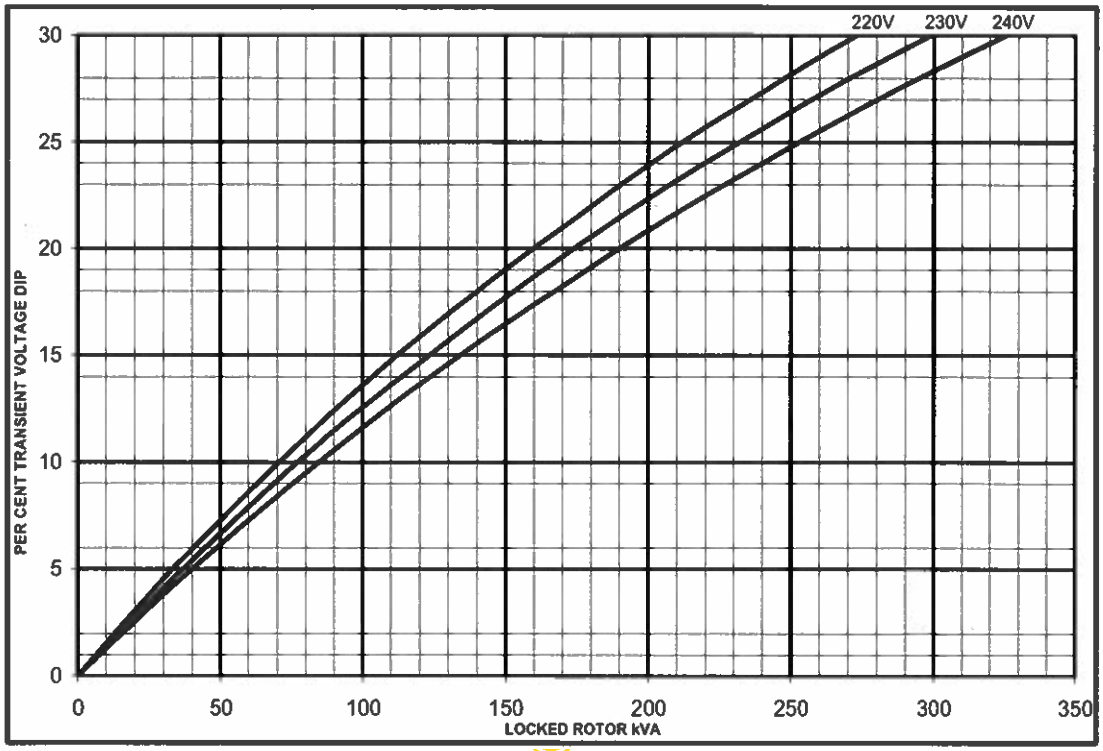

MX

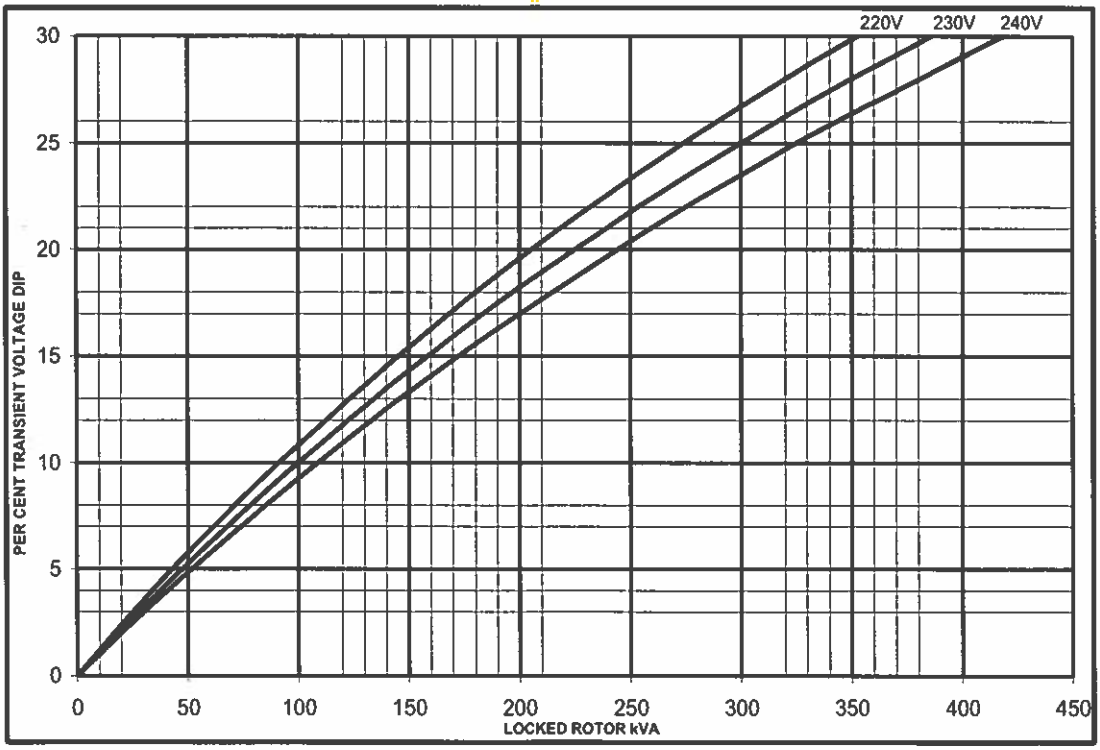

UCI274

REGULAR SESSION CITY COUNCIL MEETING PACKET FOR THE MEETING TO BE HELD ON SEPTEMBER 20, 2021

UCI274F
Winding 06

STAMFORD

Short Circuit Decrement Curve. No-load Excitation at Rated Speed
Based on series connection.

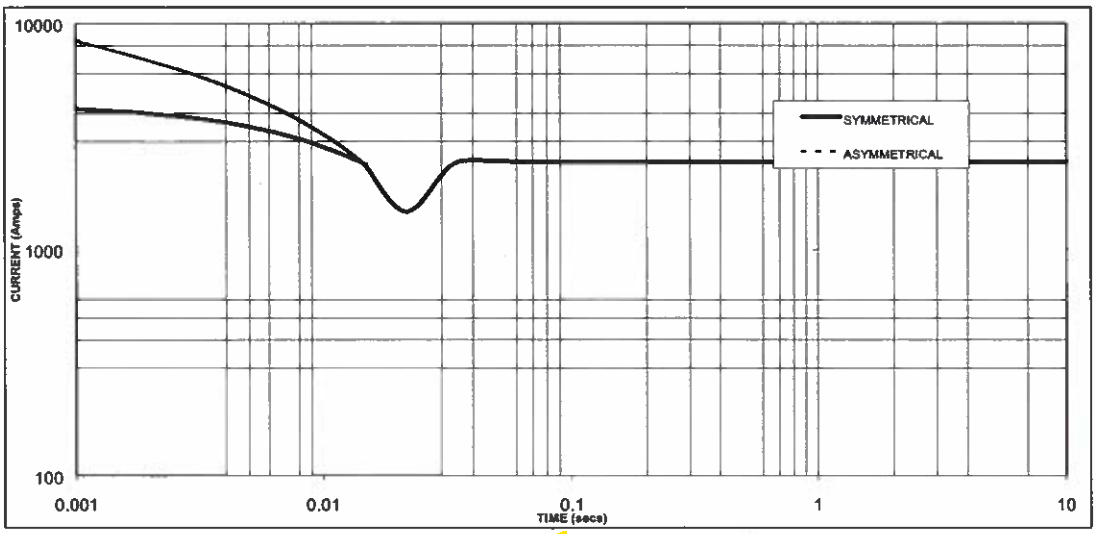

Sustained Short Circuit = 2450 Amps

Note
The following multiplication factors should be used to adjust the values from curve between time 0.001 seconds and the minimum current point in respect of nominal operating voltage :

Voltage	Factor
220V	X 1.00
230V	X 1.05
240V	X 1.09

The sustained current value is constant irrespective of voltage level

VED DOCUMENT

REGULAR SESSION CITY COUNCIL MEETING PACKET FOR THE MEETING TO BE HELD ON SEPTEMBER 20, 2021

UCI274F

Winding 06

STAMFORD

60Hz

RATINGS

Class - Temp Rise	Cont. F - 105/40°C 0.8pf			Cont. H - 125/40°C 0.8pf			Cont. F - 105/40°C 1.0pf			Cont. H - 125/40°C 1.0pf		
Series (V)	220	230	240	220	230	240	220	230	240	220	230	240
Parallel (V)	110	115	120	110	115	120	110	115	120	110	115	120
kVA	125.0	125.0	125.0	135.0	135.0	135.0	125.0	125.0	125.0	135.0	135.0	135.0
kW	100.0	100.0	100.0	108.0	108.0	108.0	125.0	125.0	125.0	135.0	135.0	135.0
Efficiency (%)	85.0	85.5	85.8	84.6	85.1	85.5	88.2	88.6	88.9	87.8	88.3	88.6
kW Input	117.6	117.0	116.6	127.7	126.9	126.3	141.7	141.1	140.6	153.8	152.9	152.4

APPRC/E

DIMENSIONS

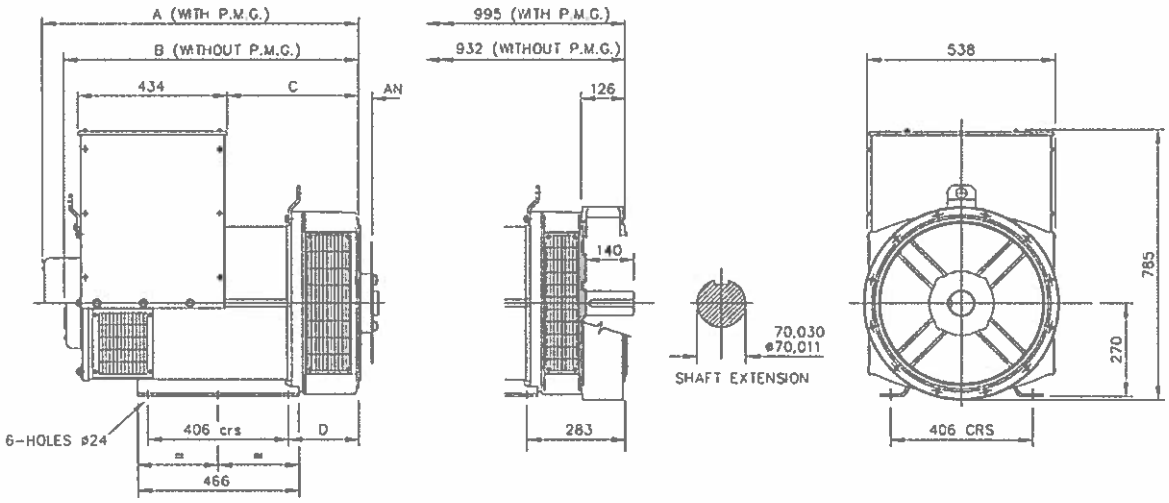

SINGLE BEARING ADAPTORS				
ADAPTOR	A	B	C	D
SAE 1	928,3	865,3	389,3	216,3
SAE 2	914	851	375	202
SAE 3	914	851	375	202

COUPLING DISCS	
DISC	AN
SAE 10	53,98
SAE 11,5	39,68
SAE 14	25,40

REGULAR SESSION CITY COUNCIL MEETING PACKET FOR THE MEETING TO BE HELD ON SEPTEMBER 20, 2021

REGULAR SESSION CITY COUNCIL MEETING PACKET FOR THE MEETING TO BE HELD ON SEPTEMBER 20, 2021

APPROVED DOCUMENT

STAMFORD

Head Office Address:
Barnack Road, Stamford
Lincolnshire, PE9 2NB
United Kingdom
Tel: +44 (0) 1780 484000
Fax: +44 (0) 1780 484100

www.cumminsgeneratortechnologies.com

Copyright 2010, Cummins Generator Technologies Ltd, All Rights Reserved
Stamford and AvK are registered trade marks of Cummins Generator Technologies Ltd
Cummins and the Cummins logo are registered trade marks of Cummins Inc.

STAMFORD

UCI274E - Winding 311

Technical Data Sheet

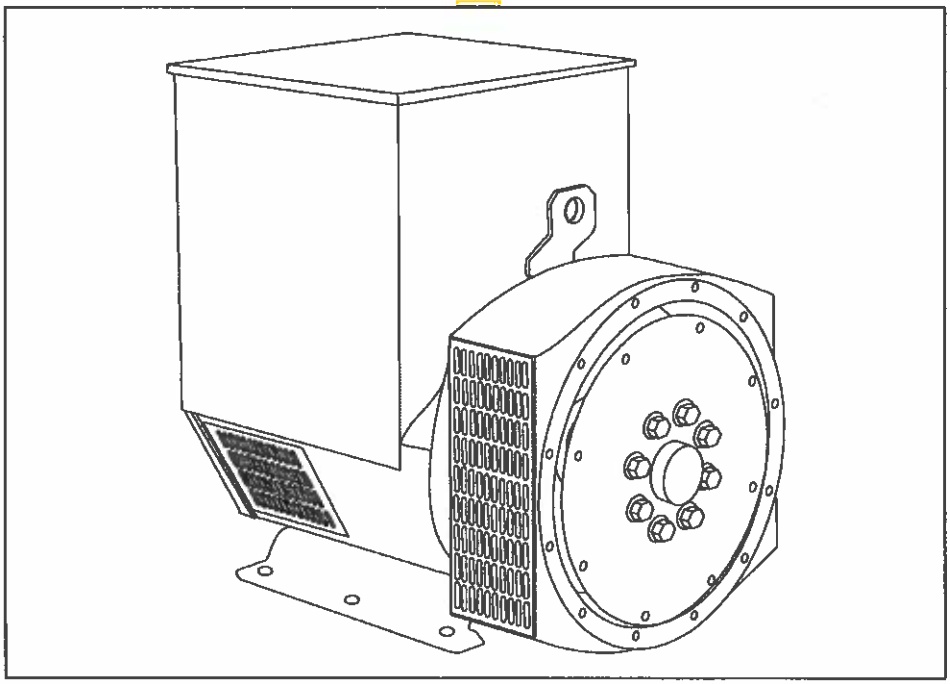

REGULAR SESSION CITY COUNCIL MEETING PACKET FOR THE MEETING TO BE HELD ON SEPTEMBER 20, 2021

REGULAR SESSION CITY COUNCIL MEETING PACKET FOR THE MEETING TO BE HELD ON SEPTEMBER 20, 2021

APPROVED DOCUMENT

STANDARDS

Stamford industrial generators meet the requirements of BS EN 60034 and the relevant section of other international standards such as BS5000, VDE 0530, NEMA MG1-32, IEC34, CSA C22.2-100, AS1359.
Other standards and certifications can be considered on request.

VOLTAGE REGULATORS

SX460 AVR - STANDARD

With this self excited control system the main stator supplies power via the Automatic Voltage Regulator (AVR) to the exciter stator. The high efficiency semiconductors of the AVR ensure positive build-up from initial low levels of residual voltage.
The exciter rotor output is fed to the main rotor through a three phase full wave bridge rectifier. This rectifier is protected by a surge suppressor against surges caused, for example, by short circuit.

AS440 AVR

With this self-excited system the main stator provides power via the AVR to the exciter stator. The high efficiency semi-conductors of the AVR ensure positive build-up from initial low levels of residual voltage.
The exciter rotor output is fed to the main rotor through a three-phase full-wave bridge rectifier. The rectifier is protected by a surge suppressor against surges caused, for example, by short circuit or out-of-phase paralleling.
The AS440 will support a range of electronic accessories, including a 'droop' Current Transformer (CT) to permit parallel operation with other ac generators.

MX341 AVR

This sophisticated AVR is incorporated into the Stamford Permanent Magnet Generator (PMG) control system.
The PMG provides power via the AVR to the main exciter, giving a source of constant excitation power independent of generator output. The main exciter output is then fed to the main rotor, through a full wave bridge, protected by a surge suppressor. The AVR has in-built protection against sustained over-excitation, caused by internal or external faults. This de-excites the machine after a minimum of 5 seconds.
An engine relief load acceptance feature can enable full load to be applied to the generator in a single step.
If three-phase sensing is required with the PMG system the MX321 AVR must be used.
We recommend three-phase sensing for applications with greatly unbalanced or highly non-linear loads.

MX321 AVR

The most sophisticated of all our AVRs combines all the features of the MX341 with, additionally, three-phase rms sensing, for improved regulation and performance.
Over voltage protection is built-in and short circuit current level adjustments is an optional facility.

WINDINGS & ELECTRICAL PERFORMANCE

All generator stators are wound to 2/3 pitch. This eliminates triplen (3rd, 9th, 15th ...) harmonics on the voltage waveform and is found to be the optimum design for trouble-free supply of non-linear loads. The 2/3 pitch design avoids excessive neutral currents sometimes seen with higher winding pitches, when in parallel with the mains. A fully connected damper winding reduces oscillations during paralleling. This winding, with the 2/3 pitch and carefully selected pole and tooth designs, ensures very low waveform distortion.

TERMINALS & TERMINAL BOX

Standard generators are 3-phase reconnectable with 12 ends brought out to the terminals, which are mounted on a cover at the non-drive end of the generator. A sheet steel terminal box contains the AVR and provides ample space for the customers' wiring and gland arrangements. It has removable panels for easy access.

SHAFT & KEYS

All generator rotors are dynamically balanced to better than BS6861:Part 1 Grade 2.5 for minimum vibration in operation. Two bearing generators are balanced with a half key.

INSULATION/IMPREGNATION

The insulation system is class 'H'.
All wound components are impregnated with materials and processes designed specifically to provide the high build required for static windings and the high mechanical strength required for rotating components.

QUALITY ASSURANCE

Generators are manufactured using production procedures having a quality assurance level to BS EN ISO 9001.

The stated voltage regulation may not be maintained in the presence of certain radio transmitted signals. Any change in performance will fall within the limits of Criteria 'B' of EN 61000-6-2:2001. At no time will the steady-state voltage regulation exceed 2%.

DE RATES

All values tabulated on page 8 are subject to the following reductions

5% when air inlet filters are fitted.
3% for every 500 metres by which the operating altitude exceeds 1000 metres above mean sea level.
3% for every 5°C by which the operational ambient temperature exceeds 40°C.
Note: Requirement for operating in an ambient exceeding 60°C must be referred to the factory.

NB Continuous development of our products entitles us to change specification details without notice, therefore they must not be regarded as binding.

Front cover drawing typical of product range.

UCI274E

STAMFORD

WINDING 311

CONTROL SYSTEM	SEPARATELY EXCITED BY P.M.G.		
A.V.R.	MX321	MX341	
VOLTAGE REGULATION	± 0.5 %	± 1.0 %	With 4% ENGINE GOVERNING
SUSTAINED SHORT CIRCUIT	REFER TO SHORT CIRCUIT DECREMENT CURVES (page 7)		

CONTROL SYSTEM	SELF EXCITED		
A.V.R.	SX460	AS440	
VOLTAGE REGULATION	± 1.0 %	± 1.0 %	With 4% ENGINE GOVERNING
SUSTAINED SHORT CIRCUIT	SERIES 4 CONTROL DOES NOT SUSTAIN A SHORT CIRCUIT CURRENT		

INSULATION SYSTEM	CLASS H							
PROTECTION	IP23							
RATED POWER FACTOR	0.8							
STATOR WINDING	DOUBLE LAYER CONCENTRIC							
WINDING PITCH	TWO THIRDS							
WINDING LEADS	12							
STATOR WDG. RESISTANCE	0.0317 Ohms PER PHASE AT 22°C SERIES STAR CONNECTED							
ROTOR WDG. RESISTANCE	1.34 Ohms at 22°C							
EXCITER STATOR RESISTANCE	20 Ohms at 22°C							
EXCITER ROTOR RESISTANCE	0.091 Ohms PER PHASE AT 22°C							
R.F.I. SUPPRESSION	BS EN 61000-6-2 & BS EN 61000-6-4,VDE 0875G, VDE 0875N. refer to factory for others							
WAVEFORM DISTORTION	NO LOAD < 1.5% NON-DISTORTING BALANCED LINEAR LOAD < 5.0%							
MAXIMUM OVERSPEED	2250 Rev/Min							
BEARING DRIVE END	BALL. 6315-2RS (ISO)							
BEARING NON-DRIVE END	BALL. 6310-2RS (ISO)							
	1 BEARING				2 BEARING			
WEIGHT COMP. GENERATOR	492 kg				511 kg			
WEIGHT WOUND STATOR	180 kg				180 kg			
WEIGHT WOUND ROTOR	167.51 kg				156.55 kg			
WR² INERTIA	1.3271 kgm²				1.2765 kgm²			
SHIPPING WEIGHTS in a crate	525 kg				539 kg			
PACKING CRATE SIZE	123 x 67 x 103(cm)				123 x 67 x 103(cm)			
	50 Hz				60 Hz			
TELEPHONE INTERFERENCE	THF<2%				TIF<50			
COOLING AIR	0.514 m³/sec 1090 cfm				0.617 m³/sec 1308 cfm			
VOLTAGE SERIES STAR	380/220	400/231	415/240	440/254	416/240	440/254	460/266	480/277
VOLTAGE PARALLEL STAR	190/110	200/115	208/120	220/127	208/120	220/127	230/133	240/138
VOLTAGE SERIES DELTA	220/110	230/115	240/120	254/127	240/120	254/127	266/133	277/138
kVA BASE RATING FOR REACTANCE VALUES	140	140	140	N/A	160	167.5	167.5	178.8
Xd DIR. AXIS SYNCHRONOUS	2.34	2.11	1.96	-	2.68	2.51	2.29	2.25
X'd DIR. AXIS TRANSIENT	0.21	0.19	0.18	-	0.25	0.23	0.21	0.21
X"d DIR. AXIS SUBTRANSIENT	0.14	0.13	0.12	-	0.17	0.16	0.15	0.14
Xq QUAD. AXIS REACTANCE	1.53	1.38	1.28	-	1.74	1.63	1.49	1.46
X"q QUAD. AXIS SUBTRANSIENT	0.18	0.16	0.15	-	0.22	0.21	0.19	0.18
X_L LEAKAGE REACTANCE	0.08	0.08	0.07	-	0.09	0.08	0.08	0.08
X_2 NEGATIVE SEQUENCE	0.16	0.14	0.13	-	0.19	0.18	0.16	0.16
X_0 ZERO SEQUENCE	0.10	0.09	0.08	-	0.11	0.10	0.09	0.09
REACTANCES ARE SATURATED	VALUES ARE PER UNIT AT RATING AND VOLTAGE INDICATED							
T'd TRANSIENT TIME CONST.	0.032 s							
T"d SUB-TRANSTIME CONST.	0.01 s							
T'do O.C. FIELD TIME CONST.	0.85 s							
Ta ARMATURE TIME CONST.	0.007 s							
SHORT CIRCUIT RATIO	1/Xd							

PREVIEW

REGULAR SESSION CITY COUNCIL MEETING PACKET FOR THE MEETING TO BE HELD ON SEPTEMBER 20, 2021

50 Hz

UCI274E

Winding 311

STAMFORD

THREE PHASE EFFICIENCY CURVES

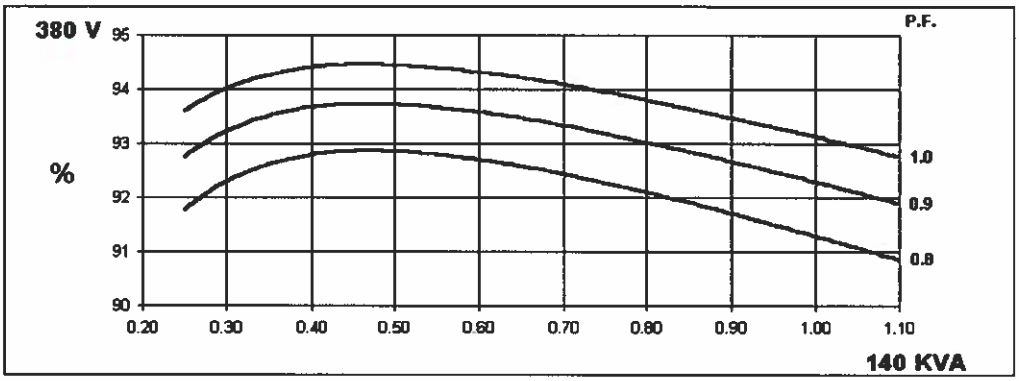

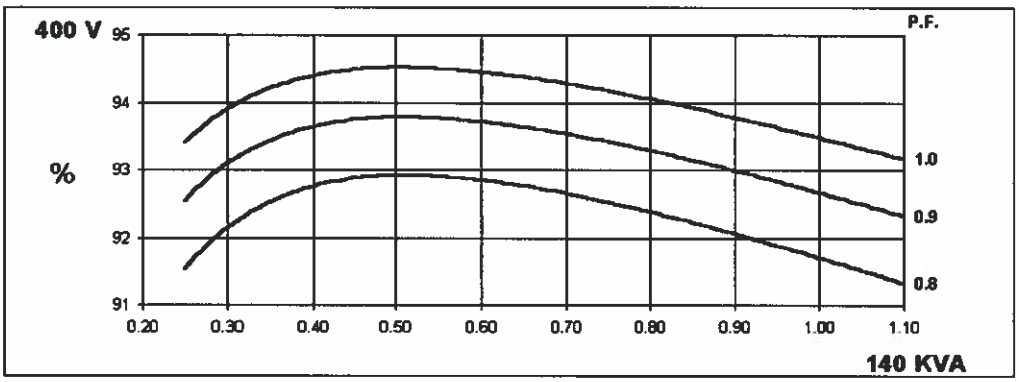

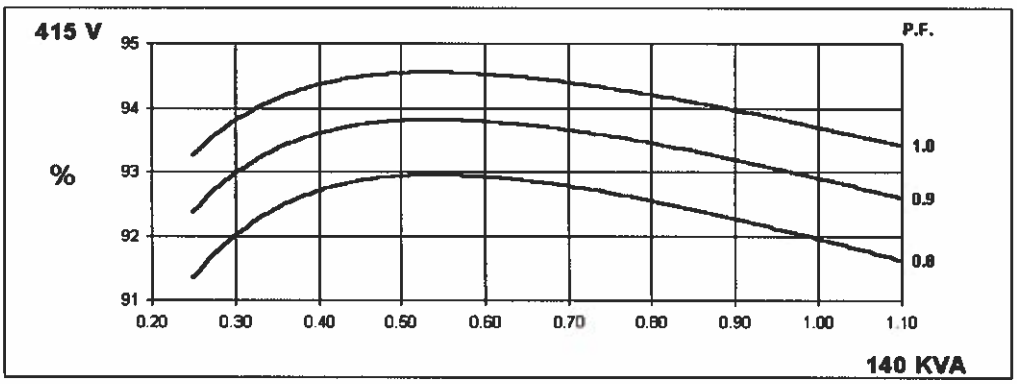

REGULAR SESSION CITY COUNCIL MEETING PACKET FOR THE MEETING TO BE HELD ON SEPTEMBER 20, 2021

60 Hz

UCI274E

Winding 311

STAMFORD

THREE PHASE EFFICIENCY CURVES

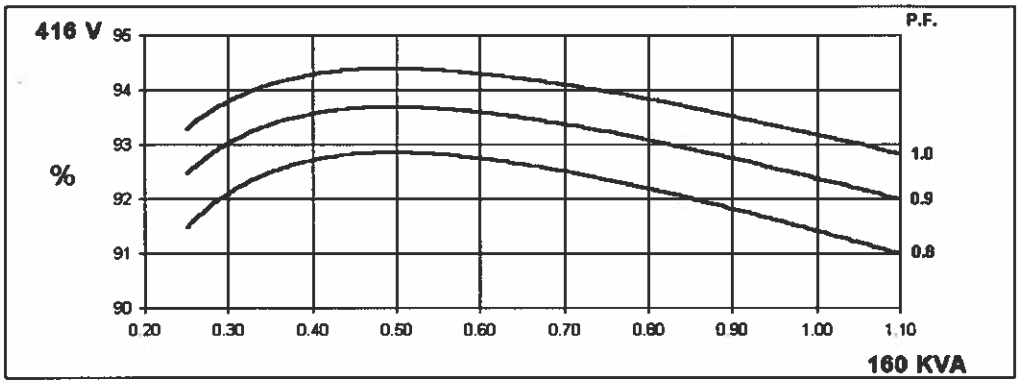

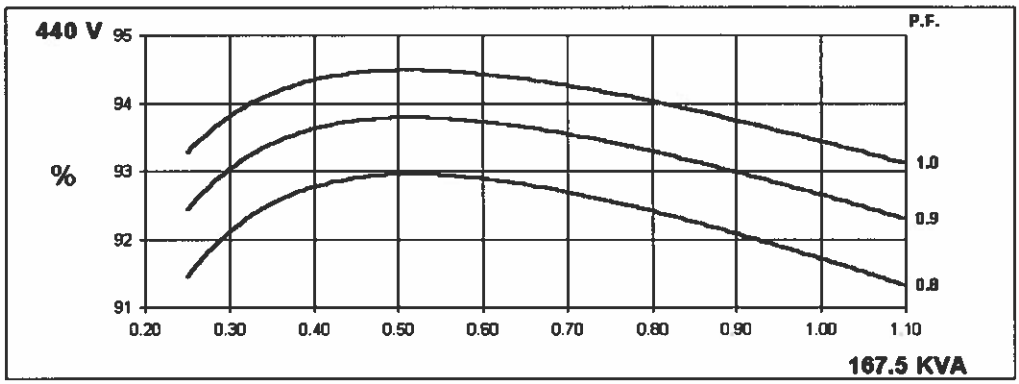

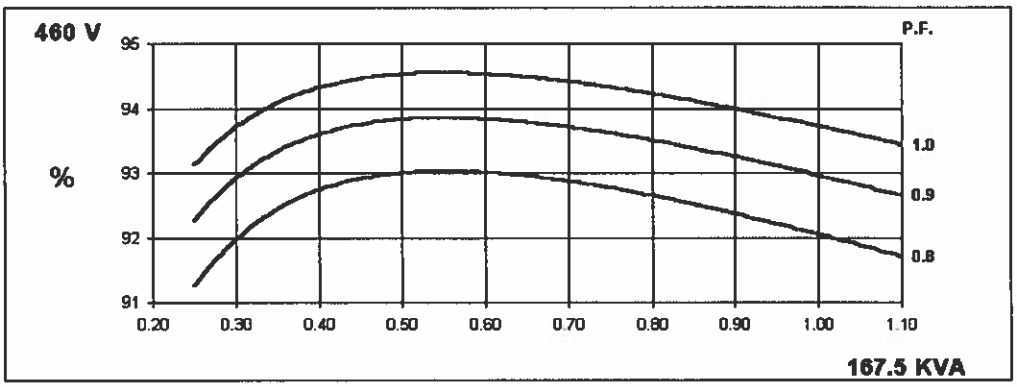

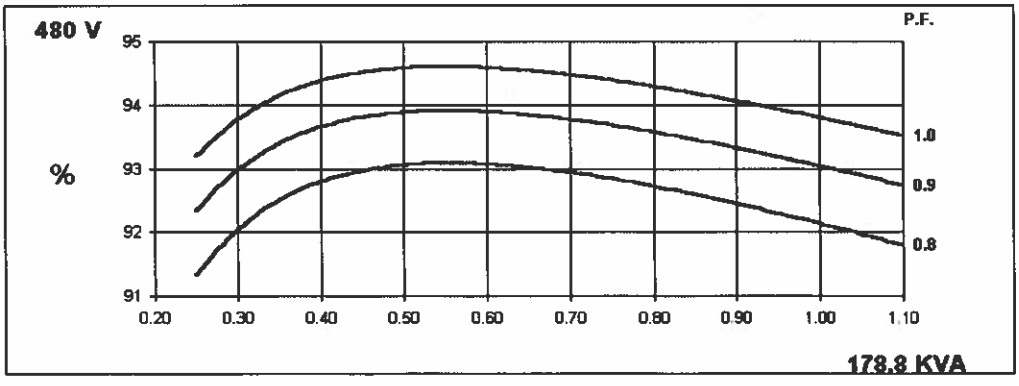

REGULAR SESSION CITY COUNCIL MEETING PACKET FOR THE MEETING TO BE HELD ON SEPTEMBER 20, 2021

UCI274E

STAMFORD

Winding 311

Locked Rotor Motor Starting Curve

50 Hz

MX

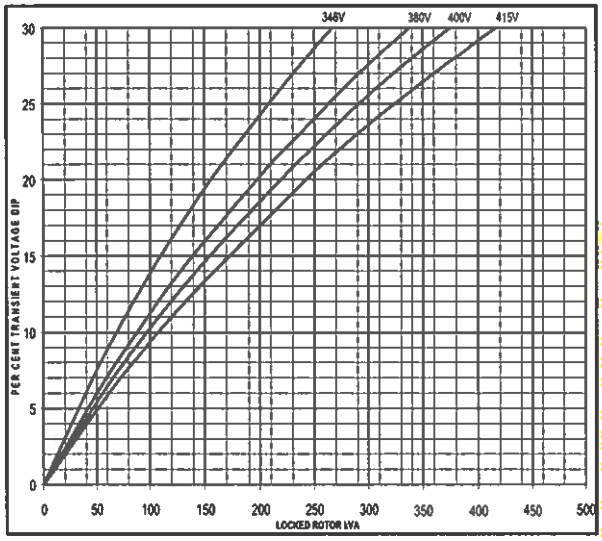

SX

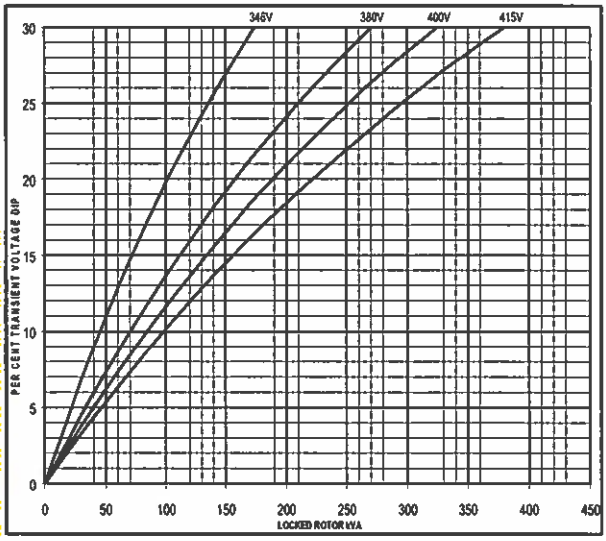

60 Hz

MX

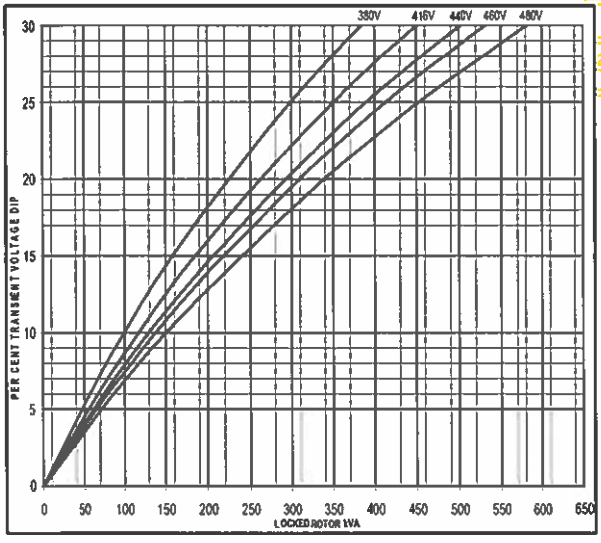

SX

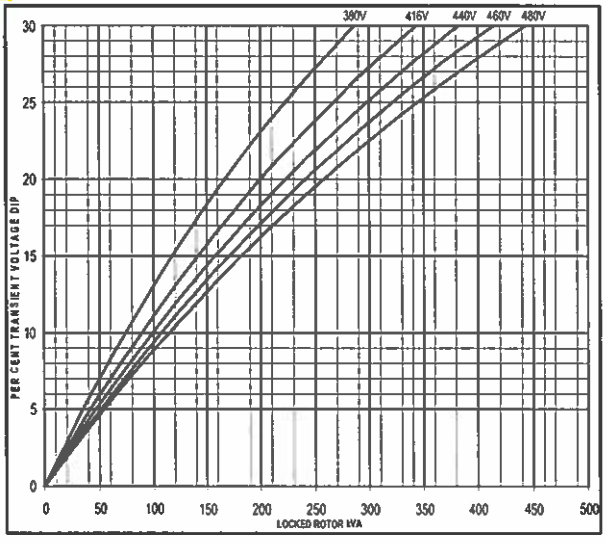

ADDITIONAL DOCUMENT

REGULAR SESSION CITY COUNCIL MEETING PACKET FOR THE MEETING TO BE HELD ON SEPTEMBER 20, 2021

Three-phase Short Circuit Decrement Curve. No-load Excitation at Rated Speed
Based on star (wye) connection.

50 Hz

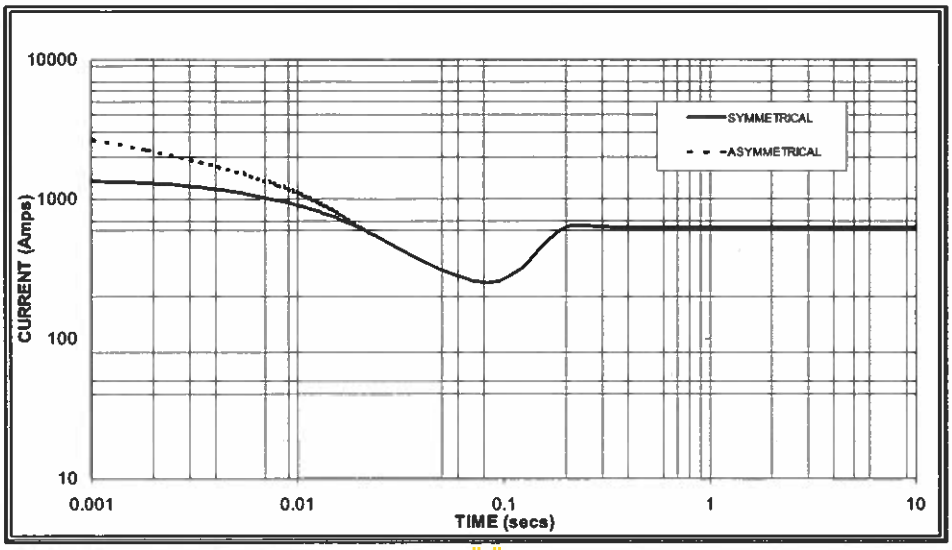

Sustained Short Circuit = 630 Amps

60 Hz

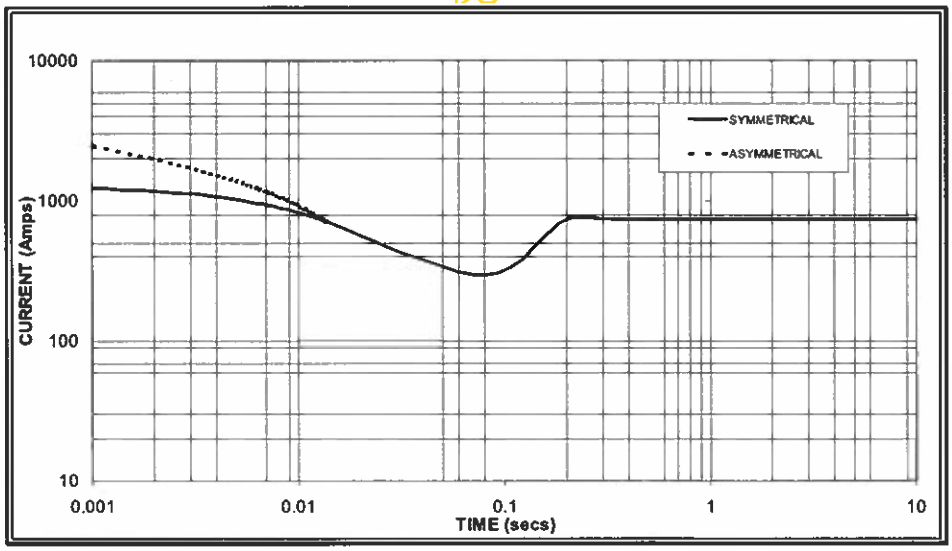

Sustained Short Circuit = 740 Amps

Note 1
The following multiplication factors should be used to adjust the values from curve between time 0.001 seconds and the minimum current point in respect of nominal operating voltage :

50Hz		60Hz	
Voltage	Factor	Voltage	Factor
380v	X 1.00	416v	X 1.00
400v	X 1.07	440v	X 1.06
415v	X 1.12	460v	X 1.12
		480v	X 1.17

The sustained current value is constant irrespective of voltage level

Note 2
The following multiplication factor should be used to convert the values calculated in accordance with NOTE 1 to those applicable to the various types of short circuit :

	3-phase	2-phase L-L	1-phase L-N
Instantaneous	x 1.00	x 0.87	x 1.30
Minimum	x 1.00	x 1.80	x 3.20
Sustained	x 1.00	x 1.50	x 2.50
Max. sustained duration	10 sec.	5 sec.	2 sec.

All other times are unchanged

Note 3
Curves are drawn for Star (Wye) connected machines. For other connection the following multipliers should be applied to current values as shown :
Parallel Star = Curve current value X 2
Series Delta = Curve current value X 1.732

REGULAR SESSION CITY COUNCIL MEETING PACKET FOR THE MEETING TO BE HELD ON SEPTEMBER 20, 2021

UCI274E

STAMFORD

Winding 311 / 0.8 Power Factor

RATINGS

	Class - Temp Rise	Cont. F - 105/40°C				Cont. H - 125/40°C				Standby - 150/40°C				Standby - 163/27°C			
50 Hz	Series Star (V)	380	400	415	440	380	400	415	440	380	400	415	440	380	400	415	440
	Parallel Star (V)	190	200	208	220	190	200	208	220	190	200	208	220	190	200	208	220
	Series Delta (V)	220	230	240	254	220	230	240	254	220	230	240	254	220	230	240	254
	kVA	125.0	125.0	125.0	N/A	140.0	140.0	140.0	N/A	145.0	145.0	145.0	N/A	150.0	150.0	150.0	N/A
	kW	100.0	100.0	100.0	N/A	112.0	112.0	112.0	N/A	116.0	116.0	116.0	N/A	120.0	120.0	120.0	N/A
	Efficiency (%)	91.7	92.1	92.3	N/A	91.3	91.7	92.0	N/A	91.1	91.6	91.8	N/A	91.0	91.4	91.7	N/A
	kW Input	109.1	108.6	108.3	N/A	122.7	122.1	121.7	N/A	127.3	126.6	126.4	N/A	131.9	131.3	130.9	N/A
60 Hz	Series Star (V)	416	440	460	480	416	440	460	480	416	440	460	480	416	440	460	480
	Parallel Star (V)	208	220	230	240	208	220	230	240	208	220	230	240	208	220	230	240
	Series Delta (V)	240	254	266	277	240	254	266	277	240	254	266	277	240	254	266	277
	kVA	140.0	143.8	143.8	160.0	160.0	167.5	167.5	178.8	170.0	175.0	175.0	187.5	175.0	181.3	181.3	193.8
	kW	112.0	115.0	115.0	128.0	128.0	134.0	134.0	143.0	136.0	140.0	140.0	150.0	140.0	145.0	145.0	155.0
	Efficiency (%)	91.9	92.2	92.5	92.5	91.4	91.7	92.1	92.1	91.2	91.5	91.9	92.0	91.0	91.4	91.8	91.9
	kW Input	121.9	124.8	124.4	138.4	140.0	146.1	145.5	155.3	149.1	153.0	152.3	163.0	153.8	158.7	158.0	168.7

APPROVED DCC

DIMENSIONS

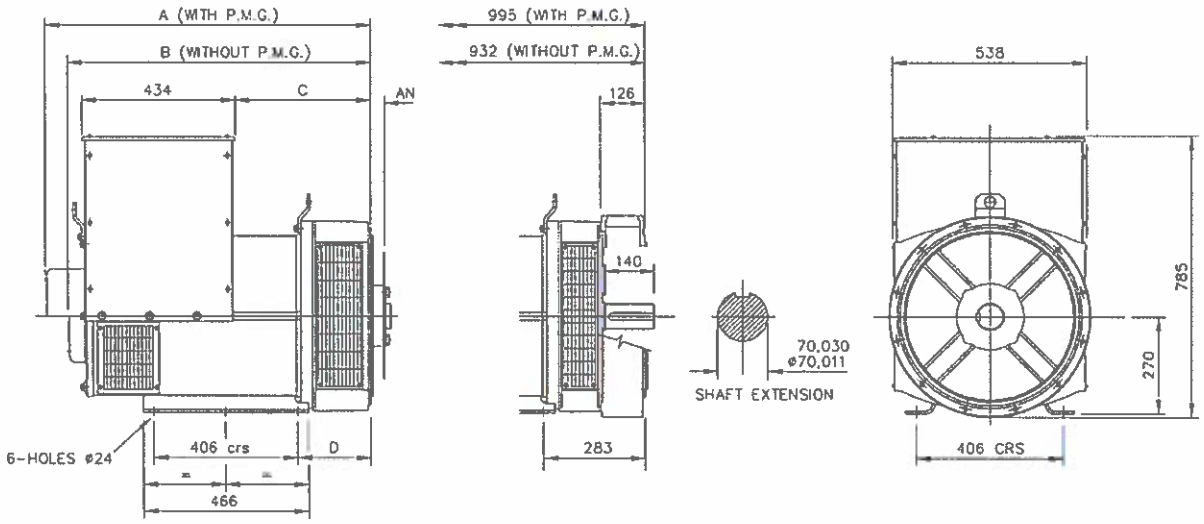

SINGLE BEARING ADAPTORS				
ADAPTOR	A	B	C	D
SAE 1	928,3	865,3	389,3	216,3
SAE 2	914	851	375	202
SAE 3	914	851	375	202

COUPLING DISCS	
DISC	AN
SAE 10	53,98
SAE 11,5	39,68
SAE 14	25,40

REGULAR SESSION CITY COUNCIL MEETING PACKET FOR THE MEETING TO BE HELD ON SEPTEMBER 20, 2021

REGULAR SESSION CITY COUNCIL MEETING PACKET FOR THE MEETING TO BE HELD ON SEPTEMBER 20, 2021

APPROVED DOCUMENT

STAMFORD

Head Office Address:
Barnack Road, Stamford
Lincolnshire, PE9 2NB
United Kingdom
Tel: +44 (0) 1780 484000
Fax: +44 (0) 1780 484100

www.cumminsgeneratortechnologies.com

Copyright 2010, Cummins Generator Technologies Ltd. All Rights Reserved
Stamford and AvK are registered trade marks of Cummins Generator Technologies Ltd
Cummins and the Cummins logo are registered trade marks of Cummins Inc.

STAMFORD®

UCI274E - Winding 17

Technical Data Sheet

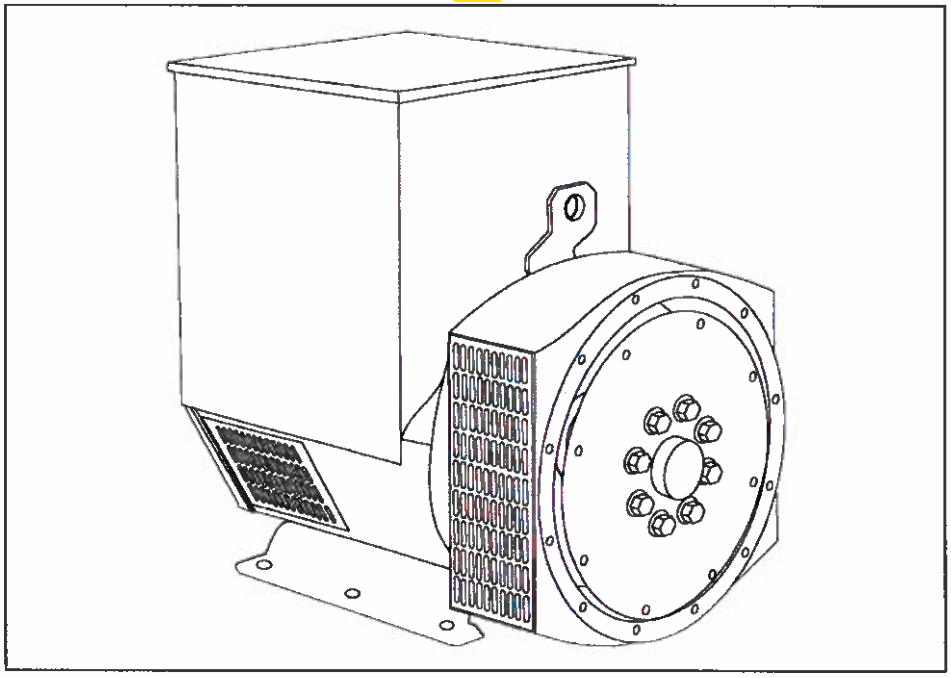

REGULAR SESSION CITY COUNCIL MEETING PACKET FOR THE MEETING TO BE HELD ON SEPTEMBER 20, 2021

SPECIFICATIONS & OPTIONS

STANDARDS

Stamford industrial generators meet the requirements of BS EN 60034 and the relevant section of other international standards such as BS5000, VDE 0530, NEMA MG1-32, IEC34, CSA C22.2-100, AS1359.
Other standards and certifications can be considered on request.

VOLTAGE REGULATORS

SX460 AVR - STANDARD

With this self excited control system the main stator supplies power via the Automatic Voltage Regulator (AVR) to the exciter stator. The high efficiency semiconductors of the AVR ensure positive build-up from initial low levels of residual voltage.
The exciter rotor output is fed to the main rotor through a three phase full wave bridge rectifier. This rectifier is protected by a surge suppressor against surges caused, for example, by short circuit.

AS440 AVR

With this self-excited system the main stator provides power via the AVR to the exciter stator. The high efficiency semi-conductors of the AVR ensure positive build-up from initial low levels of residual voltage.
The exciter rotor output is fed to the main rotor through a three-phase full-wave bridge rectifier. The rectifier is protected by a surge suppressor against surges caused, for example, by short circuit or out-of-phase paralleling.
The AS440 will support a range of electronic accessories, including a 'droop' Current Transformer (CT) to permit parallel operation with other ac generators.

MX341 AVR

This sophisticated AVR is incorporated into the Stamford Permanent Magnet Generator (PMG) control system.
The PMG provides power via the AVR to the main exciter, giving a source of constant excitation power independent of generator output. The main exciter output is then fed to the main rotor, through a full wave bridge, protected by a surge suppressor. The AVR has in-built protection against sustained over-excitation, caused by internal or external faults. This de-excites the machine after a minimum of 5 seconds.
An engine relief load acceptance feature can enable full load to be applied to the generator in a single step.
If three-phase sensing is required with the PMG system the MX321 AVR must be used.
We recommend three-phase sensing for applications with greatly unbalanced or highly non-linear loads.

MX321 AVR

The most sophisticated of all our AVRs combines all the features of the MX341 with, additionally, three-phase rms sensing, for improved regulation and performance.
Over voltage protection is built-in and short circuit current level adjustments is an optional facility.

WINDINGS & ELECTRICAL PERFORMANCE

All generator stators are wound to 2/3 pitch. This eliminates triplen (3rd, 9th, 15th ...) harmonics on the voltage waveform and is found to be the optimum design for trouble-free supply of non-linear loads. The 2/3 pitch design avoids excessive neutral currents sometimes seen with higher winding pitches, when in parallel with the mains. A fully connected damper winding reduces oscillations during paralleling. This winding, with the 2/3 pitch and carefully selected pole and tooth designs, ensures very low waveform distortion.

TERMINALS & TERMINAL BOX

Standard generators are 3-phase reconnectable with 12 ends brought out to the terminals, which are mounted on a cover at the non-drive end of the generator. A sheet steel terminal box contains the AVR and provides ample space for the customers' wiring and gland arrangements. It has removable panels for easy access.

SHAFT & KEYS

All generator rotors are dynamically balanced to better than BS6861:Part 1 Grade 2.5 for minimum vibration in operation.

INSULATION/IMPREGNATION

The insulation system is class 'H'.
All wound components are impregnated with materials and processes designed specifically to provide the high build required for static windings and the high mechanical strength required for rotating components.

QUALITY ASSURANCE

Generators are manufactured using production procedures having a quality assurance level to BS EN ISO 9001.

The stated voltage regulation may not be maintained in the presence of certain radio transmitted signals. Any change in performance will fall within the limits of Criteria 'B' of EN 61000-6-2:2001. At no time will the steady-state voltage regulation exceed 2%.

DE RATES

All values tabulated on page 6 are subject to the following reductions

5% when air inlet filters are fitted.
3% for every 500 metres by which the operating altitude exceeds 1000 metres above mean sea level.
3% for every 5 C by which the operational ambient temperature exceeds 40 C.
Note: Requirement for operating in an ambient exceeding 60 C must be referred to the factory.

NB Continuous development of our products entitles us to change specification details without notice, therefore they must not be regarded as binding.

Front cover drawing typical of product range.

APPROVED DOCUMENT

REGULAR SESSION CITY COUNCIL MEETING PACKET FOR THE MEETING TO BE HELD ON SEPTEMBER 20, 2021

UCI274E

STAMFORD

WINDING 17

CONTROL SYSTEM	SEPARATELY EXCITED BY P.M.G.		
A.V.R.	MX321	MX341	
VOLTAGE REGULATION	± 0.5 %	± 1.0 %	With 4% ENGINE GOVERNING
SUSTAINED SHORT CIRCUIT	REFER TO SHORT CIRCUIT DECREMENT CURVES (page 5)		

CONTROL SYSTEM	SELF EXCITED		
A.V.R.	SX460	AS440	
VOLTAGE REGULATION	± 1.5 %	± 1.0 %	With 4% ENGINE GOVERNING
SUSTAINED SHORT CIRCUIT	SERIES 4 CONTROL DOES NOT SUSTAIN A SHORT CIRCUIT CURRENT		

INSULATION SYSTEM	CLASS H	
PROTECTION	IP23	
RATED POWER FACTOR	0.8	
STATOR WINDING	DOUBLE LAYER CONCENTRIC	
WINDING PITCH	TWO THIRDS	
WINDING LEADS	12	
STATOR WDG. RESISTANCE	0.05 Ohms PER PHASE AT 22°C SERIES STAR CONNECTED	
ROTOR WDG. RESISTANCE	1.34 Ohms at 22°C	
EXCITER STATOR RESISTANCE	20 Ohms at 22°C	
EXCITER ROTOR RESISTANCE	0.091 Ohms PER PHASE AT 22°C	
R.F.I. SUPPRESSION	BS EN 61000-6-2 & BS EN 61000-6-4,VDE 0875G, VDE 0875N. refer to factory for others	
WAVEFORM DISTORTION	NO LOAD < 1.5% NON-DISTORTING BALANCED LINEAR LOAD < 5.0%	
MAXIMUM OVERSPEED	2250 Rev/Min	
BEARING DRIVE END	BALL. 6315-2RS (ISO)	
BEARING NON-DRIVE END	BALL. 6310-2RS (ISO)	
	1 BEARING	2 BEARING
WEIGHT COMP. GENERATOR	492 kg	511 kg
WEIGHT WOUND STATOR	180 kg	180 kg
WEIGHT WOUND ROTOR	167.51 kg	156.55 kg
WR² INERTIA	1.3271 kgm^2	1.2765 kgm^2
SHIPPING WEIGHTS in a crate	525 kg	539 kg
PACKING CRATE SIZE	123 x 67 x 103(cm)	123 x 67 x 103(cm)
TELEPHONE INTERFERENCE	THF<2%	TIF<50
COOLING AIR	0.617 m^3/sec 1308 cfm	
VOLTAGE SERIES STAR	600V	
VOLTAGE PARALLEL STAR	300V	
VOLTAGE SERIES DELTA	346V	
kVA BASE RATING FOR REACTANCE VALUES	178.8	
Xd DIR. AXIS SYNCHRONOUS	2.06	
X'd DIR. AXIS TRANSIENT	0.18	
X"d DIR. AXIS SUBTRANSIENT	0.13	
Xq QUAD. AXIS REACTANCE	1.34	
X"q QUAD. AXIS SUBTRANSIENT	0.17	
X_L LEAKAGE REACTANCE	0.07	
X_2 NEGATIVE SEQUENCE	0.14	
X_0 ZERO SEQUENCE	0.09	
REACTANCES ARE SATURATED	VALUES ARE PER UNIT AT RATING AND VOLTAGE INDICATED	
T'd TRANSIENT TIME CONST.	0.032s	
T"d SUB-TRANSTIME CONST.	0.01s	
T'do O.C. FIELD TIME CONST.	0.85s	
Ta ARMATURE TIME CONST.	0.007s	
SHORT CIRCUIT RATIO	1/Xd	

AFTER PRODUCTION

REGULAR SESSION CITY COUNCIL MEETING PACKET FOR THE MEETING TO BE HELD ON SEPTEMBER 20, 2021

UCI274E

STAMFORD

Winding 17

SX

Locked Rotor Motor Starting Curves

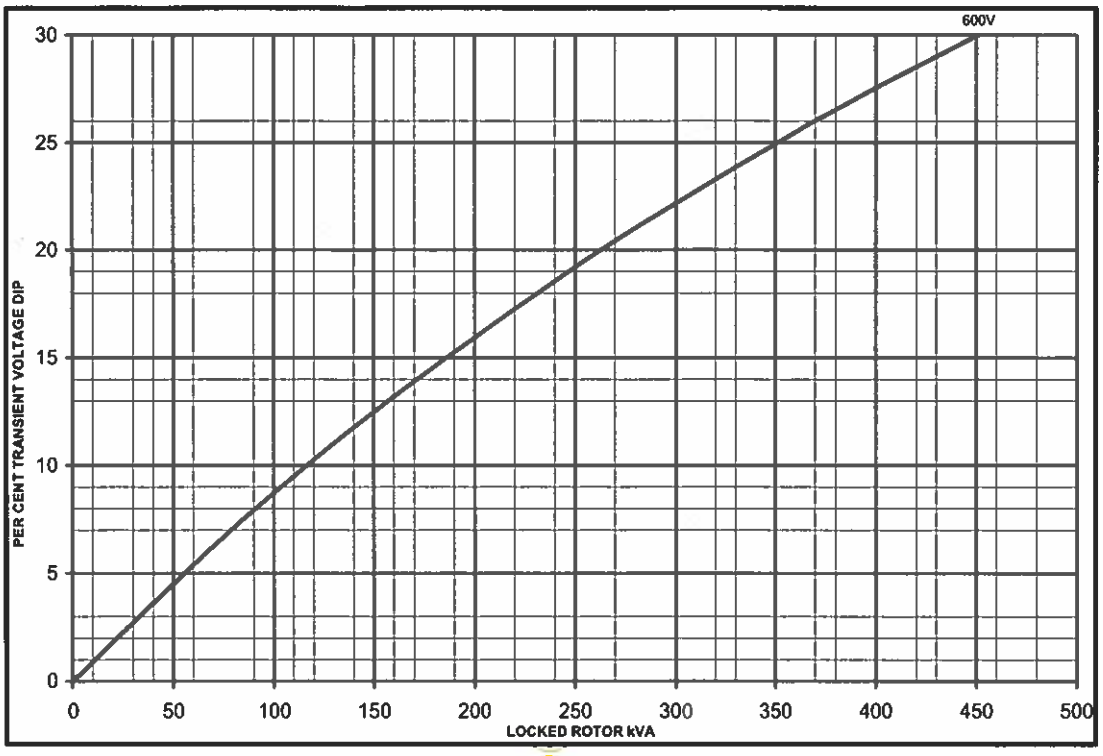

MX

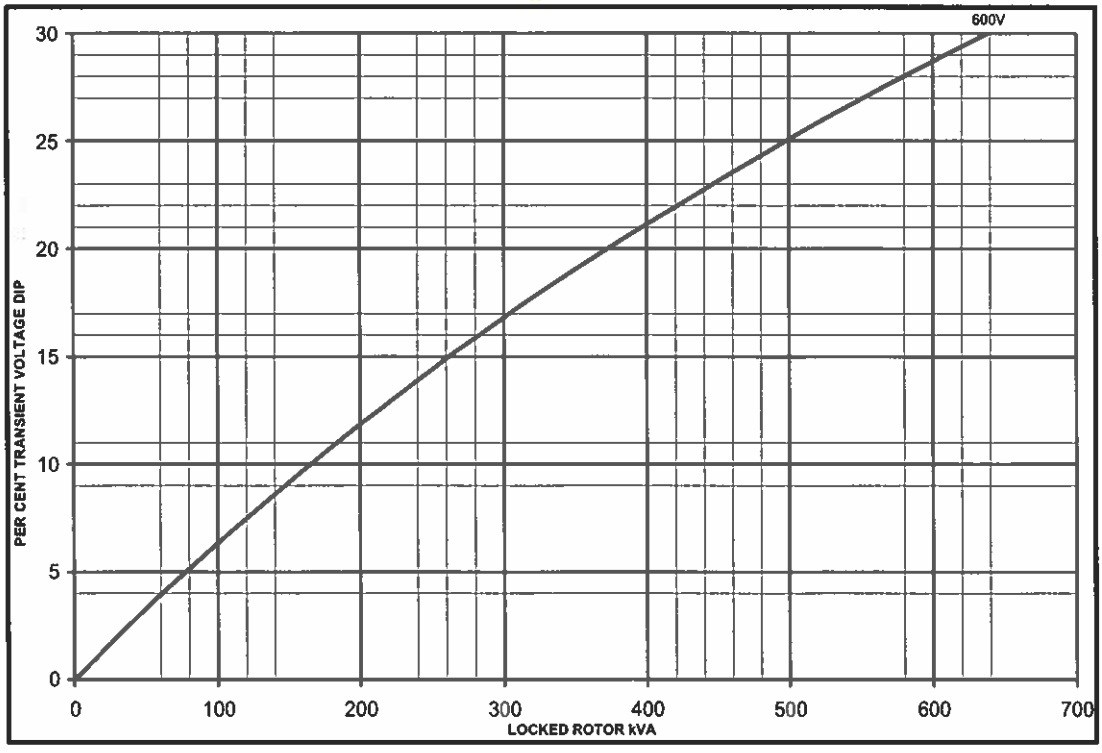

UCI274E

REGULAR SESSION CITY COUNCIL MEETING PACKET FOR THE MEETING TO BE HELD ON SEPTEMBER 20, 2021

UCI274E
Winding 17

STAMFORD

THREE PHASE EFFICIENCY CURVES

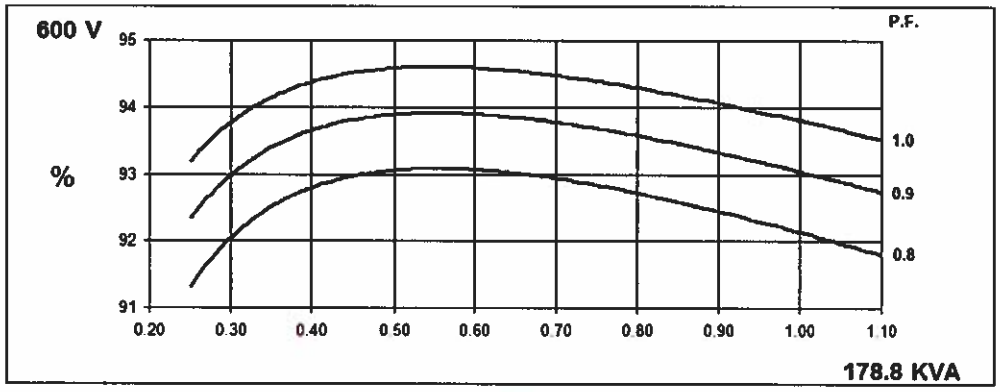

Three-phase Short Circuit Decrement Curve. No-load Excitation at Rated Speed
Based on star (wye) connection.

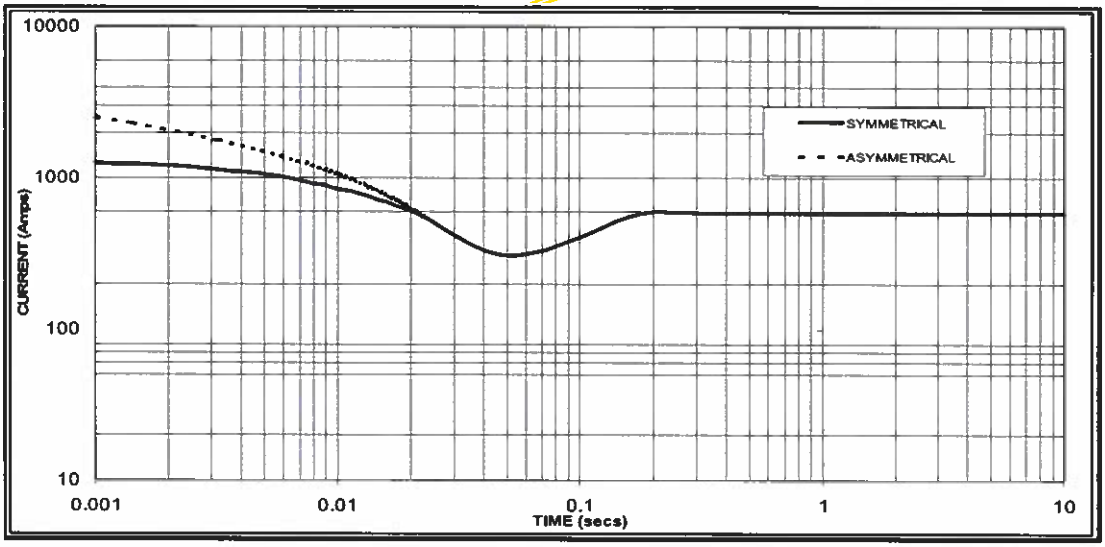

Sustained Short Circuit = 580 Amps

Note
The following multiplication factor should be used to convert the values from curve for the various types of short circuit :

	3-phase	2-phase L-L	1-phase L-N
Instantaneous	x 1.00	x 0.87	x 1.30
Minimum	x 1.00	x 1.80	x 3.20
Sustained	x 1.00	x 1.50	x 2.50
Max. sustained duration	10 sec.	5 sec.	2 sec.

All other times are unchanged

REGULAR SESSION CITY COUNCIL MEETING PACKET FOR THE MEETING TO BE HELD ON SEPTEMBER 20, 2021

UCI274E

STAMFORD

Winding 17 / 0.8 Power Factor

60Hz

RATINGS

Class - Temp Rise	Cont. F - 105/40°C	Cont. H - 125/40°C	Standby - 150/40°C	Standby - 163/27°C
Series Star (V)	600	600	600	600
Parallel Star (V)	300	300	300	300
Series Delta (V)	346	346	346	346
kVA	160.0	178.8	187.5	193.8
kW	128.0	143.0	150.0	155.0
Efficiency (%)	92.5	92.1	92.0	91.9
kW Input	138.4	155.2	163.1	168.8

APPROVED

DIMENSIONS

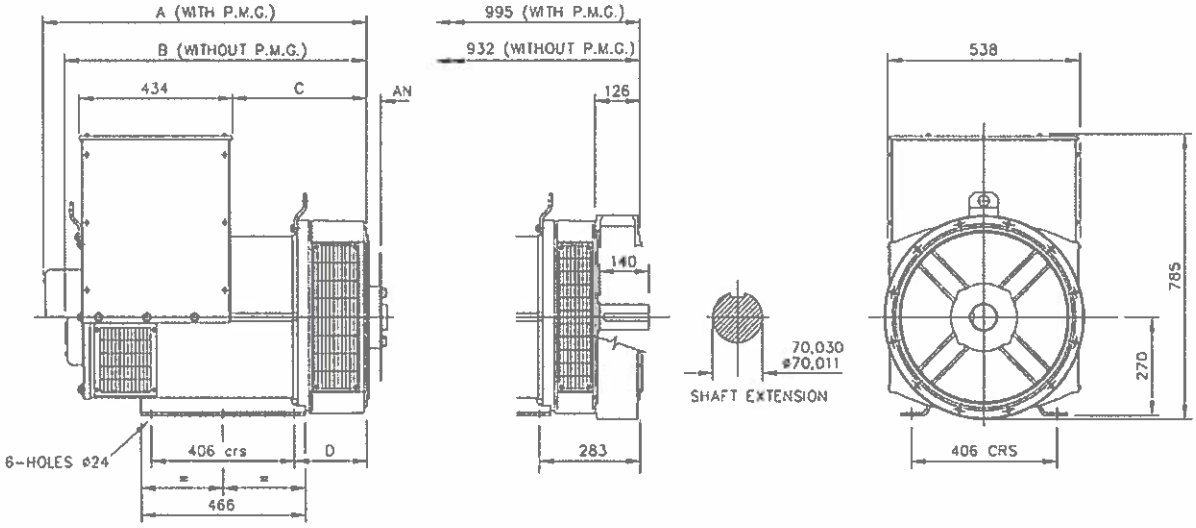

SINGLE BEARING ADAPTORS				
ADAPTOR	A	B	C	D
SAE 1	928.3	865.3	389.3	216.3
SAE 2	914	851	375	202
SAE 3	914	851	375	202

COUPLING DISCS	
DISC	AN
SAE 10	53.98
SAE 11.5	39.68
SAE 14	25.40

REGULAR SESSION CITY COUNCIL MEETING PACKET FOR THE MEETING TO BE HELD ON SEPTEMBER 20, 2021

REGULAR SESSION CITY COUNCIL MEETING PACKET FOR THE MEETING TO BE HELD ON SEPTEMBER 20, 2021

APPROVED DOCUMENT

STAMFORD

Head Office Address:
Barnack Road, Stamford
Lincolnshire, PE9 2NB
United Kingdom
Tel: +44 (0) 1780 484000
Fax: +44 (0) 1780 484100

www.cumminsgeneratortechnologies.com

Copyright 2010, Cummins Generator Technologies Ltd, All Rights Reserved
Stamford and AvK are registered trade marks of Cummins Generator Technologies Ltd
Cummins and the Cummins logo are registered trade marks of Cummins Inc.

DSEGenset

DSE

DSE7410/20

AUTO START & AUTO MAINS FAILURE MODULES

FEATURES

The DSE7410 is an Auto Start Control Module and the DSE7420 is an Auto Mains (Utility) Failure Control Module suitable for a wide variety of single, diesel or gas, gen-set applications.

A sophisticated module monitoring an extensive number of engine parameters, the DSE74xx will annunciate warnings, shutdown and engine status information on the back-lit LCD screen, illuminated LED, remote PC, audible alarm and via SMS text alerts. The module includes RS232, RS485 & Ethernet ports as well as dedicated terminals for system expansion.

The DSE7400 Series modules are compatible with electronic (CAN) and non-electronic (magnetic pick-up/alternator sensing) engines and offer a comprehensive number of flexible inputs, outputs and extensive engine protections so the system can be easily adapted to meet the most demanding industry paralleling requirements.

The modules can be easily configured using the DSE Configuration Suite Software. Selected front panel editing is also available.

ENVIRONMENTAL TESTING STANDARDS

ELECTRO-MAGNETIC COMPATIBILITY
BS EN 61000-6-2
EMC Generic Immunity Standard for the Industrial Environment
BS EN 61000-6-4
EMC Generic Emission Standard for the Industrial Environment

ELECTRICAL SAFETY
BS EN 60950
Safety of Information Technology Equipment, including Electrical Business Equipment

TEMPERATURE
BS EN 60068-2-1
Ab/Ae Cold Test -30 °C
BS EN 60068-2-2
Bb/Be Dry Heat +70 °C

VIBRATION
BS EN 60068-2-6
Ten sweeps in each of three major axes
5 Hz to 8 Hz @ +/-7.5 mm,
8 Hz to 500 Hz @ 2 gn

HUMIDITY
BS EN 60068-2-30
Db Damp Heat Cyclic 20/55 °C
@ 95% RH 48 Hours
BS EN 60068-2-78
Cab Damp Heat Static 40 °C
@ 93% RH 48 Hours

SHOCK
BS EN 60068-2-27
Three shocks in each of three major axes
15 gn in 11 mS

DEGREES OF PROTECTION PROVIDED BY ENCLOSURES
BS EN 60529
IP65 - Front of module when installed into the control panel with the supplied sealing gasket.

COMPREHENSIVE FEATURE LIST TO SUIT A WIDE VARIETY OF GEN-SET APPLICATIONS

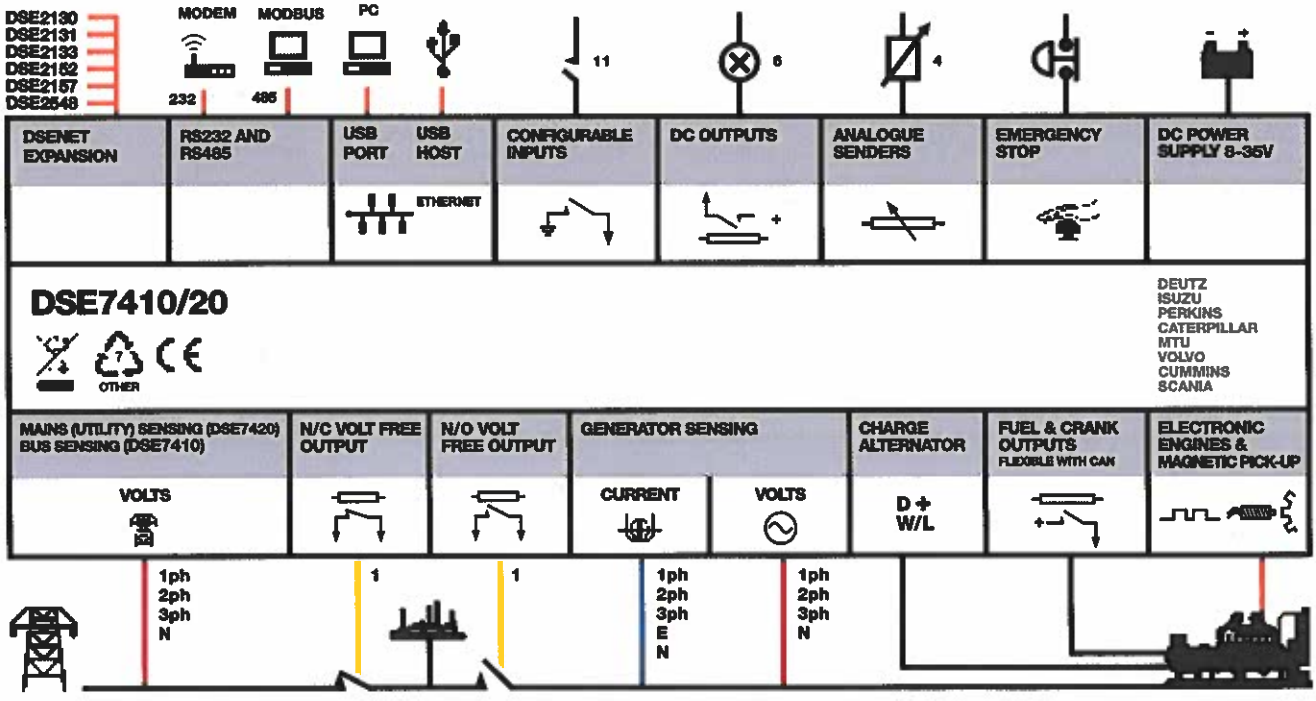

ISSUE 1

REGULAR SESSION CITY COUNCIL MEETING PACKET FOR THE MEETING TO BE HELD ON SEPTEMBER 20, 2021

DSEGenset

DSE

DSE7410/20

AUTO START & AUTO MAINS FAILURE MODULES

FEATURES

DSE7420



DSE7410



KEY FEATURES

- Configurable inputs (11)
- Configurable outputs (8)
- Voltage measurement
- Mains (utility) failure detection
- Dedicated load test button
- kW overload alarms
- Comprehensive electrical protection
- RS232, RS485 & Ethernet remote communications
- Modbus RTU/TCP
- PLC functionality
- Multi event exercise timer
- Back-lit LCD 4-line text display
- Multiple display languages
- Automatic start/Manual start
- Audible alarm
- Fixed and flexible LED indicators
- Event log (250)
- Engine protection
- Fault condition notification to a designated PC
- Front panel mounting
- Protected front panel programming
- Configurable alarms and timers
- Configurable start and stop timers
- Five key menu navigation
- Front panel editing with PIN protection
- 3 configurable maintenance alarms
- CAN and magnetic pick-up/Alt. sensing
- Fuel usage monitor and low fuel alarms
- Charge alternator failure alarm
- Manual speed control (on compatible CAN engines)
- Manual fuel pump control
- "Protections disabled" feature
- Reverse power protection
- Power monitoring (kW h, kV Ar, kV A h, kV Ar h)
- Load switching (load shedding and dummy load outputs)
- Automatic load transfer (DSE7420)
- Unbalanced load protection
- Independent earth fault trip
- Fully configurable via DSE Configuration Suite PC software
- Configurable display languages
- Remote SCADA monitoring via DSE Configuration Suite PC software
- Advanced SMS messaging (additional external modem required)
- Start & stop capability via SMS messaging
- Additional display screens to help with modem diagnostics
- DSENet® expansion
- Integral PLC editor

KEY BENEFITS

- RS232, RS485 & Ethernet can be used at the same time
- DSENet® connection for system expansion
- PLC functionality
- Five step dummy load support
- Five step load shedding support
- High number of inputs and outputs
- Worldwide language support
- Direct USB connection to PC
- Ethernet monitoring
- USB host
- Data logging & trending

SPECIFICATION

DC SUPPLY
CONTINUOUS VOLTAGE RATING
8 V to 35 V Continuous

CRANKING DROPOUTS
Able to survive 0 V for 50 mS, providing supply was at least 10 V before dropout and supply recovers to 5 V. This is achieved without the need for internal batteries

MAXIMUM OPERATING CURRENT
260 mA at 12 V, 130 mA at 24 V

MAXIMUM STANDBY CURRENT
120 mA at 12 V, 65 mA at 24 V

CHARGE FAIL/EXCITATION RANGE
0 V to 35 V

OUTPUTS
OUTPUT A (FUEL)
15 A DC at supply voltage

OUTPUT B (START)
15 A DC at supply voltage

OUTPUTS C & D
8 A AC at 250 V AC (Volt free)

AUXILIARY OUTPUTS E,F,G,H,I & J
2 A DC at supply voltage

GENERATOR
VOLTAGE RANGE
15 V to 333 V AC (L-N)

FREQUENCY RANGE
3.5 Hz to 75 Hz

MAINS (UTILITY) (DSE7420)
VOLTAGE RANGE
15 V to 333 V AC (L-N)

FREQUENCY RANGE
3.5 Hz to 75 Hz

BUS (DSE7410)
VOLTAGE RANGE
15 V to 333 V AC (L-N)

FREQUENCY RANGE
3.5 Hz to 75 Hz

MAGNETIC PICK UP
VOLTAGE RANGE
+/- 0.5 V to 70 V

FREQUENCY RANGE
10,000 Hz (max)

DIMENSIONS
OVERALL
240 mm x 172 mm x 57 mm
9.4" x 6.8" x 2.2"

PANEL CUTOUT
220 mm x 160 mm
8.7" x 6.3"

MAXIMUM PANEL THICKNESS
8 mm
0.3"

STORAGE TEMPERATURE RANGE
-40 °C to +85 °C

RELATED MATERIALS

TITLE	PART NO'S
DSE7410 Installation Instructions	053-085
DSE7420 Installation Instructions	053-088
DSE74xx Quick Start Guide	057-162
DSE74xx Operator Manual	057-161
DSE74xx PC Configuration Suite Manual	057-160

DEEP SEA ELECTRONICS PLC UK
Highfield House, Hunmanby Industrial Estate, Hunmanby YO14 0PH
TELEPHONE +44 (0) 1723 890099 **FACSIMILE** +44 (0) 1723 893303
EMAIL sales@deepseaplc.com **WEBSITE** www.deepseaplc.com

DEEP SEA ELECTRONICS INC USA
3230 Williams Avenue, Rockford, IL 61101-2668 USA
TELEPHONE +1 (815) 316 8706 **FACSIMILE** +1 (815) 316 8708
EMAIL sales@deepseausa.com **WEBSITE** www.deepseausa.com

Deep Sea Electronics Plc maintains a policy of continuous development and reserves the right to change the details shown on this data sheet without prior notice. The contents are intended for guidance only.

Registered in England & Wales No.01319649
VAT No.316923457

REGULAR SESSION CITY COUNCIL MEETING PACKET FOR THE MEETING TO BE HELD ON SEPTEMBER 20, 2021



Guest chargers are proven performers in genset applications. For specific application information, or if you are developing a new product, be sure to consult with the Guest applications engineering team to ensure the correct charger is specified.

Genset Chargers

MODEL	TOTAL AMPS	OUT-PUTS	AMPS PER OUTPUT	BATTERY SYSTEM	INPUT VOLTAGE	AC	DC	DIMENSIONS	WT. (LBS)	AGENCY LISTING
2602A-12 2602A-12-B (bulk)	2	1	2	12V	100 - 130 50/60Hz	6' w/ Connect-Charge plug	4' w/ ring terminals	2.9" x 5.1" x 1.5"	2	UL
2605A-1-24RT-01 (bulk pack only) (1)	5	1	5	24V	100 - 130 50/60Hz	6' SJT 18-3 w/ Connect-Charge plug	6' SJT 18-3 w/ ring terminals	7.4" x 6.3" x 2.4"	4.5	UL
2608A-B-01 (bulk pack only) (1)	6	1	6	12V	100 - 130 50/60Hz	6' cable w/ molded plug rated -40 to 105C	4' w/ ring terminals rated -40 to 105C	3.5" x 6.4" x 2.3"	4	UL
2610A 2610A-B (bulk)	10	2	5/5	12V+12V	100 - 130 50/60Hz	Studs	Studs	5.5" x 7.8" x 2.4"	5.6	– UL (bulk only)

(1) 2-stage charging

c UL Individual agency listings as shown in product chart.

REGULAR SESSION CITY COUNCIL MEETING PACKET FOR THE MEETING TO BE HELD ON SEPTEMBER 20, 2021

Plastic Magna Seal Air Cleaners



Internal or External Evacuator Valve
High Strength Polymer
Working Temp –40c to +80c (-40F to 176F)
Design Compatibility with other Manufacturers
Industry Standard elements
Can be Mounted Vertical or Horizontal

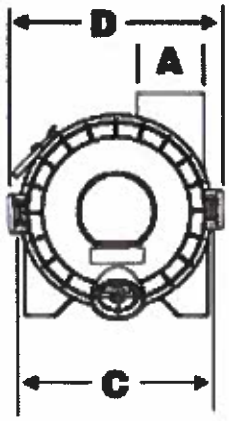

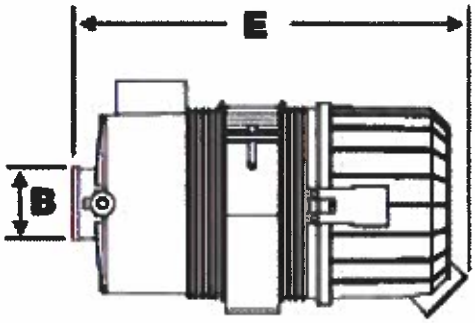

Type 1
Straight Outlet

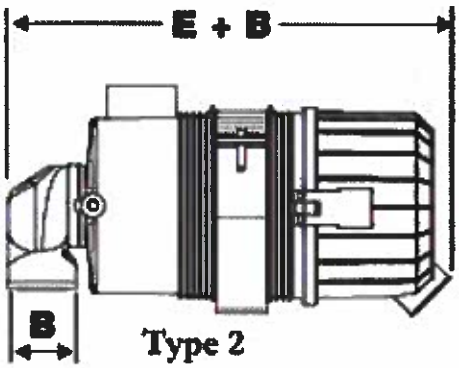

Type 2
90º Outlet

Air Cleaner Assembly																			
			Initial Restriction						A		B		C		D		E	
Model Number	Part Number	Type	6" H2O CFM	6" H2O M3m	8" H2O CFM	8" H2O M3m	10" H2O CFM	10" H2O M3m	OD Inlet inch	OD Inlet mm	OD Outlet inch	OD Outlet mm	inch	mm	inch	mm	inch	mm
2s-FW-E1	68110	1	75	2.1	90	2.5	105	3.0	2.00	51	1.75	45	4.8	122	6.14	156	8.98	228
2s-FW-E2	68111	1	65	1.8	75	2.1	85	2.4	2.00	51	1.75	45	4.80	122	6.14	156	8.98	228
2s-FW-E1-90	68103	2	63	1.7	73	2.0	82	2.3	2.00	51	1.75	45	4.80	122	6.14	156	10.43	265
2s-FW-E2-90	68107	2	53	1.5	63	1.8	71	2.0	2.00	51	1.75	45	4.80	122	6.14	156	10.43	265
2-FW-E1	68120	1	100	2.8	115	3.3	130	3.7	2.00	51	2.00	51	5.75	146	7.09	180	13.39	340
2-FW-E2	68130	1	90	2.5	105	3.0	115	3.3	2.00	51	2.00	51	5.75	146	7.09	180	13.39	340
2-FW-E1-90	68116	2	88	2.4	102	2.9	113	3.2	2.00	51	2.00	51	5.75	146	7.09	180	14.96	380
2-FW-E2-90	68127	2	77	2.2	92	2.6	103	2.9	2.00	51	2.00	51	5.75	146	7.09	180	14.96	380
2.5-FW-E1	68132	1	150	4.2	175	5.0	195	5.5	2.50	63.5	2.50	63.5	6.89	175	8.15	207	14.13	359
2.5-FW-E2	68133	1	145	4.1	165	4.7	185	5.2	2.50	63.5	2.50	63.5	6.89	175	8.15	207	14.13	359
2.5-FW-E1-90	68131	2	134	3.8	156	4.4	175	5.0	2.50	63.5	2.50	63.5	6.89	175	8.15	207	16.22	412
2.5-FW-E2-90	68134	2	127	3.6	148	4.2	168	4.7	2.50	63.5	2.50	63.5	6.89	175	8.15	207	16.22	412
3-FW-E1	68140	1	160	4.5	190	5.4	210	5.9	3.00	76	3.00	76	7.24	184	8.58	218	14.57	370
3-FW-E2	68150	1	150	4.2	170	4.8	190	5.4	3.00	76	3.00	76	7.24	184	8.58	218	14.57	370
3-FW-E1-90	68140-2	2	154	4.4	181	5.1	196	5.6	3.00	76	3.00	76	7.24	184	8.58	218	17.80	452
3-FW-E2-90	68150-2	2	138	4.0	162	4.6	182	5.2	3.00	76	3.00	76	7.24	184	8.58	218	17.80	452
3.75-FW-E1	68160	1	250	7.1	290	5.4	325	9.2	3.75	95	3.50	89	8.35	212	9.72	247	15.63	397
3.75-FW-E2	68170	1	225	6.4	260	7.4	280	7.9	3.75	95	3.50	89	8.35	212	9.72	247	15.63	397
3.75-FW-E1-90	68157	2	212	6.0	250	7.1	277	7.8	3.75	95	3.50	89	8.35	212	9.72	247	18.5	470
3.75-FW-E2-90	68167	2	188	5.3	220	6.2	250	7.1	3.75	95	3.50	89	8.35	212	9.72	247	18.5	470
4.5-FW-E1	68175	1	375	10.6	425	12.0	475	13.5	4.50	114	4.00	102	10.60	268	11.9	302	19.13	486
4.5-FW-E2	68175-1	1	325	9.2	375	10.6	425	12.0	4.50	114	4.00	102	10.60	268	11.9	302	19.13	486
6-FW-E1	68178	1	600	17.0	685	19.4	770	21.8	6.00	152	5.00	127	12.20	309	13.54	344	22.00	560
6-FW-E2	68179	1	500	14.2	565	16.0	630	17.8	6.00	152	5.00	127	12.20	309	13.54	344	22.00	560
7-FW-E1	68182	1	800	22.7	910	25.8	1060	30.0	7.00	178	6.00	152	15.50	394	16.80	427	21.50	545
7-FW-E2	68185	1	710	20.1	830	23.5	960	27.2	7.00	178	6.00	152	15.50	394	16.80	427	21.50	545

REGULAR SESSION CITY COUNCIL MEETING PACKET FOR THE MEETING TO BE HELD ON SEPTEMBER 20, 2021

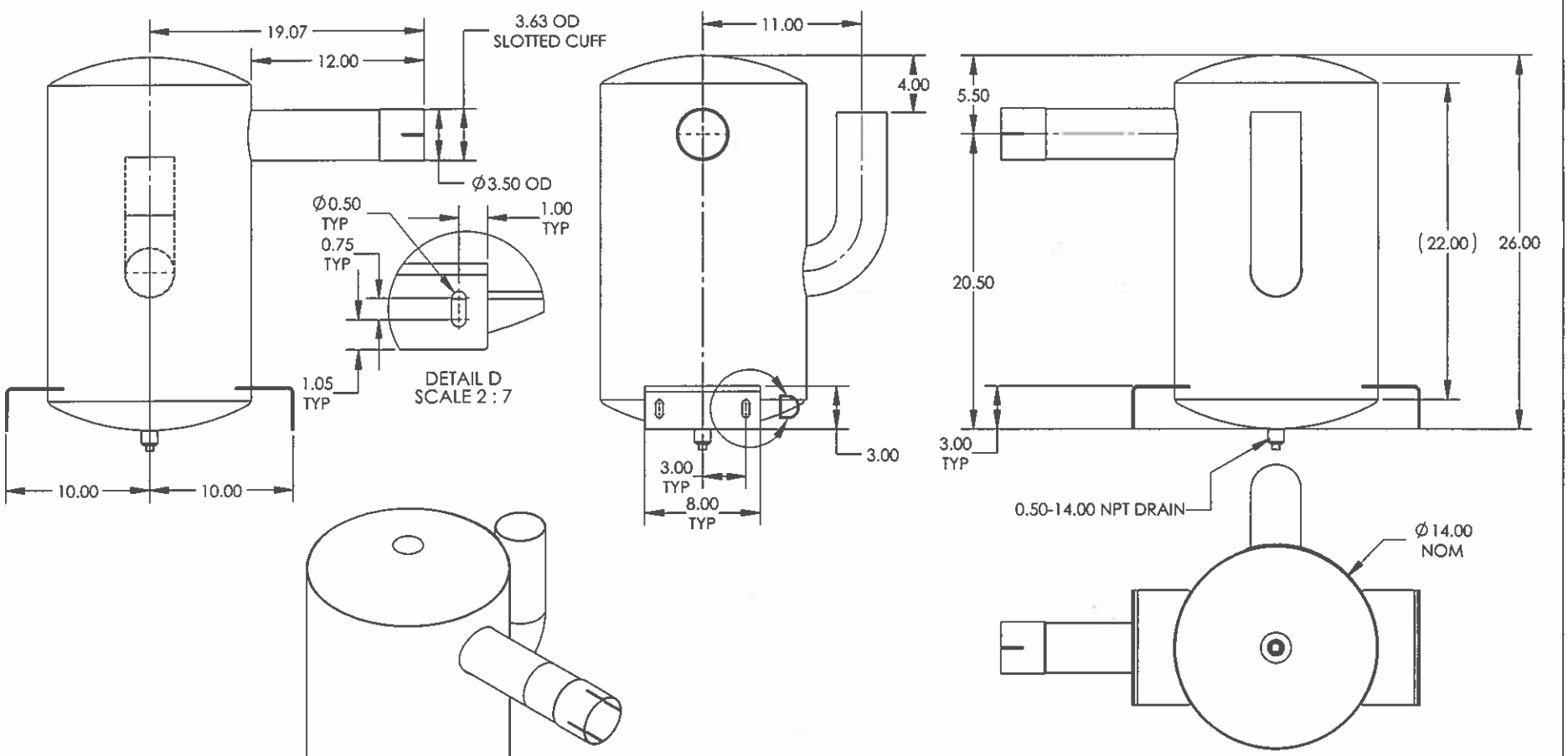

ENGINE INFORMATION	SILENCER INFORMATION	DRAWN BY	DATE	BERGARI SOLUTIONS
ENGINE MAKE: PSI	RESONATOR FREQUENCY: —	CHECKED BY: CB	DATE: 09/15/2017	
ENGINE MODEL: 5.7L	RESONATOR ALPHA: ---	ENGINEERING: CB	DATE:	DESCRIPTION: SIL: COMP CRIT CS S-E 3.50-3.50 Ø14.00 26.00 OAL F:5.50 ---
DISPLACEMENT: 537	SILENCER IGH: —	MANUFACTURING: CB	DATE:	CONSTRUCTION MATERIAL: CS
EXHAUST FLOW: 1063	SILENCER IL: ---	TOLERANCES UNLESS OTHERWISE SPECIFIED: X ±0.39 ALL ANGLES ±1° XX ±0.125 XXX ±0.010	WEIGHT (LBS): 59	FINISH: HIGH TEMP BLACK PAINT
EXHAUST TEMPERATURE: 1300	TOLERANCES DO NOT APPLY TO GAGE THICKNESS OR COMMERCIAL FEATURES	SHEET: 3 OF 3		
MAX BACK PRESSURE: 40	THIRD ANGLE PROJECTION	This drawing and the information contained is confidential and the property of Bergari Solutions, LLC. None of this information is to be copied or shared in any form without the express permission from Bergari Solutions, LLC.	PART NUMBER: 500-008346	REV: 02
RAW SOUND PRESSURE: ---			SCALE (DO NOT SCALE): 1:7	SHEET SIZE: B

CUSTOMER	CUSTOMER P/N	REV.	BY	DATE	DESCRIPTION	ECO
---	---	02	CB	09/15/2017	OVERALL HEIGHT CHANGE	—

REGULAR SESSION CITY COUNCIL MEETING PACKET FOR THE MEETING TO BE HELD ON SEPTEMBER 20, 2021

SP-1200 OPEN DIMENSIONAL OVERVIEW

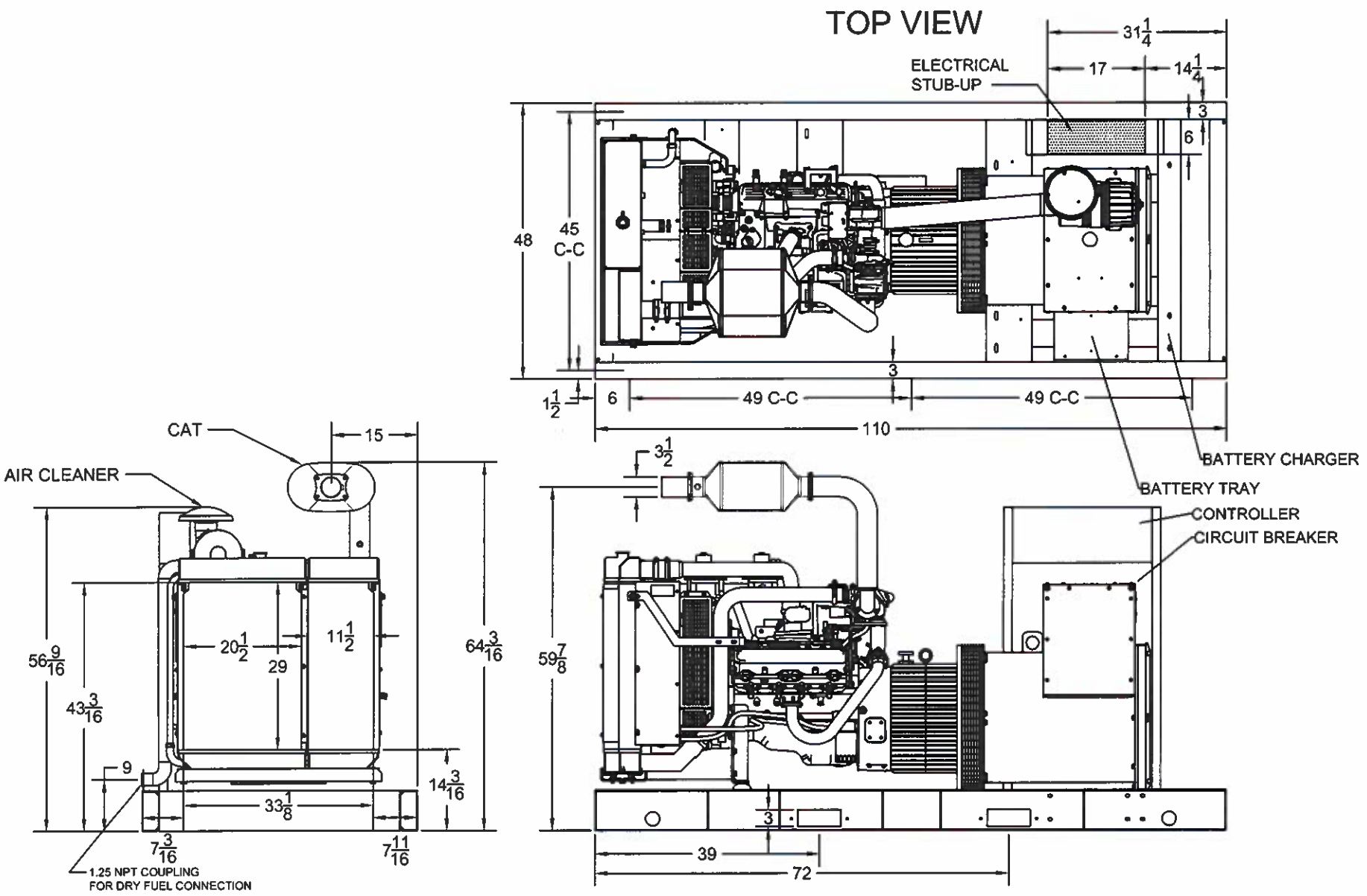

REGULAR SESSION CITY COUNCIL MEETING PACKET FOR THE MEETING TO BE HELD ON SEPTEMBER 20, 2021

OUTLINE DIMENSIONS FOR SP-1200 & SP-1500 LEVEL 2 ENCLOSURE
(HINGED DOORS)

TOP VIEW

(GEN-SET HAS (4) DOORS, (2) SHOWN OPEN ARE TYPICAL FOR BOTH SIDES)

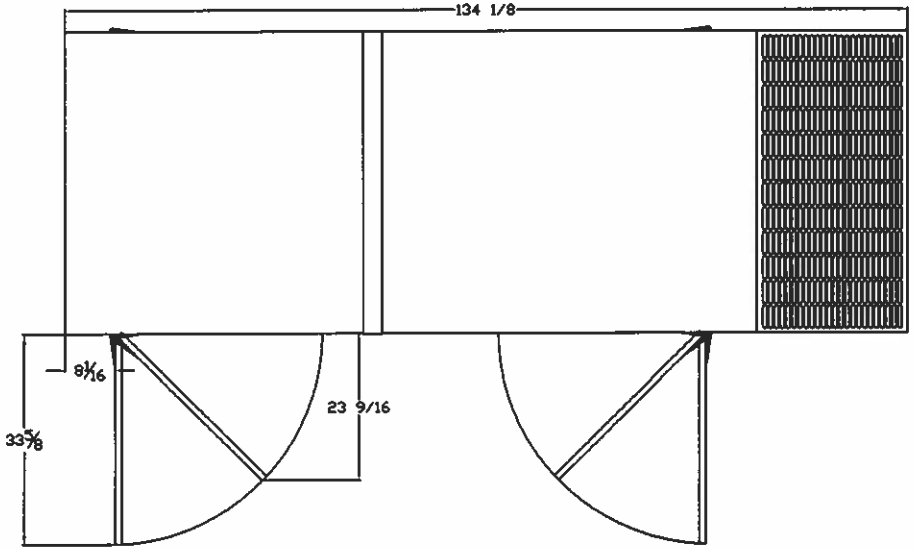

FRAME VIEW

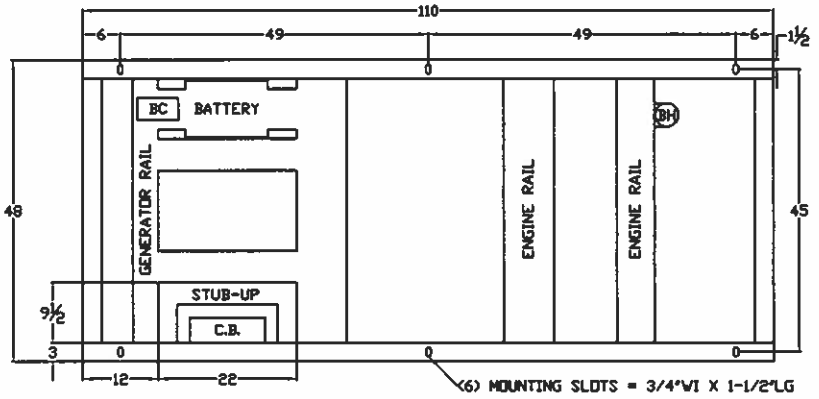

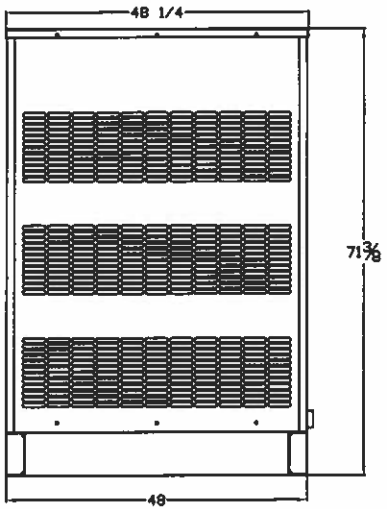

GENERATOR END VIEW

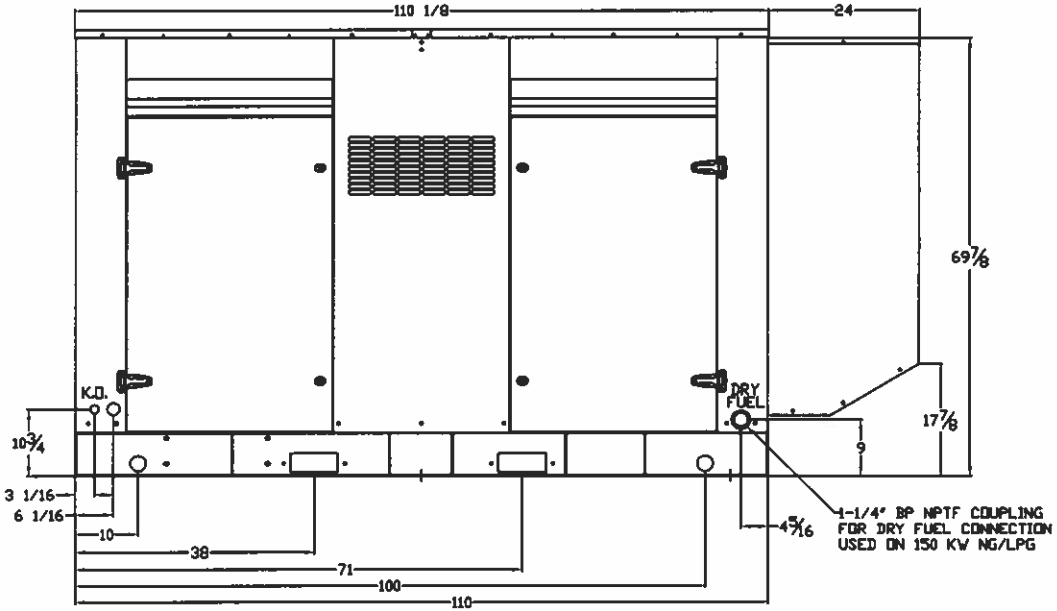

SIDE VIEW

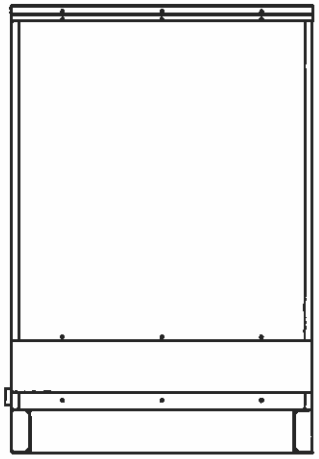

RADIATOR END VIEW

342

SP-1200-1500-L2-GEN-SET-110"LG-HINGES-OVERVIEW-20180202

REGULAR SESSION CITY COUNCIL MEETING PACKET FOR THE MEETING TO BE HELD ON SEPTEMBER 20, 2021

OUTLINE FOR ASCO® 300 SERIES 150-600 AMPERE "J" FRAME (3ATS,3NTS,3ADTS,3NDTS) FRONT CONNECTED TRANSFER SWITCHES TYPE 3R/12 ENCLOSURE

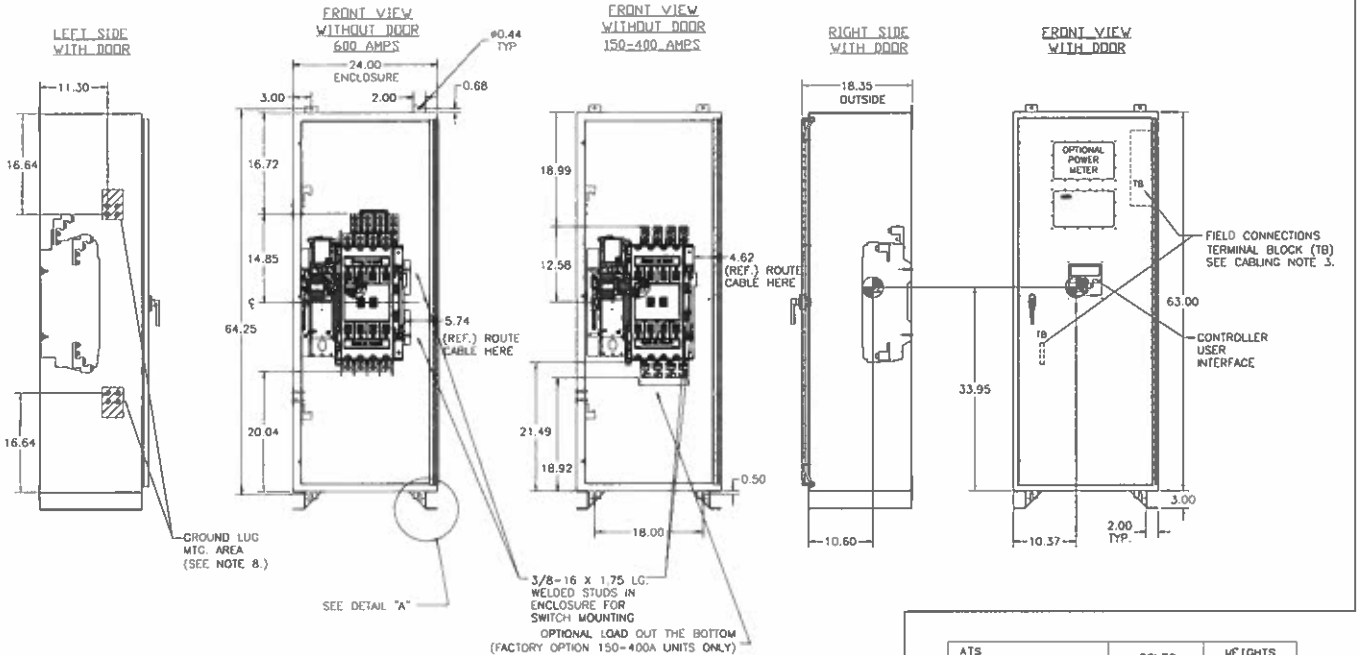

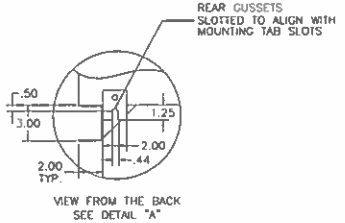

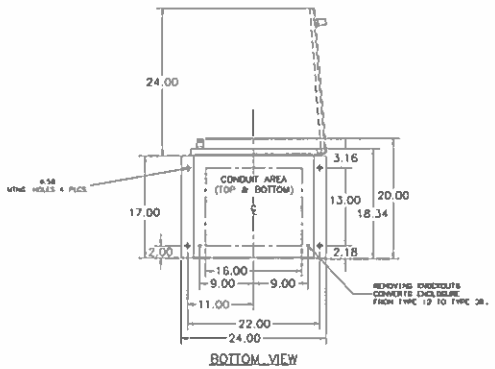

ATS SWITCH RATING (AMPS)	POLES	WEIGHTS LB (KG)
260-400	2	206 (93)
260-400	C2	N/A
260-400	3	212 (96)
260-400	C3	N/A
260-400	4	218 (99)
600	2	211 (96)
600	C2	N/A
600	3	215 (98)
600	C3	N/A
600	4	225 (102)

CTS/DTS SWITCH RATING (AMPS)	POLES	WEIGHTS LB (KG)
150-400	2	222 (101)
150-400	C2	N/A
150-400	3	228 (104)
150-400	C3	N/A
150-400	4	224 (102)
600	2	247 (112)
600	C2	N/A
600	3	234 (106)
600	C3	N/A
600	4	241 (109)

GENERAL NOTES

1. TYPE 3R/12 ENCLOSURE. FREE STANDING, FLOOR OR WALL MOUNTABLE. 14 GAUGE CONSTRUCTION.
2. THREE POINT LATCHING DOOR WITH LOCKABLE HANDLE.
3. FINISH: ANSI 61 GRAY, POLYESTER POWDER STANDARD. OTHER ANSI COLORS AVAILABLE CONSULT FACTORY UL RECOGNIZED.
4. RECOMMENDED CLEARANCES: FRONT: 24 INCHES
5. A 20A RATED GROUND BUS IS PROVIDED.
6. UNIT IS DESIGNED FOR COMBINATION TOP AND BOTTOM CABLE ENTRY. THE STANDARD SWITCH CONFIGURATION IS FOR TOP LUGS EMERGENCY AND LOAD AND BOTTOM LUGS NORMAL. OPTIONALLY, THE SWITCH MAY BE SUPPLIED WITH REVERSE NORMAL & EMERGENCY LUGS. (REFER TO THE WIRING DIAGRAM FURNISHED WITH EACH TRANSFER SWITCH TO DETERMINE TERMINATION POSITIONS).
7. A FULL RATED NEUTRAL CONNECTION FOR EACH SOURCE AND THE LOAD IS OPTIONAL. WHEN PROVIDED IT IS IN ONE OF THE FOLLOWING FORMATS AS SPECIFIED BY THE CATALOG NO. NEUTRAL TYPE;
   A. SOLID (COPPER BUS) NEUTRAL
   B. SWITCHED NEUTRAL POLE
   C. OVERLAPPING NEUTRAL POLE (NOT AVAILABLE ON 7ACTS/ADTS UNITS)
8. CENTER OF GRAVITY.

CABLING NOTES

1. ALL SIZES SUPPLIED STANDARD WITH MECHANICAL (SCREW TYPE) LUGS. (SEE AMP SIZE BELOW)
   A. LUG MATERIAL: ALUMINUM ALLOY 6061-T6 WITH ELECTRO TIN PLATED FINISH.
   B. SCREW MATERIAL: ALUMINUM ALLOY 6262-T9 WITH ELECTRO TIN PLATED FINISH.
   C. UL LISTED, CSA CERTIFIED.
   D. LUG SCREW TIGHTENING TORQUE PER UL 486B: 19 FT-LBS.
   E. SUITABLE WIRE BENDING SPACE IS PROVIDED. (SEE AMP SIZE BELOW)
2. GROUND LUGS ARE PROVIDED STANDARD AS FOLLOWS. (SEE AMP SIZE BELOW).
3. CUSTOMER TERMINAL BLOCKS:
   FOR ALL 300 SERIES 3ADTS, 3NDTS UNITS THE TB WILL BE MOUNTED ON THE UPPER RIGHT INSIDE OF ENCLOSURE. FOR 3ATS AND 3NTS UNITS TB WILL BE MOUNTED ON THE TRANSFER SWITCH FRAME AS INDICATED.

NOTES 150-400 AMP SWITCHES

1. SUPPLIED WITH STANDARD MECHANICAL (SCREW TYPE) LUGS ON THE NORMAL, EMERGENCY & LOAD BUS STABS. ONE (1) LUG PER PHASE AND NEUTRAL EACH SUITABLE FOR CONNECTION OF TWO (2) 1/0 -250MCM CU/AL CABLES OR ONE (1) #4 -600MCM CU/AL CABLE.
   A. SUITABLE WIRE BENDING SPACE IS PROVIDED FOR UP TO ONE (1) 600MCM CABLE PER TERMINAL PER NEC.
2. GROUND LUGS ARE PROVIDED STANDARD AS FOLLOWS; SIX (6) 1/0 -250MCM CU/AL CABLES OR THREE (3) #4 -600MCM CU/AL CABLE CONNECTIONS.

NOTES 600 AMP SWITCHES

1. SUPPLIED WITH STANDARD MECHANICAL (SCREW TYPE) LUGS ON THE NORMAL, EMERGENCY & LOAD BUS STABS. ONE (1) LUG PER PHASE AND NEUTRAL EACH SUITABLE FOR CONNECTION OF TWO (2) #2 -600MCM CU/AL CABLES.
   A. SUITABLE WIRE BENDING SPACE IS PROVIDED FOR UP TO TWO (2) 600MCM CABLE PER TERMINAL PER NEC.
2. GROUND LUGS ARE PROVIDED STANDARD AS FOLLOWS; SIX (6) #2 -600MCM CU/AL CABLE CONNECTIONS.

REV	BY	DATE	DESCRIPTION
A	249736	TB	7/23/14
—	245551	BK	11/25/13

PROJECT NAME: COMPOSITE — OUTLINE
300 SERIES TS "J"
150-600 AMP TYPE 3R/12
THIRD ANGLE PROJECTION

	BY	DATE
DRAWN	DJB	11/25/13
CHECKED	BK	11/25/13
ENGINEER APPROVAL	BK	11/25/13
QUALITY APPROVAL	—	—

ASCO® ASCO Power Technologies, L.P. FLORHAM PARK, NEW JERSEY 07932 U.S.A.

COMPUTER GENERATED DRAWING
SCALE NONE SIZE DS
DWG. NO. 1001393-002
REV A ECN 249736 SHT 1 OF 1

REGULAR SESSION CITY COUNCIL MEETING PACKET FOR THE MEETING TO BE HELD ON SEPTEMBER 20, 2021

Total Energy Solutions
15811 Tuckerton Road
Houston, Texas 77095
Phone: 281-861-1284
Fax: 281-861-1288

Attention: Doug Hall

Reference: Install Generator & ATS at the Jersey Village Water Plant, Jersey Village Texas

We are pleased to submit the following Proposal for Labor & Materials, to install a new 200 KW generator and 600 Amp Service Entrance Rated Automatic Transfer Switch (ATS), at the above referenced address, as discussed and instructed during the Pre-Bid Meeting.

SCOPE OF WORK

- Perform site discovery work, for new power connections, to the existing switch gear.
- Install new service (riser) pole, adjacent to the existing pole.
- Excavate and install underground conduits from the new ATS location, to the new generator pad site (based on conduit lengths of 30' maximum from the building).
- Perform conduit stub ups at the new generator concrete pad site. Concrete pad by others.
- Install concrete mounting pad and/or rack, for the new ATS on the outside of the building.
- Receive and set the ATS (FBO).
- Install new service entrance conduits from the new ATS, up the new service pole.
- Install new service entrance conductors, rated at 500 Amps minimum and terminate in the new 600 Amp Service Entrance ATS.
- Make wall penetrations for new conduit entries into the existing switch gear, from the ATS.
- Receive and set the new 200 KW generator.
- Install new conductors, including controls, from the ATS, to the generator.
- Connect all conductors, (Power, controls & 120 Volt circuits) at the new generator and in the ATS.
- Install new load side conductors from the ATS to the existing switchgear.
- Move the existing or install new service metering equipment, adjacent to the new service pole.

REGULAR SESSION CITY COUNCIL MEETING PACKET FOR THE MEETING TO BE HELD ON SEPTEMBER 20, 2021

- Coordinate with customer and CenterPoint Energy for a shutdown, to make connections to the new service equipment.
- Make final connections in the existing switch gear and verify phase rotation and voltage.
- Provide labor assistance, in the generator start up and verify correct phase rotation.
- Demo old service entrance equipment and pole.
- includes furnishing the new ATS and Generator.
- includes Crane and Rigging fees, associated with the installation of the new generator.
- includes concrete equipment pad for the new generator.
- include freights or transportation of equipment to or from the site..
- Sales Tax & Bond Costs.

REGULAR SESSION CITY COUNCIL MEETING PACKET FOR THE MEETING TO BE HELD ON SEPTEMBER 20, 2021

QUOTATION

Total Energy Solutions
20500 Clay Center Dr
Katy, TX 77449
281-861-1284

Quote Number	8458.1
Quote Date	08/23/2021
Terms	PRE-PAY
Customer ID	
Quote Expires	09/22/2021

Bill To:

City Of Jersey Village
16401 Lakeview Dr
Jersey Village , TX 77040

Attn: Accounts Payable

Ship To:

City Of Jersey Village
16401 Lakeview Dr
Jersey Village , TX 77040
Requested By: Mark Bitz
Job/RFQ #:

Ship Via	Sales Rep	Taker
	Doug Hall	Doug Hall

Shipping Notes

Order Notes

Item ID / Item Description	Quantity	UOM	Unit Price	Extended Price
QUOTE ITEM - HOU SPJD-2100-3-4 -2 277/480 V, 3 PH, 60 HZ Diesel with enclosure Customer Part #: Alternate Part #: Line Item Note:	1.00	EA	39,534.88	39,534.88
QUOTE ITEM - HOU ATSS3R-600-3-4 600 AMP 277/480V 3PH SERVICE ENTRANCE RATED ASCO Customer Part #: Alternate Part #: Line Item Note:	1.00	EA	9,411.76	9,411.77
QUOTE ITEM - HOU Electrical Installation Customer Part #: Alternate Part #: Line Item Note:	1.00	EA	50,961.11	50,961.11

This document is strictly confidential, and not to be distributed to anyone other than the intended receiving party. Prices are subject to change without notice. Prices quoted do not include any federal, state or local sales, use, property, TERP or excise taxes. Taxable status and tax rates will be determined at time of order. All terms and conditions apply.

REGULAR SESSION CITY COUNCIL MEETING PACKET FOR THE MEETING TO BE HELD ON SEPTEMBER 20, 2021

Item ID Item Description	Quantity	UOM	Unit Price	Extended Price
QUOTE ITEM - HOU Crane, and Rigging	1.00	EA	4,000.00	4,000.00
Customer Part #: **Alternate Part #:** **Line Item Note:**				
QUOTE ITEM - HOU generator rental	1.00	EA	1,650.00	1,650.00
Customer Part #: **Alternate Part #:** **Line Item Note:**				

Total Lines: *5*

Sub-Total:	**105,557.76**
Tax:	**TBD**
Addons:	**0.00**
Total (Before Sales Tax):	**105,557.76**

This document is strictly confidential, and not to be distributed to anyone other than the intended receiving party. Prices are subject to change without notice. Prices quoted do not include any federal, state or local sales, use, property, TERP or excise taxes. Taxable status and tax rates will be determined at time of order. All terms and conditions apply.

REGULAR SESSION CITY COUNCIL MEETING PACKET FOR THE MEETING TO BE HELD ON SEPTEMBER 20, 2021

GILLETTE GENERATORS

LIQUID COOLED DIESEL ENGINE GENERATOR SET

Model	HZ	STANDBY 120°C RISE
SPJD-2100-60 HERTZ	60	210

60 HZ MODEL

SPJD-2100

All generator sets are USA prototype built and thoroughly tested. Production models are USA factory built and 100% load tested.

UL2200, UL1446, UL508, UL142, UL498

NFPA 110, 99, 70, 37
All generator sets meet NFPA-110 Level 1, when equipped with the necessary accessories and installed per NFPA standards.

NEC 700, 701, 702, 708

NEMA ICS10, MG1, ICS6, AB1

ANSI C62.41, 27, 59, 32, 480, 40Q, 81U, 360-05

ASCE 7-05 & 7-10
All generator sets meet 180 MPH rating.

EPA 40CFR Part 60, 1048, 1054, 1065, 1068

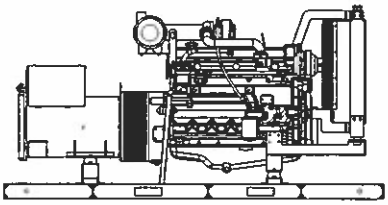

"OPEN" GEN-SET
There is no enclosure, so gen-set must be placed within a weather protected area, un-inhabited by humans or animals, with proper ventilation. Silencer not supplied, as installation requirements are not known. However, this item is available as optional equipment.

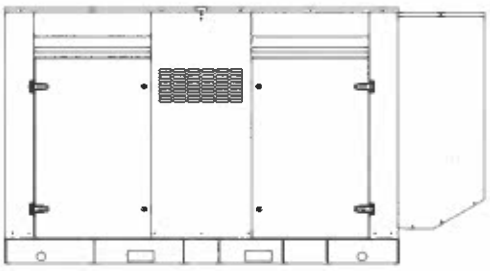

"LEVEL 2" HOUSED GEN-SET
Full aluminum weather protection and superior sound attenuation for specific low noise applications. Critical grade muffler is standard.

GENERATOR RATINGS

GENERATOR MODEL	VOLTAGE		PH	HZ	120°C RISE STANDBY RATING		POWER LEAD CONNECTIONS
	L-N	L-L			KW/KVA	AMP	
SPJD-2100-1-1	120	240	1	60	210/210	875	4 LEAD DEDICATED 1 PH
SPJD-2100-3-2	120	208	3	60	210/262.5	729	12 LEAD LOW WYE
SPJD-2100-3-3	120	240	3	60	210/262.5	632	12 LEAD HIGH DELTA
SPJD-2100-3-4	277	480	3	60	210/262.5	316	12 LEAD HIGH WYE
SPJD-2100-3-5	127	220	3	60	210/262.5	690	12 LEAD LOW WYE
SPJD2100-3-16	346	600	3	60	210/262.5	252	4 LEAD DEDICATED 3 PH

RATINGS: All single phase gen-sets are dedicated 4 lead windings, rated at unity (1.0) power factor. All three phase gen-sets are 12 lead windings, rated at .8 power factor. 120° C "STANDBY RATINGS" are strictly for gen-sets that are used for back-up emergency power to a failed normal utility power source. This standby rating allows varying loads, with no overload capability, for the entire duration of utility power outage. All gen-set power ratings are based on temperature rise measured by resistance method as defined by MIL-STD 705C and IEEE STD 115, METHOD 6.4.4. All generators have class H (180°C) insulation system on both rotor and stator windings. All factory tests and KW/KVA charts shown above are based 120°C (standby) R/R winding temperature, within a maximum 40°C ambient condition. Generators operated at standby power ratings must not exceed the temperature rise limitation for class H insulation system, as specified in NEMA MG1-22.40. Specifications & ratings are subject to change without prior notice.

REGULAR SESSION CITY COUNCIL MEETING PACKET FOR THE MEETING TO BE HELD ON SEPTEMBER 20, 2021

APPLICATION AND ENGINEERING DATA FOR MODEL SPJD-2100-60 HZ

GENERATOR SPECIFICATIONS

Manufacturer.....Stamford Electric Generators
Model & Type..... UCID274J-311, 4 Pole, 12 Lead, Three Phase
..... UCI274H-17, 4 Pole, 6 Lead, 600V, Three Phase
Exciter.....Brushless, shunt excited
Voltage Regulator.....Solid State, HZ/Volts
Voltage Regulation.....½%, No load to full load
Frequency.....60 HZ
Frequency Regulation .....± ½% (1/2 cycle, no load to full load)
Unbalanced Load Capability..... 100% of standby amps
Total Stator and Load Insulation.....Class H, 180°C
Temperature Rise..... 120°C R/R, standby rating @ 40°C amb.
3 Ø Motor Starting @ 30% Voltage Dip (208-240V).....620 kVA
3 Ø Motor Starting @ 30% Voltage Dip (480V).....840 kVA
3 Ø Motor Starting @ 30% Voltage Dip (600V).....850 kVA
Bearing..... 1, Pre-lubed and sealed
Coupling.....Direct flexible disc
Total Harmonic Distortion..... Max 3½% (MIL-STD705B)
Telephone Interference Factor..... Max 50 (NEMA MG1-22)
Deviation Factor..... Max 5% (MIL-STD 405B)
Ltd. Warranty Period..... 24 Months from start-up date or
..... 1000 hours use, first to occur.

GENERATOR FEATURES

- World Renown Stamford Electric Generator having UL-1446 certification.
- Full generator protection with **Deep Sea 7420** controller, having UL-508 certification.
- Automatic voltage regulator with over-excitation, under-frequency compensation, under-speed protection, and EMI filtering. Entire solid-state board is encapsulated for moisture protection.
- Generator power ratings are based on temperature rise, measured by resistance method, as defined in MIL-STD 705C and IEEE STD 115, Method 6.4.4.
- Power ratings will not exceed temperature rise limitation for class H insulation as per NEMA MG1-22.40.
- Insulation resistance to ground, exceeds 1.5 meg-ohm.
- Stator receives 2000 V. hi-potential test on main windings, and rotor windings receive a 1500 V. hi-potential test, as per MIL-STD 705B.
- Full amortisseur windings with UL-1446 certification.
- Complete engine-generator torsional acceptance, confirmed during initial prototype testing.
- Full load testing on all engine-generator sets, before shipping.
- Self ventilating and drip-proof & revolving field design

ENGINE SPECIFICATIONS AND APPLICATIONS DATA

ENGINE

Manufacturer..... John Deere
Model and Type..... 6068HF485, 4 cycle, liquid Cooled
Aspiration.....Turbocharged
Charged Air Cooled System ..... Air to Air
Cylinder Arrangement.....6 Cylinders, In-Line
Displacement Cu. In. (Liters).....415 (6.8)
Bore & Stroke in (Cm.).....4.19 x 5 (10.6 x 12.7)
Compression Ratio..... 17.0:1
Main Bearings & Style..... 7, Replaceable Inserts
Cylinder Head.....Cast Iron
Pistons.....6, Aluminum Alloy
Crankshaft..... Forged Chrome Steel
Exhaust Valve..... Stainless Steel
Governor.....JDEC Electronic L16 DENSO HP3
Frequency Regulation .....± 1/4%
Air Cleaner.....Dry, Replaceable Cartridge
Engine Speed .....1800 rpm
Max Power, bhp (kwm) Standby 315 (235)
BMEP: psi (kpa) Standby 334 (2304)
Ltd. Warranty Period..... 24 months or 2000 hrs, first to occur

FUEL SYSTEM

Type ..... Diesel Fuel Oil (ASTM No. 2-D)
Combustion System ..... Direct Injection
Fuel Injection Pump.....Stanadyne Rotary Type
12 VDC air intake heaters.....Standard Equipment
Fuel Filter and Water Separator.....Yes

FUEL CONSUMPTION

GAL/HR (LITER/HR)	STANDBY
100% LOAD	15.5 (58.7)
75% LOAD	11.3 (42.8)
50% LOAD	7.9 (29.9)

OIL SYSTEM

Type ..... Full Pressure
Oil Pan Capacity qt. (L) 34.4 (32.5)
Oil Pan Cap. W/ filter qt. (L) 35.3 (33.4)
Oil Filter..... 1, Replaceable Spin-On

ELECTRICAL SYSTEM

Ignition System .....Electronic
Eng. Alternator/Starter: 12 VDC, negative ground, 65 amp/hr.

Recommended Battery to -18°C (0°F):... 12 VDC, Size BCI# 27, Max Dimensions: .....12" lg X 6 3/4" wi X 9" hi, with standard round posts. Min output at 700 CCA. Battery tray (max. dim. at 12"lg x 7"wi), hold down straps, battery cables, and battery charger, is furnished. Installation of (1) starting battery is required, with possible higher AMP/HR rating, as described above, if normal environment averages -13°F (-25°C) or cooler.

CERTIFICATIONS

All engines are CARB and EPA emissions certified. All emergency stationary diesel engines are Tier III compliant.

REGULAR SESSION CITY COUNCIL MEETING PACKET FOR THE MEETING TO BE HELD ON SEPTEMBER 20, 2021

APPLICATION AND ENGINEERING DATA FOR MODEL SPJD-2100-60 HZ

COOLING SYSTEM

Type of System ..... Air to Air, Charged Air Cooler
Coolant Pump ..... Pre-lubricated, self-sealing
Cooling Fan Type (no. of blades) ..... Pusher (7)
Fan Diameter inches (cm) ..... 22" (55.9)
Ambient Capacity of Radiator °F (°C) 125 (51.6)
Engine Jacket Coolant Capacity Qt. (L) 13 (12.3)
Radiator Coolant Capacity Qt. (L) 24 (22.7)
Water Pump Capacity gpm (L/min) 70 (265)
Heat Reject Coolant: Btu/min (kw) 5404 (94.9)
Air to Air Heat Reject, BTU/min (kw) 3264 (57.34)
Low Radiator Coolant Level Shutdown ..... Standard

Note: Coolant temp. shut-down switch setting at 212°F (100°C) with 50/50 (water/antifreeze) mix.

COOLING AIR REQUIREMENTS

Combustion Air cfm (m^3/min) 619 (17.5)
Max Air Intake Restrictions:
Clean Air Cleaner, H_2O (KPA) 15 (3.75)
Intake Manifold Pressure, Psi (kpa) 37 (252)
Max. Allowable Temp. Rise, Amb.
Air to Eng. Inlet, °F (°C) 15 (8)
Max. Temp. out of Charger Air Cooler
@ 77° F (25°C), Amb. Air °F (°C) 140 (60)
Radiator Cooling Air, SCFM (m^3/min) 8000 (226.5)

EXHAUST SYSTEM

Exhaust Outlet Size ..... 3.5"
Max. Back Pressure in H_2O (kpa) 40 (10)
Exhaust Flow, at rated KW, cfm (m^3/min) 1514 (42.9)
Exhaust Temp, at rated KW, °F (°C) 905 (485)

SOUND LEVELS MEASURED IN dB(A)

	Open Set	Level 2 Encl.
Level 2, Critical Silencer	86	75
Level 3, Hospital Silencer		70

Note: Open sets (no enclosure) have silencer system choices due to unknown job-site applications. Level 2 enclosure has installed critical silencer with upgrade to Level 3 hospital silencer. Sound tests are averaged from several test points and taken at 23 ft. (7 m) from source of noise at normal operation.

DERATE GENERATOR FOR ALTITUDE

3% per 1000 ft.(305 meters) above 3000 ft. (914 meters) from sea level.

DERATE GENERATOR FOR TEMPERATURE

2% per 10°F (12°C) above 104°F (40°C)

DIMENSIONS AND WEIGHTS

	Open Set	Level 2 Enclosure
Length in (cm)	110 (280)	134 (341)
Width in (cm)	48 (122)	48 (122)
Height in (cm)	55 (140)	72.5 (183)
1 Ø Net Weight lbs (kg)	3709 (1682)	4729 (2145)
1 Ø Ship Weight lbs (kg)	3959 (1796)	5049 (2290)
3 Ø Net Weight lbs (kg)	3404 (1544)	4364 (1979)
3 Ø Ship Weight lbs (kg)	3654 (1657)	4684 (2125)

DEEP SEA 7420 DIGITAL MICROPROCESSOR CONTROLLER



Deep Sea 7420

The "**7420**" controller is an auto start mains (utility) failure module for single gen-set applications. This controller includes a backlit LCD display which continuously displays the status of the engine and generator at all times.

The "**7420**" controller will also monitor speed, frequency, voltage, current, oil pressure, coolant temp., and fuel levels. These modules have been designed to display warning and shut down status. It also includes: (11) configurable inputs • (8) configurable outputs • voltage monitoring • mains (utility) failure detection • (250) event logs • configurable timers • automatic shutdown or warning during fault detection • remote start (on load) • engine preheat • advanced metering capability • hour meter • text LCD displays • protected solid state outputs • test buttons for: stop/reset • manual mode • auto mode • lamp test • start button • power monitoring (kWh, kVAr, kVAh, kVArh)

This controller includes expansion features including RS232, RS484 (using MODBUS-RTU/TCP), direct USB connection with PC, expansion optioned using DSENet for remote annunciation and remote relay interfacing for a distance of up to 3300FT. The controller software is freely downloadable from the internet and allows monitoring with direct USB cable, LAN, or by internet via the built in web interface.



Further expansion is available by adding the optional "WebNet" gateway interface module. This device will allow comprehensive monitoring of the generator via the cloud including identification, location, and status. Some advantages of this module include: reduced site visits and maintenance costs • remote fuel management • fault analysis • asset tracking • automatic system alerts • maximized system up-time.

REGULAR SESSION CITY COUNCIL MEETING PACKET FOR THE MEETING TO BE HELD ON SEPTEMBER 20, 2021

STANDARD FEATURES FOR MODEL SPJD-2100-60 HZ

CONTROL PANEL:

Deep Sea 7420 digital microprocessor with logic allows programming in the field. Controller has:

- STOP-MANUAL-AUTO modes and automatic engine shutdowns, signaled by full text LCD indicators:
- Low oil pressure
- High engine temp
- Low Radiator Level
- Three auxiliary alarms
- Battery fail alarm
- Engine fail to start
- Engine over speed
- Engine under speed
- Over & under voltage

Also included is tamper-proof engine hour meter

ENGINE:

Full flow oil filter • Air filter • Oil pump • Solenoid type starter motor • Hi-temp radiator • Jacket water pump • Thermostat • Pusher fan and guard • Exhaust manifold 12 VDC battery charging alternator • Flexible exhaust connector • "Isochronous" duty, electronic governor • Vibration isolators • Closed coolant recovery system with 50/50 water to anti-freeze mixture • flexible oil & radiator drain hose.

AC GENERATOR SYSTEM:

AC generator • Shunt excited • Brushless design • Circuit Breaker installed and wired to gen-set • Direct connection to engine with flex disc • Class H, 180°C insulation • Self ventilated • Drip proof construction • UL Certified

VOLTAGE REGULATOR:

½% Voltage regulation • EMI filter • Under-speed protection • Over-excitation protection • total encapsulation

DC ELECTRICAL SYSTEM:

Battery tray • Battery cables • Battery hold down straps • 2-stage battery float charger with maintaining & recharging automatic charge stages

WEATHER/SOUND PROOF ALUMINUM HOUSING CORROSION RESISTANT PROTECTION CONSISTING OF:

- 9 Heated And Agitated Wash Stages
- Zinc Phosphate Etching-coating Stage
- Final Baked On Enamel Powder Coat
- 18/8 Stainless Steel Hardware

Design & specifications subject to change without prior notice. Dimensions shown are approximate. Contact Gillette for certified drawings.
DO NOT USE DIMENSIONS FOR INSTALLATION PURPOSES.

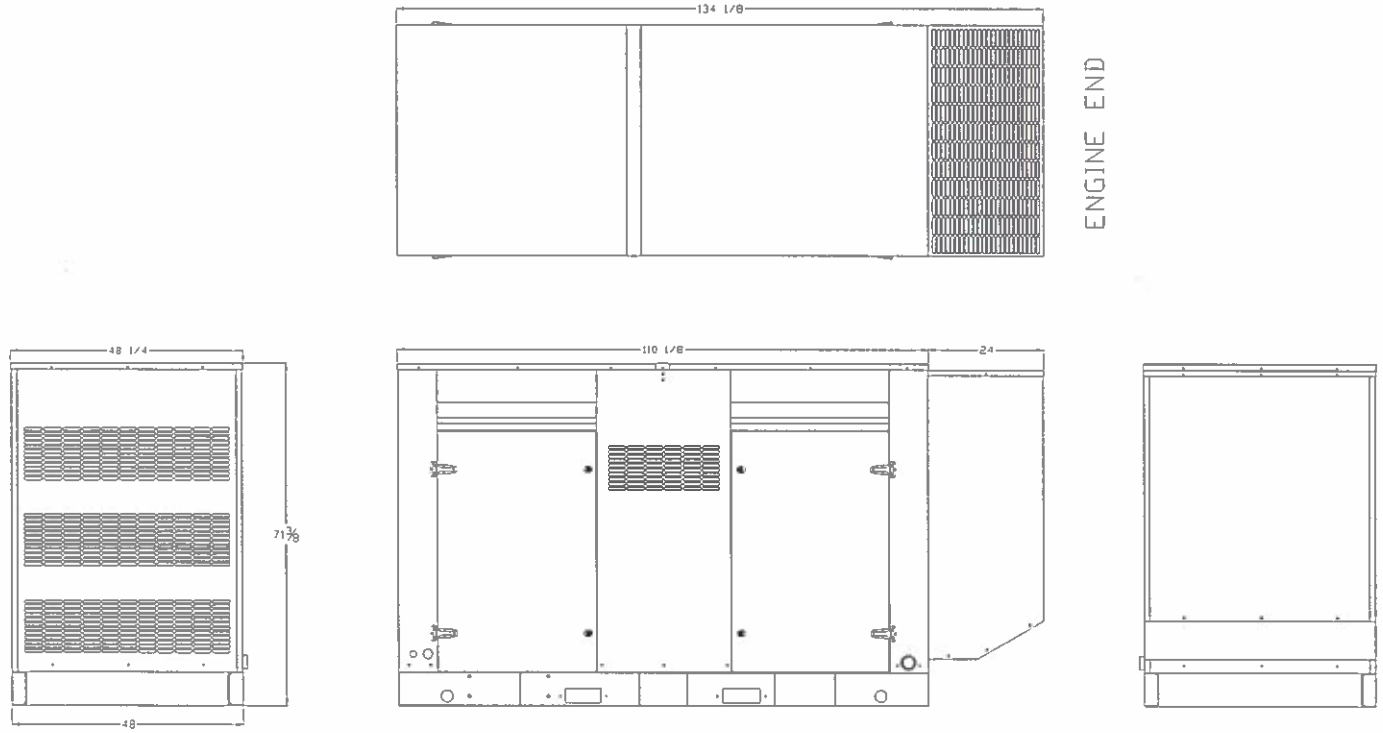

REGULAR SESSION CITY COUNCIL MEETING PACKET FOR THE MEETING TO BE HELD ON SEPTEMBER 20, 2021

Molded Case Circuit Breakers

Power Defense ™ UL Global Series

Part Number: PDG33G0400B2NJNNNNNN

Powering Business Worldwide

Datasheet creation date: 02/12/2019

Technical drawings

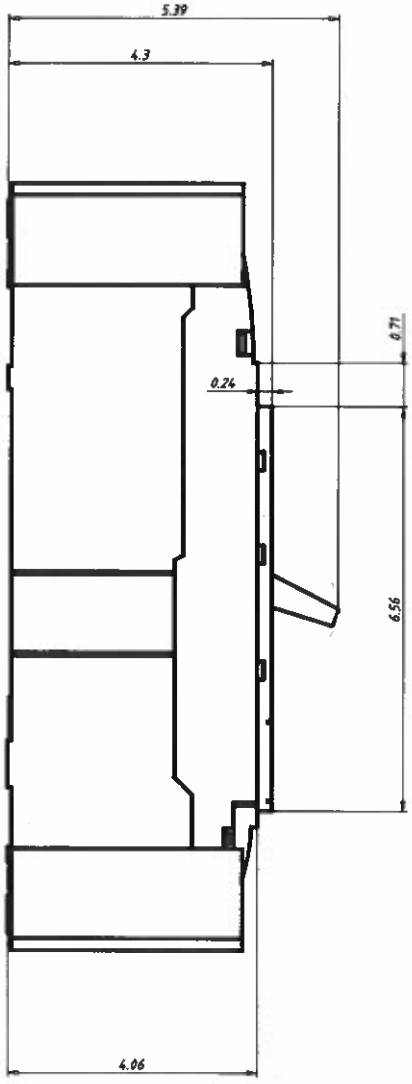

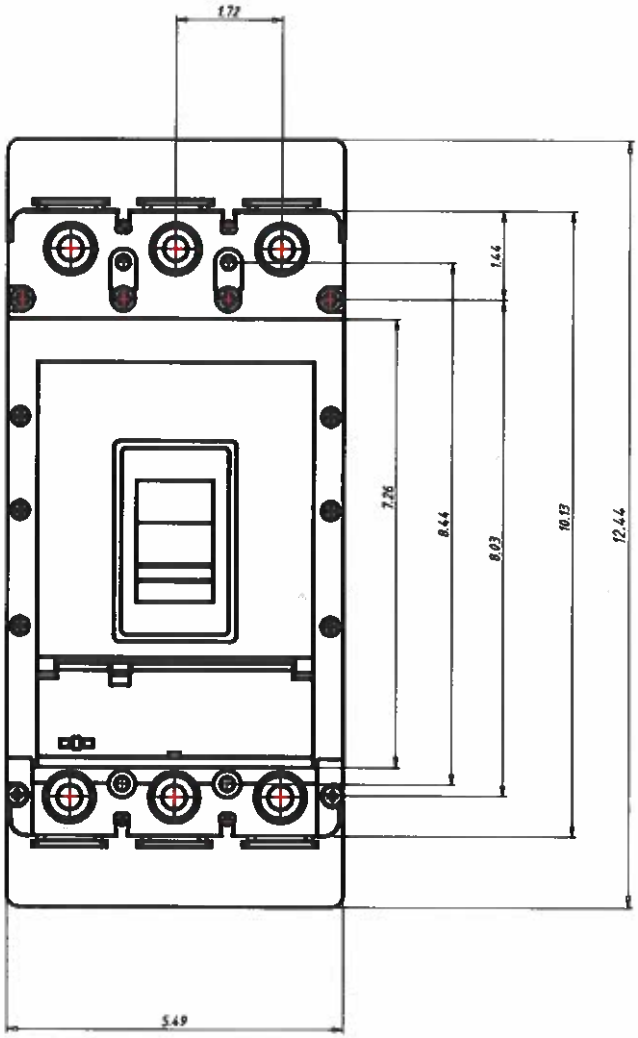

REGULAR SESSION CITY COUNCIL MEETING PACKET FOR THE MEETING TO BE HELD ON SEPTEMBER 20, 2021

Molded Case Circuit Breakers

Power Defense ™ UL Global Series

Part Number: PDG33G0400B2NJNNNNNN

Powering Business Worldwide

Datasheet creation date: 02/12/2019

PRODUCT VIEW *(Use Mouse to Rotate and Zoom)*

Eaton's Power Defense™ molded case circuit breakers, a globally rated platform designed to help keep your power system safe with latest protection technology. Engineered for the future: IoT and Industry 4.0 features such as built-in communications, advanced energy metering, and algorithms that signal breaker maintenance; zone selective interlock technology that clears faults quickly and locally; ArcFlash reduction options that help protect your people, and not to mention Eaton's best-inclass support and service.

Tech Data for Configured Product

Power Defense Catalog Number	PDG33G0400B2NJNNNNNN
Frame Size	Frame 3
Poles	3 Pole
Voltage	480V AC
Interruption or Breaking Capacity (Icu/Ics)	35kA
Continuous Current Rating (In)	400A
Trip Unit Type	PXR10
Trip Unit Options 1	LSI
Trip Unit Options 2	None
Indicating Accessories	None
Indicating Accessories Terminal	None
Tripping Accessories	None
Tripping Accessory Terminal	None
Tripping Accessory Voltage	None
Line Type Description	Option 1 - Standard Terminal
Line Conductor Options	(2) 3/0 - 250
Line Terminal Type	Aluminum
Load Type Description	Option 1 - Standard Terminal
Load Conductor Options	(2) 3/0 - 250
Load Terminal Type	Aluminum
Special Options - Type of Modification	None
Details	None
Additional Description	None

REGULAR SESSION CITY COUNCIL MEETING PACKET FOR THE MEETING TO BE HELD ON SEPTEMBER 20, 2021

DSEGenset

DSE

DSE7410/20

AUTO START & AUTO MAINS FAILURE MODULES

FEATURES

DSE7420



DSE7410



KEY FEATURES

- Configurable inputs (11)
- Configurable outputs (8)
- Voltage measurement
- Mains (utility) failure detection
- Dedicated load test button
- kW overload alarms
- Comprehensive electrical protection
- RS232, RS485 & Ethernet remote communications
- Modbus RTU/TCP
- PLC functionality
- Multi event exercise timer
- Back-lit LCD 4-line text display
- Multiple display languages
- Automatic start/Manual start
- Audible alarm
- Fixed and flexible LED indicators
- Event log (250)
- Engine protection
- Fault condition notification to a designated PC
- Front panel mounting
- Protected front panel programming
- Configurable alarms and timers
- Configurable start and stop timers
- Five key menu navigation
- Front panel editing with PIN protection
- 3 configurable maintenance alarms
- CAN and magnetic pick-up/Alt. sensing
- Fuel usage monitor and low fuel alarms
- Charge alternator failure alarm
- Manual speed control (on compatible CAN engines)
- Manual fuel pump control
- "Protections disabled" feature
- Reverse power protection
- Power monitoring (kW h, kV Ar, kV A h, kV Ar h)
- Load switching (load shedding and dummy load outputs)
- Automatic load transfer (DSE7420)
- Unbalanced load protection
- Independent earth fault trip
- Fully configurable via DSE Configuration Suite PC software
- Configurable display languages
- Remote SCADA monitoring via DSE Configuration Suite PC software
- Advanced SMS messaging (additional external modem required)
- Start & stop capability via SMS messaging
- Additional display screens to help with modem diagnostics
- DSENet® expansion
- Integral PLC editor

KEY BENEFITS

- RS232, RS485 & Ethernet can be used at the same time
- DSENet® connection for system expansion
- PLC functionality
- Five step dummy load support
- Five step load shedding support
- High number of inputs and outputs
- Worldwide language support
- Direct USB connection to PC
- Ethernet monitoring
- USB host
- Data logging & trending

SPECIFICATION

DC SUPPLY
CONTINUOUS VOLTAGE RATING
8 V to 35 V Continuous

CRANKING DROPOUTS
Able to survive 0 V for 50 mS, providing supply was at least 10 V before dropout and supply recovers to 5 V. This is achieved without the need for internal batteries

MAXIMUM OPERATING CURRENT
260 mA at 12 V, 130 mA at 24 V

MAXIMUM STANDBY CURRENT
120 mA at 12 V, 65 mA at 24 V

CHARGE FAIL/EXCITATION RANGE
0 V to 35 V

OUTPUTS
OUTPUT A (FUEL)
15 A DC at supply voltage

OUTPUT B (START)
15 A DC at supply voltage

OUTPUTS C & D
8 A AC at 250 V AC (Volt free)

AUXILIARY OUTPUTS E,F,G,H,I & J
2 A DC at supply voltage

GENERATOR
VOLTAGE RANGE
15 V to 333 V AC (L-N)

FREQUENCY RANGE
3.5 Hz to 75 Hz

MAINS (UTILITY) (DSE7420)
VOLTAGE RANGE
15 V to 333 V AC (L-N)

FREQUENCY RANGE
3.5 Hz to 75 Hz

BUS (DSE7410)
VOLTAGE RANGE
15 V to 333 V AC (L-N)

FREQUENCY RANGE
3.5 Hz to 75 Hz

MAGNETIC PICK UP
VOLTAGE RANGE
+/- 0.5 V to 70 V

FREQUENCY RANGE
10,000 Hz (max)

DIMENSIONS
OVERALL
240 mm x 172 mm x 57 mm
9.4" x 6.8" x 2.2"

PANEL CUTOUT
220 mm x 160 mm
8.7" x 6.3"

MAXIMUM PANEL THICKNESS
8 mm
0.3"

STORAGE TEMPERATURE RANGE
-40 °C to +85 °C

RELATED MATERIALS

TITLE	PART NO'S
DSE7410 Installation Instructions	053-085
DSE7420 Installation Instructions	053-088
DSE74xx Quick Start Guide	057-162
DSE74xx Operator Manual	057-161
DSE74xx PC Configuration Suite Manual	057-160

DEEP SEA ELECTRONICS PLC UK
Highfield House, Hunmanby Industrial Estate, Hunmanby YO14 0PH
TELEPHONE +44 (0) 1723 890099 **FACSIMILE** +44 (0) 1723 893303
EMAIL sales@deepseaplc.com **WEBSITE** www.deepseaplc.com

DEEP SEA ELECTRONICS INC USA
3230 Williams Avenue, Rockford, IL 61101-2668 USA
TELEPHONE +1 (815) 316 8706 **FACSIMILE** +1 (815) 316 8708
EMAIL sales@deepseausa.com **WEBSITE** www.deepseausa.com

Deep Sea Electronics Plc maintains a policy of continuous development and reserves the right to change the details shown on this data sheet without prior notice. The contents are intended for guidance only.

Registered in England & Wales No.01319649
VAT No.316923457

REGULAR SESSION CITY COUNCIL MEETING PACKET FOR THE MEETING TO BE HELD ON SEPTEMBER 20, 2021

DSEGenset

DSE

DSE7410/20

AUTO START & AUTO MAINS FAILURE MODULES

FEATURES

The DSE7410 is an Auto Start Control Module and the DSE7420 is an Auto Mains (Utility) Failure Control Module suitable for a wide variety of single, diesel or gas, gen-set applications.

A sophisticated module monitoring an extensive number of engine parameters, the DSE74xx will annunciate warnings, shutdown and engine status information on the back-lit LCD screen, illuminated LED, remote PC, audible alarm and via SMS text alerts. The module includes RS232, RS485 & Ethernet ports as well as dedicated terminals for system expansion.

The DSE7400 Series modules are compatible with electronic (CAN) and non-electronic (magnetic pick-up/alternator sensing) engines and offer a comprehensive number of flexible inputs, outputs and extensive engine protections so the system can be easily adapted to meet the most demanding industry paralleling requirements.

The modules can be easily configured using the DSE Configuration Suite Software. Selected front panel editing is also available.

ENVIRONMENTAL TESTING STANDARDS

ELECTRO-MAGNETIC COMPATIBILITY
BS EN 61000-6-2
EMC Generic Immunity Standard for the Industrial Environment
BS EN 61000-6-4
EMC Generic Emission Standard for the Industrial Environment

ELECTRICAL SAFETY
BS EN 60950
Safety of Information Technology Equipment, including Electrical Business Equipment

TEMPERATURE
BS EN 60068-2-1
Ab/Ae Cold Test -30 °C
BS EN 60068-2-2
Bb/Be Dry Heat +70 °C

VIBRATION
BS EN 60068-2-6
Ten sweeps in each of three major axes
5 Hz to 8 Hz @ +/-7.5 mm,
8 Hz to 500 Hz @ 2 gn

HUMIDITY
BS EN 60068-2-30
Db Damp Heat Cyclic 20/55 °C
@ 95% RH 48 Hours
BS EN 60068-2-78
Cab Damp Heat Static 40 °C
@ 93% RH 48 Hours

SHOCK
BS EN 60068-2-27
Three shocks in each of three major axes
15 gn in 11 mS

DEGREES OF PROTECTION PROVIDED BY ENCLOSURES
BS EN 60529
IP65 - Front of module when installed into the control panel with the supplied sealing gasket.

COMPREHENSIVE FEATURE LIST TO SUIT A WIDE VARIETY OF GEN-SET APPLICATIONS

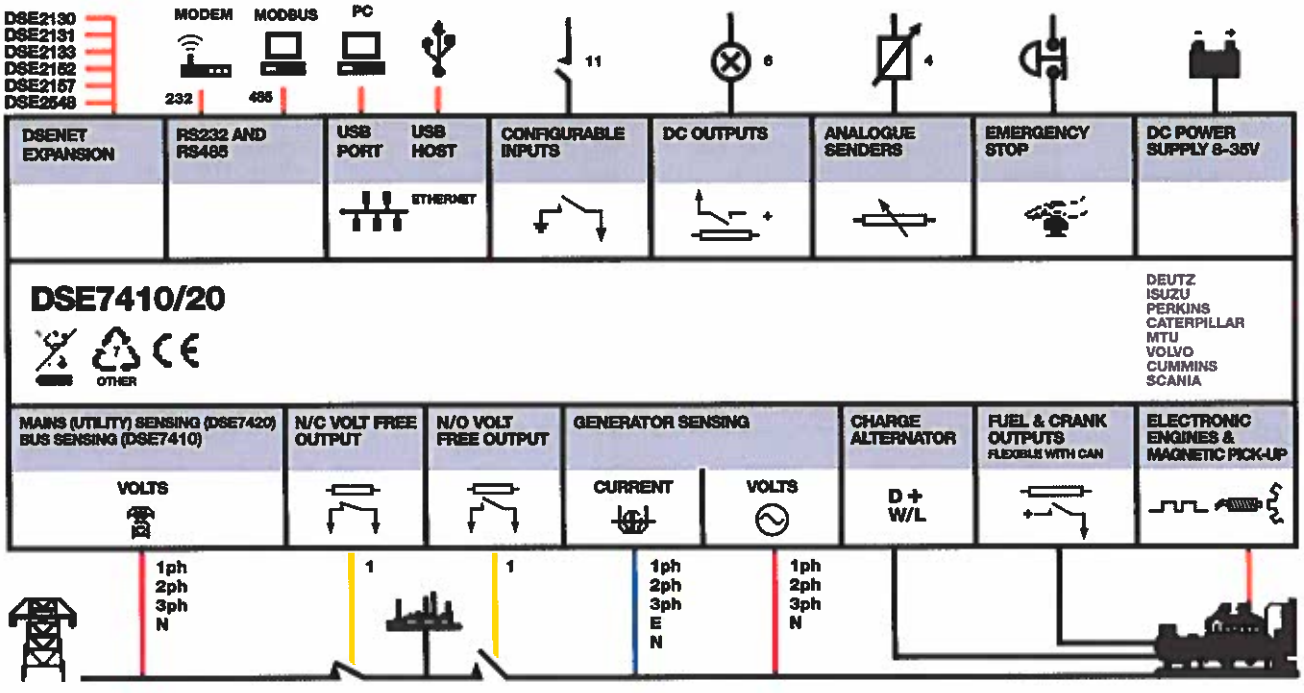

ISSUE 1

REGULAR SESSION CITY COUNCIL MEETING PACKET FOR THE MEETING TO BE HELD ON SEPTEMBER 20, 2021

REGULAR SESSION CITY COUNCIL MEETING PACKET FOR THE MEETING TO BE HELD ON SEPTEMBER 20, 2021

APPROVED DOCUMENT

STAMFORD

Head Office Address:
Barnack Road, Stamford
Lincolnshire, PE9 2NB
United Kingdom
Tel: +44 (0) 1780 484000
Fax: +44 (0) 1780 484100

www.cumminsgeneratortechnologies.com

Copyright 2010, Cummins Generator Technologies Ltd, All Rights Reserved
Stamford and AvK are registered trade marks of Cummins Generator Technologies Ltd
Cummins and the Cummins logo are registered trade marks of Cummins Inc.

UCI274H

STAMFORD

Winding 17 / 0.8 Power Factor

60Hz

RATINGS

Class - Temp Rise	Cont. F - 105/40°C	Cont. H - 125/40°C	Standby - 150/40°C	Standby - 163/27°C
Series Star (V)	600	600	600	600
Parallel Star (V)	300	300	300	300
Series Delta (V)	346	346	346	346
kVA	235.0	255.0	275.0	280.0
kW	188.0	204.0	220.0	224.0
Efficiency (%)	93.7	93.6	93.4	93.3
kW Input	200.6	218.0	235.6	240.0

APPROVED

DIMENSIONS

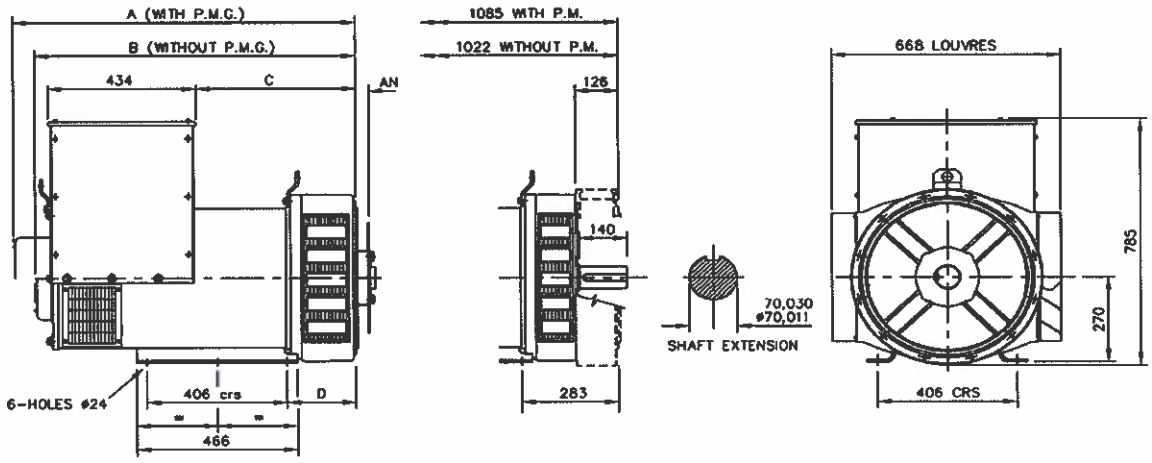

SINGLE BEARING MACHINES ONLY						
ADAPTOR	A	B	C	D	COUPLING DISCS	AN
SAE 1	1018,3	955,3	479,3	216,3	SAE 10	53,98
SAE 2	1004	941	465	202	SAE 11,5	39,68
SAE 3	1004	941	465	202	SAE 14	25,40

REGULAR SESSION CITY COUNCIL MEETING PACKET FOR THE MEETING TO BE HELD ON SEPTEMBER 20, 2021

UCI274H
Winding 17

STAMFORD

THREE PHASE EFFICIENCY CURVES

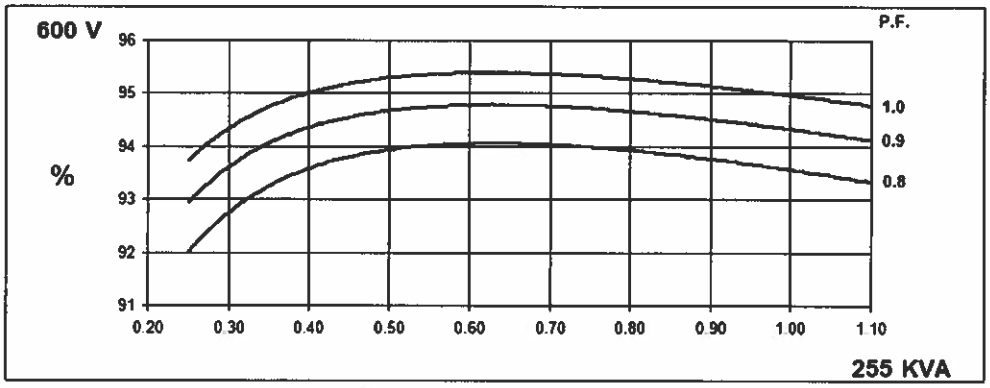

Three-phase Short Circuit Decrement Curve. No-load Excitation at Rated Speed Based on star (wye) connection.

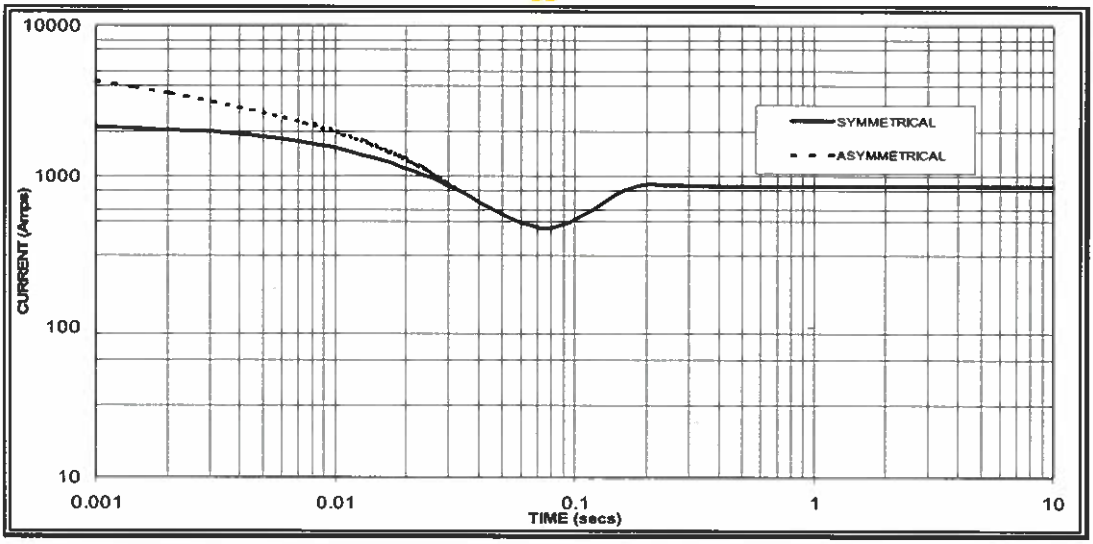

Sustained Short Circuit = 860 Amps

Note
The following multiplication factor should be used to convert the values from curve for the various types of short circuit :

	3-phase	2-phase L-L	1-phase L-N
Instantaneous	x 1.00	x 0.87	x 1.30
Minimum	x 1.00	x 1.80	x 3.20
Sustained	x 1.00	x 1.50	x 2.50
Max. sustained duration	10 sec.	5 sec.	2 sec.

All other times are unchanged

REGULAR SESSION CITY COUNCIL MEETING PACKET FOR THE MEETING TO BE HELD ON SEPTEMBER 20, 2021

UCI274H

STAMFORD

Winding 17

SX

Locked Rotor Motor Starting Curves

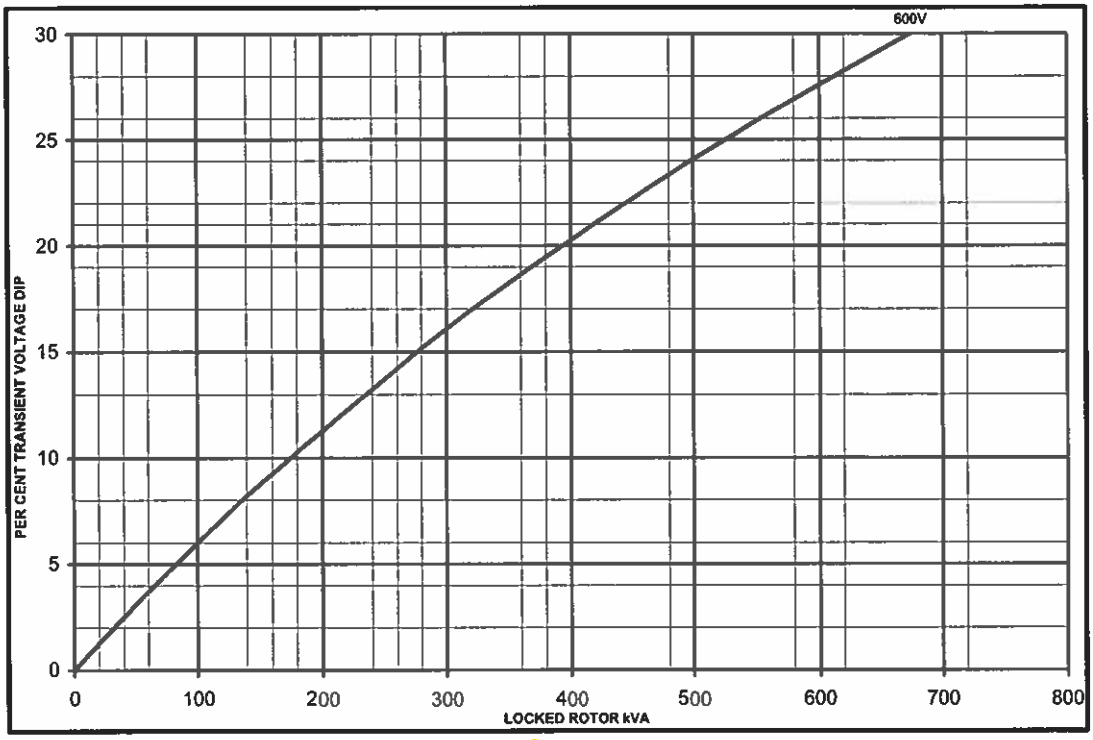

MX

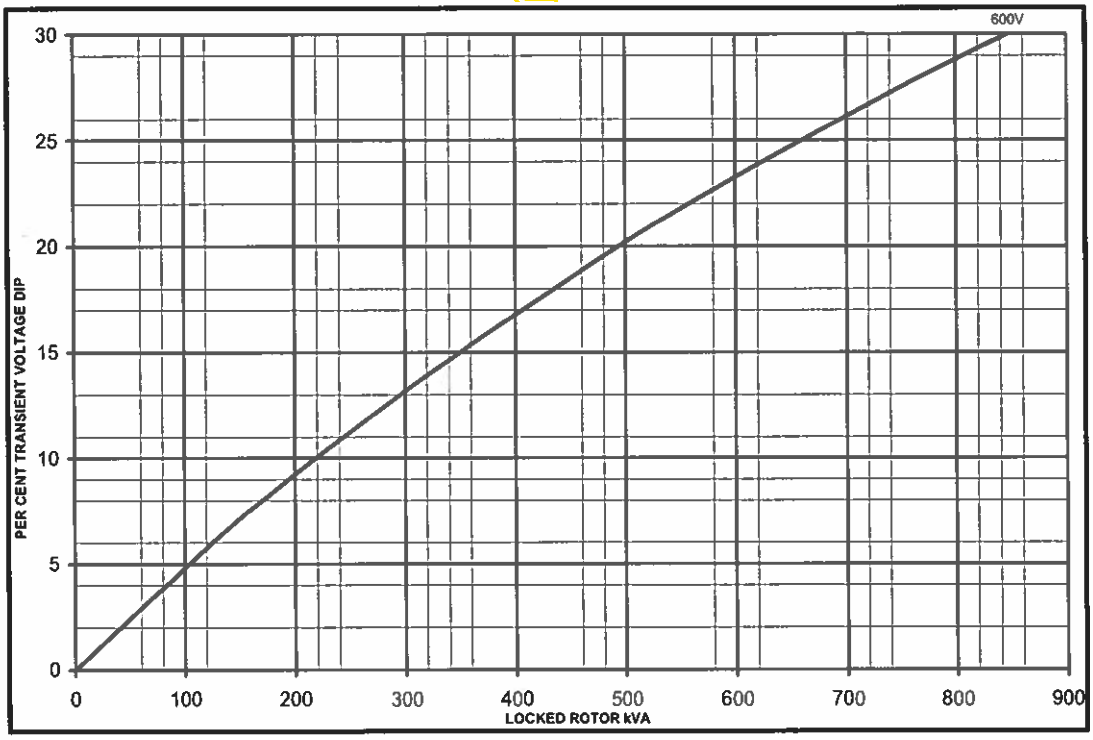

OCU

REGULAR SESSION CITY COUNCIL MEETING PACKET FOR THE MEETING TO BE HELD ON SEPTEMBER 20, 2021

UCI274H

STAMFORD

WINDING 17

CONTROL SYSTEM	SEPARATELY EXCITED BY P.M.G.		
A.V.R.	MX321	MX341	
VOLTAGE REGULATION	± 0.5 %	± 1.0 %	With 4% ENGINE GOVERNING
SUSTAINED SHORT CIRCUIT	REFER TO SHORT CIRCUIT DECREMENT CURVES (page 5)		

CONTROL SYSTEM	SELF EXCITED		
A.V.R.	SX460	AS440	
VOLTAGE REGULATION	± 1.5 %	± 1.0 %	With 4% ENGINE GOVERNING
SUSTAINED SHORT CIRCUIT	SERIES 4 CONTROL DOES NOT SUSTAIN A SHORT CIRCUIT CURRENT		

INSULATION SYSTEM	CLASS H	
PROTECTION	IP23	
RATED POWER FACTOR	0.8	
STATOR WINDING	DOUBLE LAYER CONCENTRIC	
WINDING PITCH	TWO THIRDS	
WINDING LEADS	12	
STATOR WDG. RESISTANCE	0.028 Ohms PER PHASE AT 22°C SERIES STAR CONNECTED	
ROTOR WDG. RESISTANCE	1.82 Ohms at 22°C	
EXCITER STATOR RESISTANCE	20 Ohms at 22°C	
EXCITER ROTOR RESISTANCE	0.091 Ohms PER PHASE AT 22°C	
R.F.I. SUPPRESSION	BS EN 61000-6-2 & BS EN 61000-6-4,VDE 0875G, VDE 0875N. refer to factory for others	
WAVEFORM DISTORTION	NO LOAD < 1.5% NON-DISTORTING BALANCED LINEAR LOAD < 5.0%	
MAXIMUM OVERSPEED	2250 Rev/Min	
BEARING DRIVE END	BALL. 6315-2RS (ISO)	
BEARING NON-DRIVE END	BALL. 6310-2RS (ISO)	
	1 BEARING	2 BEARING
WEIGHT COMP. GENERATOR	626 kg	641 kg
WEIGHT WOUND STATOR	253 kg	253 kg
WEIGHT WOUND ROTOR	227.53 kg	216.57 kg
WR² INERTIA	1.9349 kgm²	1.8843 kgm²
SHIPPING WEIGHTS in a crate	659 kg	673 kg
PACKING CRATE SIZE	123 x 67 x 103(cm)	123 x 67 x 103(cm)
TELEPHONE INTERFERENCE	THF<2%	TIF<50
COOLING AIR	0.617 m³/sec 1308 cfm	
VOLTAGE SERIES STAR	600V	
VOLTAGE PARALLEL STAR	300V	
VOLTAGE SERIES DELTA	346V	
kVA BASE RATING FOR REACTANCE VALUES	255	
Xd DIR. AXIS SYNCHRONOUS	2.07	
X'd DIR. AXIS TRANSIENT	0.16	
X"d DIR. AXIS SUBTRANSIENT	0.11	
Xq QUAD. AXIS REACTANCE	1.26	
X"q QUAD. AXIS SUBTRANSIENT	0.17	
X_L LEAKAGE REACTANCE	0.08	
X_2 NEGATIVE SEQUENCE	0.13	
X_0 ZERO SEQUENCE	0.08	
REACTANCES ARE SATURATED	VALUES ARE PER UNIT AT RATING AND VOLTAGE INDICATED	
T'd TRANSIENT TIME CONST.	0.042s	
T"d SUB-TRANSTIME CONST.	0.012s	
T'do O.C. FIELD TIME CONST.	1.1s	
Ta ARMATURE TIME CONST.	0.012s	
SHORT CIRCUIT RATIO	1/Xd	

AFFROVED DRAFT

REGULAR SESSION CITY COUNCIL MEETING PACKET FOR THE MEETING TO BE HELD ON SEPTEMBER 20, 2021

SPECIFICATIONS & OPTIONS

STANDARDS

Stamford industrial generators meet the requirements of BS EN 60034 and the relevant section of other international standards such as BS5000, VDE 0530, NEMA MG1-32, IEC34, CSA C22.2-100, AS1359.
Other standards and certifications can be considered on request.

VOLTAGE REGULATORS

SX460 AVR - STANDARD

With this self excited control system the main stator supplies power via the Automatic Voltage Regulator (AVR) to the exciter stator. The high efficiency semiconductors of the AVR ensure positive build-up from initial low levels of residual voltage.
The exciter rotor output is fed to the main rotor through a three phase full wave bridge rectifier. This rectifier is protected by a surge suppressor against surges caused, for example, by short circuit.

AS440 AVR

With this self-excited system the main stator provides power via the AVR to the exciter stator. The high efficiency semi-conductors of the AVR ensure positive build-up from initial low levels of residual voltage.
The exciter rotor output is fed to the main rotor through a three-phase full-wave bridge rectifier. The rectifier is protected by a surge suppressor against surges caused, for example, by short circuit or out-of-phase paralleling.
The AS440 will support a range of electronic accessories, including a 'droop' Current Transformer (CT) to permit parallel operation with other ac generators.

MX341 AVR

This sophisticated AVR is incorporated into the Stamford Permanent Magnet Generator (PMG) control system.
The PMG provides power via the AVR to the main exciter, giving a source of constant excitation power independent of generator output. The main exciter output is then fed to the main rotor, through a full wave bridge, protected by a surge suppressor. The AVR has in-built protection against sustained over-excitation, caused by internal or external faults. This de-excites the machine after a minimum of 5 seconds.
An engine relief load acceptance feature can enable full load to be applied to the generator in a single step.
If three-phase sensing is required with the PMG system the MX321 AVR must be used.
We recommend three-phase sensing for applications with greatly unbalanced or highly non-linear loads.

MX321 AVR

The most sophisticated of all our AVRs combines all the features of the MX341 with, additionally, three-phase rms sensing, for improved regulation and performance.
Over voltage protection is built-in and short circuit current level adjustments is an optional facility.

WINDINGS & ELECTRICAL PERFORMANCE

All generator stators are wound to 2/3 pitch. This eliminates triplen (3rd, 9th, 15th ...) harmonics on the voltage waveform and is found to be the optimum design for trouble-free supply of non-linear loads. The 2/3 pitch design avoids excessive neutral currents sometimes seen with higher winding pitches, when in parallel with the mains. A fully connected damper winding reduces oscillations during paralleling. This winding, with the 2/3 pitch and carefully selected pole and tooth designs, ensures very low waveform distortion.

TERMINALS & TERMINAL BOX

Standard generators are 3-phase reconnectable with 12 ends brought out to the terminals, which are mounted on a cover at the non-drive end of the generator. A sheet steel terminal box contains the AVR and provides ample space for the customers' wiring and gland arrangements. It has removable panels for easy access.

SHAFT & KEYS

All generator rotors are dynamically balanced to better than BS6861:Part 1 Grade 2.5 for minimum vibration in operation.

INSULATION/IMPREGNATION

The insulation system is class 'H'.
All wound components are impregnated with materials and processes designed specifically to provide the high build required for static windings and the high mechanical strength required for rotating components.

QUALITY ASSURANCE

Generators are manufactured using production procedures having a quality assurance level to BS EN ISO 9001.

The stated voltage regulation may not be maintained in the presence of certain radio transmitted signals. Any change in performance will fall within the limits of Criteria 'B' of EN 61000-6-2:2001. At no time will the steady-state voltage regulation exceed 2%.

DE RATES

All values tabulated on page 6 are subject to the following reductions

5% when air inlet filters are fitted.
3% for every 500 metres by which the operating altitude exceeds 1000 metres above mean sea level.
3% for every 5 C by which the operational ambient temperature exceeds 40 C.
Note: Requirement for operating in an ambient exceeding 60 C must be referred to the factory.

NB Continuous development of our products entitles us to change specification details without notice, therefore they must not be regarded as binding.

Front cover drawing typical of product range.

APPROVED DOCUMENT

REGULAR SESSION CITY COUNCIL MEETING PACKET FOR THE MEETING TO BE HELD ON SEPTEMBER 20, 2021

STAMFORD®

UCI274H - Winding 17

Technical Data Sheet

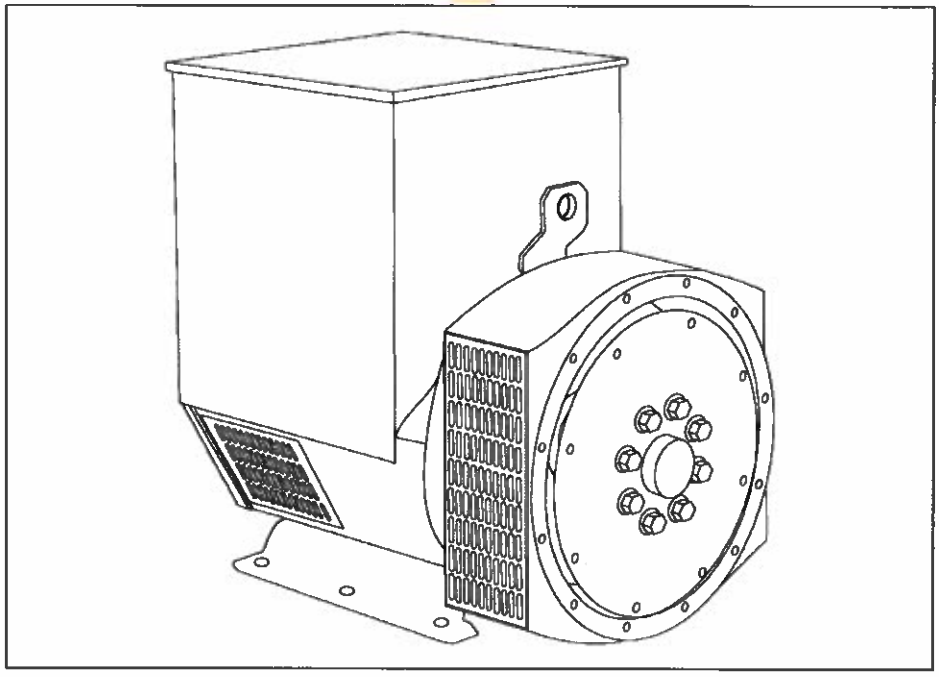

REGULAR SESSION CITY COUNCIL MEETING PACKET FOR THE MEETING TO BE HELD ON SEPTEMBER 20, 2021

APPROVED DOCUMENT

STAMFORD

Head Office Address:
Barnack Road, Stamford
Lincolnshire, PE9 2NB
United Kingdom
Tel: +44 (0) 1780 484000
Fax: +44 (0) 1780 484100

www.cumminsgeneratortechnologies.com

Copyright 2010, Cummins Generator Technologies Ltd, All Rights Reserved
Stamford and AvK are registered trade marks of Cummins Generator Technologies Ltd
Cummins and the Cummins logo are registered trade marks of Cummins Inc.

REGULAR SESSION CITY COUNCIL MEETING PACKET FOR THE MEETING TO BE HELD ON SEPTEMBER 20, 2021

UCDI274J

STAMFORD

Winding 311 / 0.8 Power Factor

RATINGS

	Class - Temp Rise	Cont. F - 105/40°C				Cont. H - 125/40°C				Standby - 150/40°C				Standby - 163/27°C			
50 Hz	Series Star (V)	380	400	415	440	380	400	415	440	380	400	415	440	380	400	415	440
	Parallel Star (V)	190	200	208	220	190	200	208	220	190	200	208	220	190	200	208	220
	Series Delta (V)	220	230	240	254	220	230	240	254	220	230	240	254	220	230	240	254
	kVA	210	210	210	N/A	230	230	230	N/A	250	250	250	N/A	260	260	260	N/A
	kW	168	168	168	N/A	184	184	184	N/A	200	200	200	N/A	208	208	208	N/A
	Efficiency (%)	92.8	92.8	92.9	N/A	92.4	92.6	92.6	N/A	92.1	92.2	92.3	N/A	91.8	92.0	92.1	N/A
	kW Input	181.0	181.0	180.8	N/A	199.1	198.7	198.7	N/A	217.2	216.9	216.7	N/A	226.6	226.1	225.8	N/A
60 Hz	Series Star (V)	416	440	460	480	416	440	460	480	416	440	460	480	416	440	460	480
	Parallel Star (V)	208	220	230	240	208	220	230	240	208	220	230	240	208	220	230	240
	Series Delta (V)	240	254	266	277	240	254	266	277	240	254	266	277	240	254	266	277
	kVA	250	264	275	275	269	281	294	300	288	300	313	319	294	306	319	325
	kW	200.0	211.2	220.0	220.0	215.2	224.8	235.2	240.0	230.4	240.0	250.4	255.2	235.2	244.8	255.2	260.0
	Efficiency (%)	93.0	93.0	93.0	93.0	92.8	92.8	92.7	92.8	92.5	92.5	92.5	92.5	92.4	92.4	92.4	92.4
	kW Input	215.1	227.1	236.6	236.6	231.9	242.2	253.7	258.6	249.1	259.5	270.7	275.9	254.5	264.9	276.2	281.4

APPROVED DOC!

DIMENSIONS

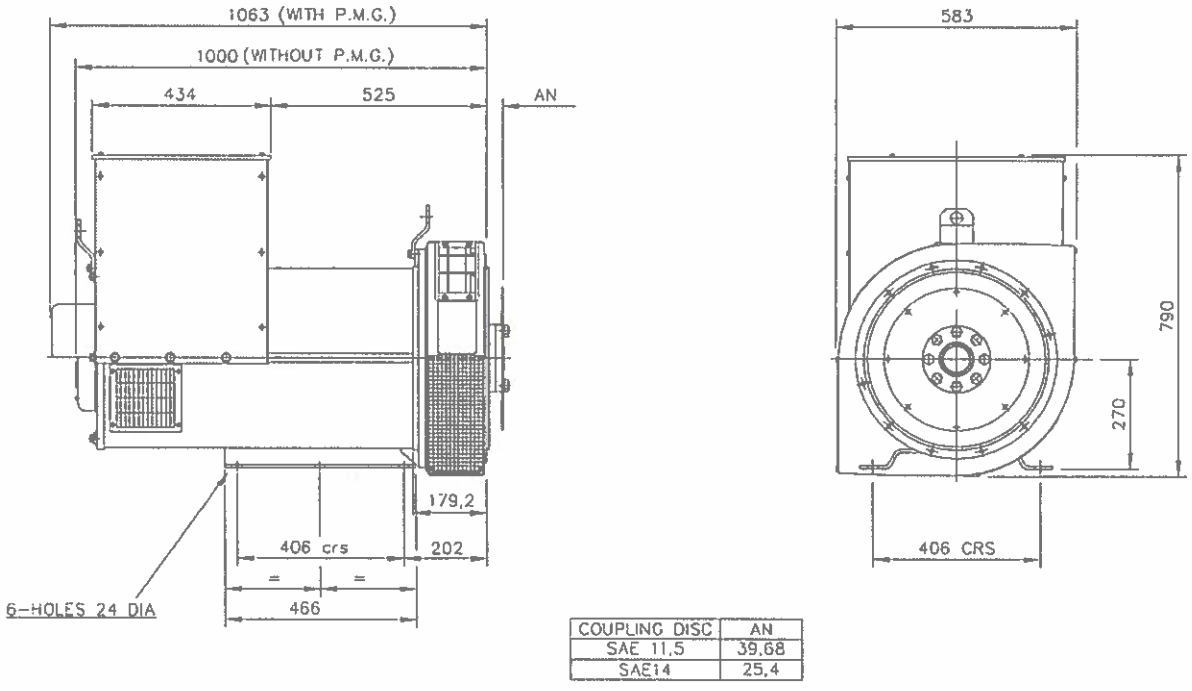

COUPLING DISC	AN
SAE 11.5	39.68
SAE14	25.4

REGULAR SESSION CITY COUNCIL MEETING PACKET FOR THE MEETING TO BE HELD ON SEPTEMBER 20, 2021

Three-phase Short Circuit Decrement Curve. No-load Excitation at Rated Speed
Based on star (wye) connection.

50 Hz

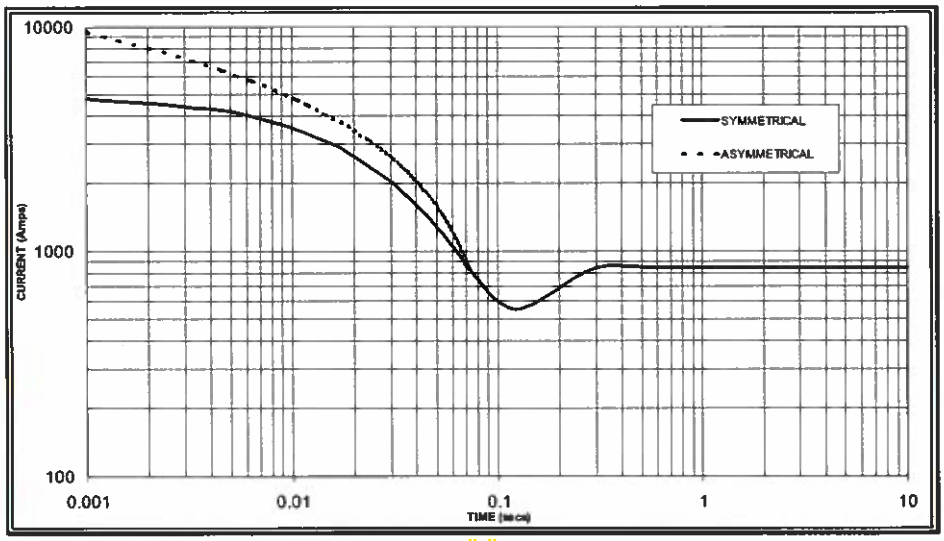

Sustained Short Circuit = 850 Amps

60 Hz

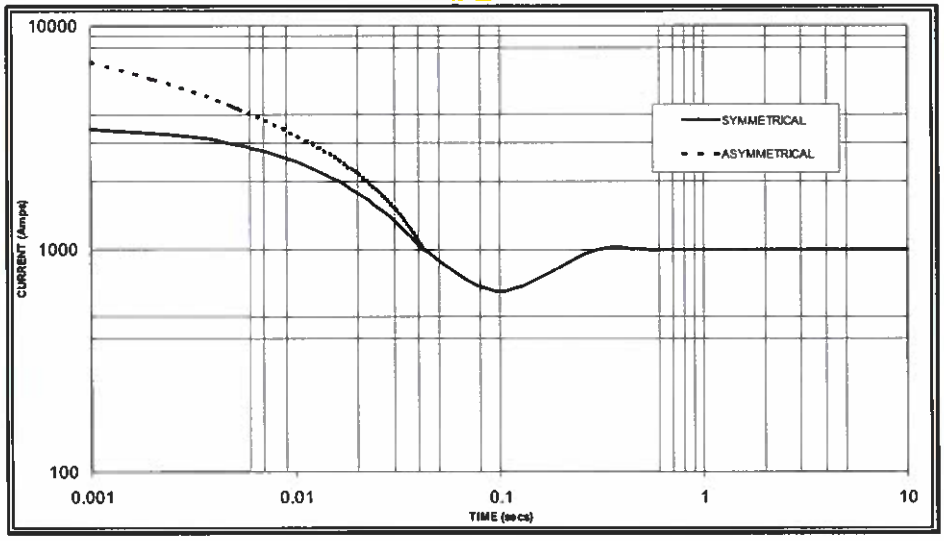

Sustained Short Circuit = 1,000 Amps

Note 1

The following multiplication factors should be used to adjust the values from curve between time 0.001 seconds and the minimum current point in respect of nominal operating voltage :

50Hz		60Hz	
Voltage	Factor	Voltage	Factor
380v	X 1.00	416v	X 1.00
400v	X 1.05	440v	X 1.07
415v	X 1.10	460v	X 1.12
		480v	X 1.16

The sustained current value is constant irrespective of voltage level

Note 2

The following multiplication factor should be used to convert the values calculated in accordance with NOTE 1 to those applicable to the various types of short circuit :

	3-phase	2-phase L-L	1-phase L-N
Instantaneous	x 1.00	x 0.87	x 1.30
Minimum	x 1.00	x 1.80	x 3.20
Sustained	x 1.00	x 1.50	x 2.50
Max. sustained duration	10 sec.	5 sec.	2 sec.

All other times are unchanged

Note 3

Curves are drawn for Star (Wye) connected machines. For other connection the following multipliers should be applied to current values as shown :

Parallel Star = Curve current value X 2

Series Delta = Curve current value X 1.732

REGULAR SESSION CITY COUNCIL MEETING PACKET FOR THE MEETING TO BE HELD ON SEPTEMBER 20, 2021

UCDI274J

STAMFORD

Winding 311

Locked Rotor Motor Starting Curve

50 Hz

MX

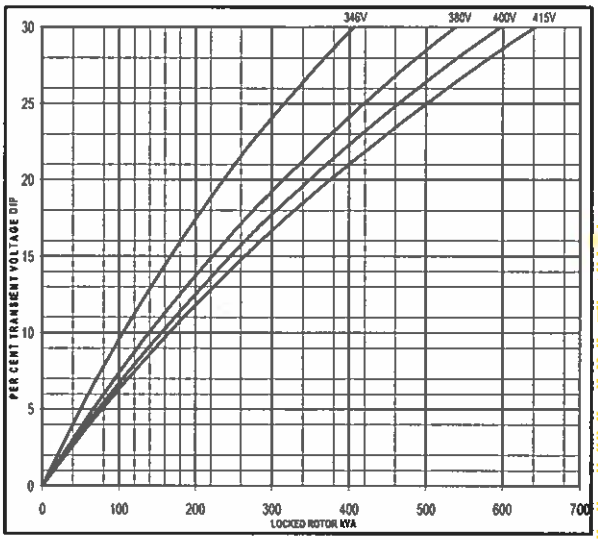

SX

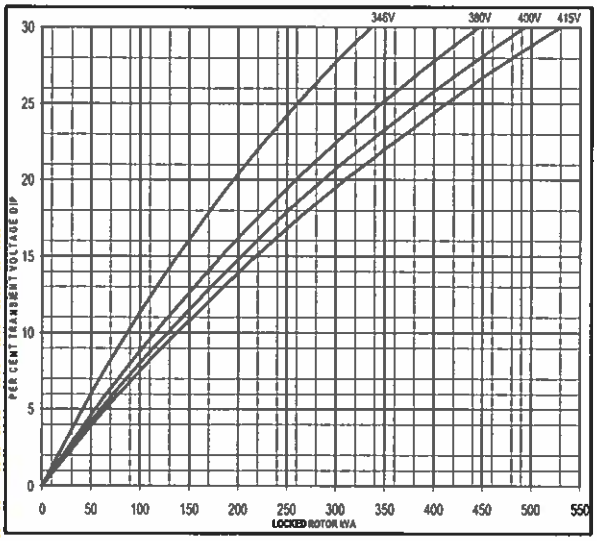

60 Hz

MX

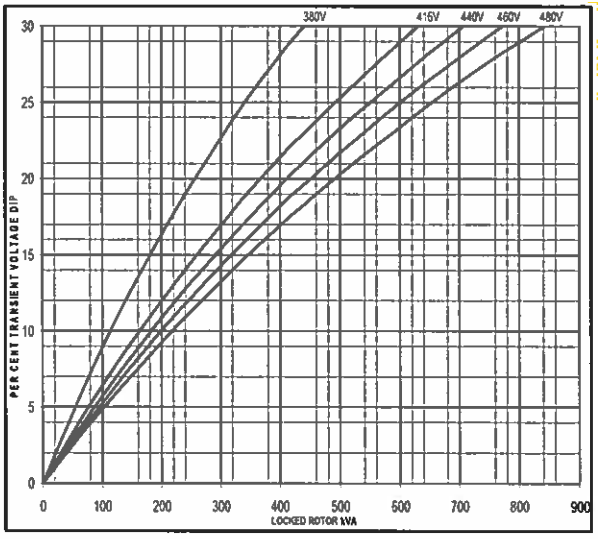

SX

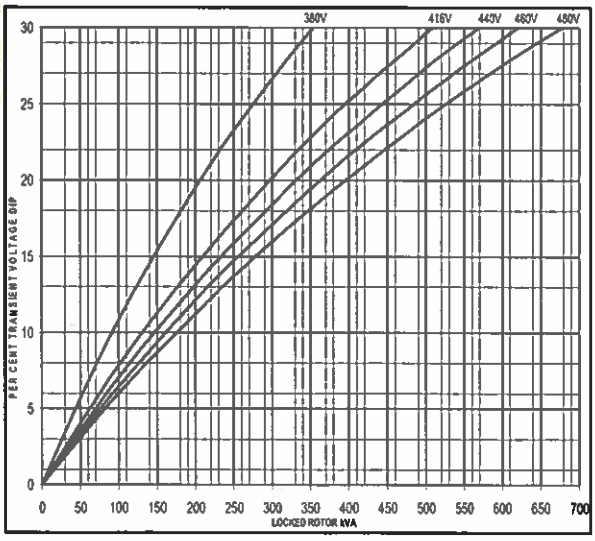

REGULAR SESSION CITY COUNCIL MEETING PACKET FOR THE MEETING TO BE HELD ON SEPTEMBER 20, 2021

60 Hz

UCDI274J

Winding 311

STAMFORD

THREE PHASE EFFICIENCY CURVES

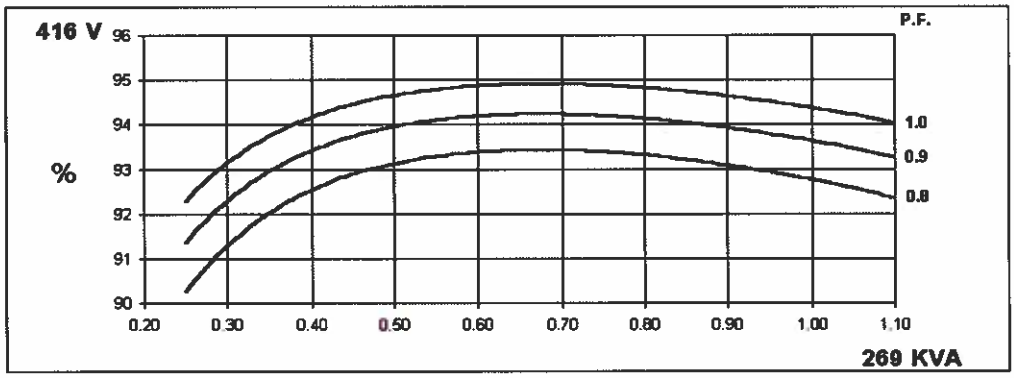

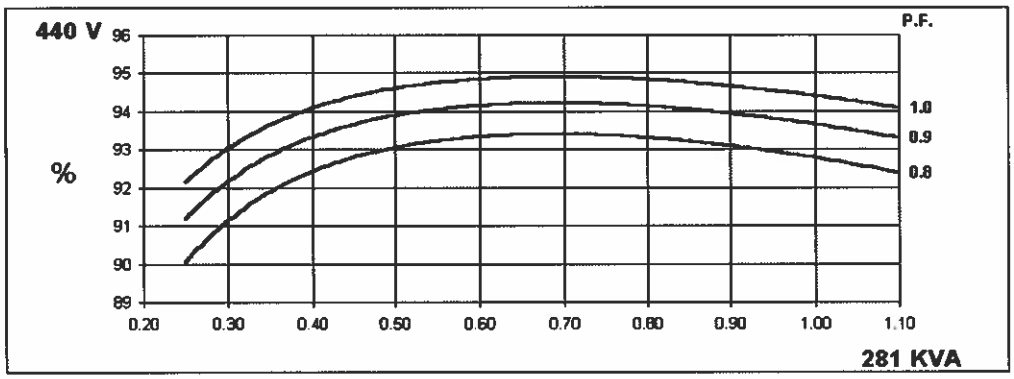

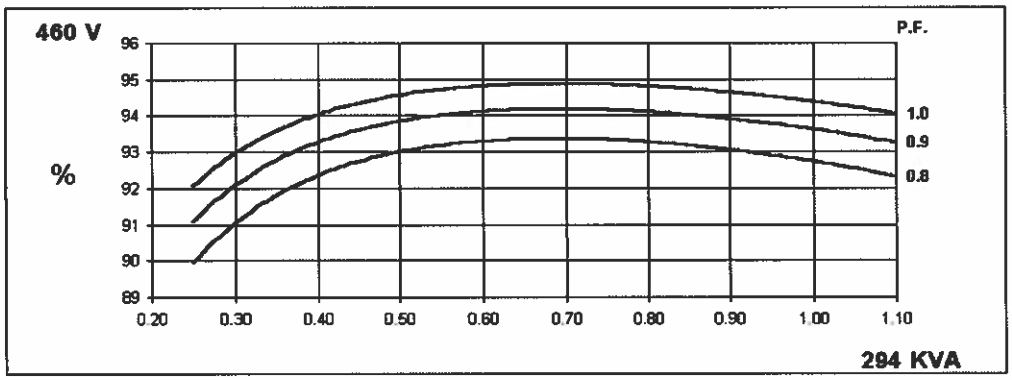

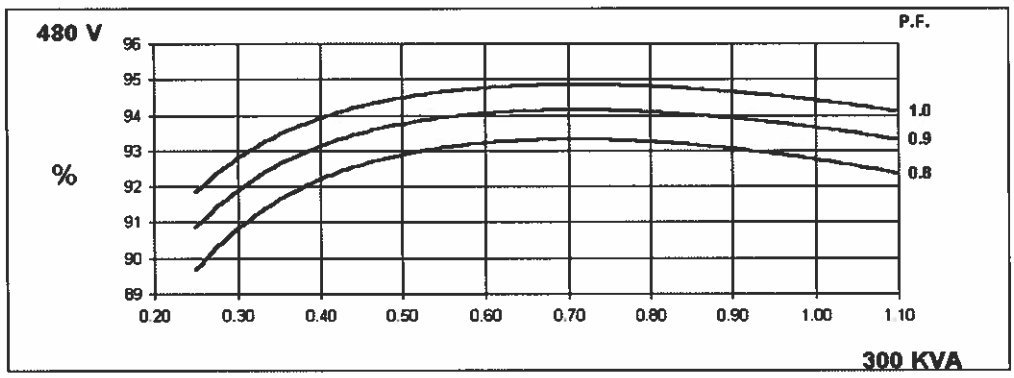

REGULAR SESSION CITY COUNCIL MEETING PACKET FOR THE MEETING TO BE HELD ON SEPTEMBER 20, 2021

50 Hz

UCDI274J

Winding 311

STAMFORD

THREE PHASE EFFICIENCY CURVES

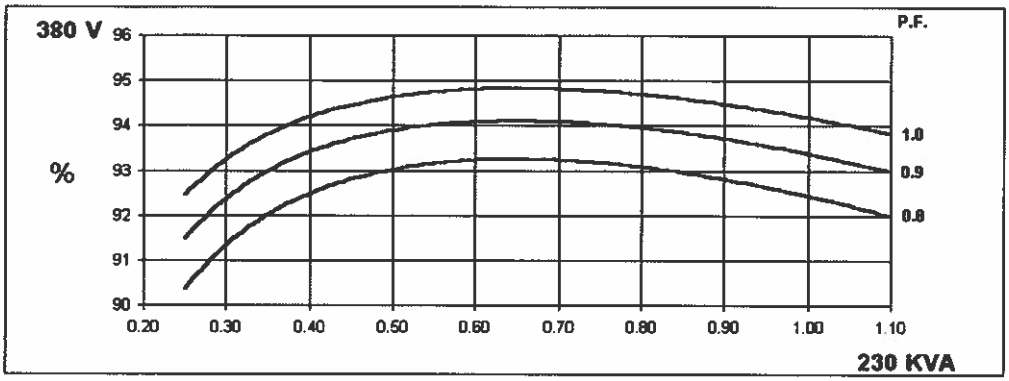

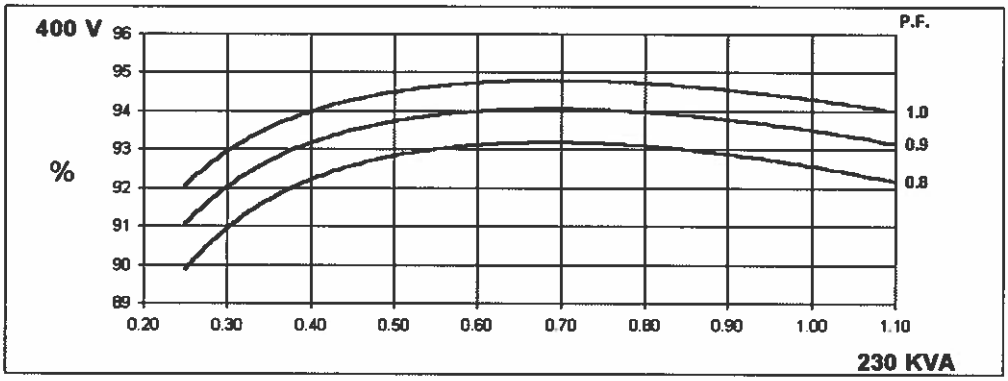

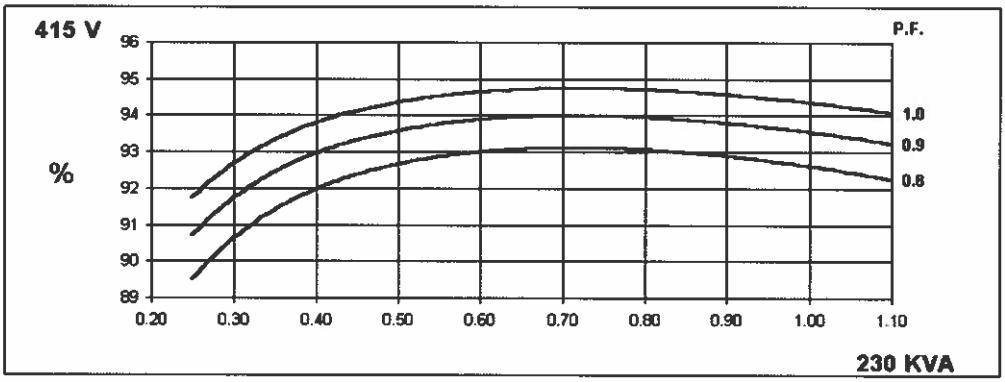

REGULAR SESSION CITY COUNCIL MEETING PACKET FOR THE MEETING TO BE HELD ON SEPTEMBER 20, 2021

UCDI274J

STAMFORD

WINDING 311

CONTROL SYSTEM SER.3	SEPARATELY EXCITED BY P.M.G.		
A.V.R.	MX321	MX341	
VOLTAGE REGULATION	± 0.5 %	± 1.0 %	With 4% ENGINE GOVERNING
SUSTAINED SHORT CIRCUIT	REFER TO SHORT CIRCUIT DECREMENT CURVES (page 7)		

CONTROL SYSTEM SER.4	SELF EXCITED		
A.V.R.	SX460	AS440	
VOLTAGE REGULATION	± 1.0 %	± 1.0 %	With 4% ENGINE GOVERNING
SUSTAINED SHORT CIRCUIT	SERIES 4 CONTROL DOES NOT SUSTAIN A SHORT CIRCUIT CURRENT		

INSULATION SYSTEM	CLASS H							
PROTECTION	IP23							
RATED POWER FACTOR	0.8							
STATOR WINDING	DOUBLE LAYER CONCENTRIC							
WINDING PITCH	TWO THIRDS							
WINDING LEADS	12							
STATOR WDG. RESISTANCE	0.0126 Ohms PER PHASE AT 22°C SERIES STAR CONNECTED							
ROTOR WDG. RESISTANCE	2.08 Ohms at 22°C							
EXCITER STATOR RESISTANCE	20 Ohms at 22°C							
EXCITER ROTOR RESISTANCE	0.091 Ohms PER PHASE AT 22°C							
R.F.I. SUPPRESSION	BS EN 61000-6-2 & BS EN 61000-6-4,VDE 0875G, VDE 0875N. refer to factory for others							
WAVEFORM DISTORTION	NO LOAD < 1.5% NON-DISTORTING BALANCED LINEAR LOAD < 5.0%							
MAXIMUM OVERSPEED	2250 Rev/Min							
BEARING NON-DRIVE END	BALL. 6310-2RS (ISO)							
WEIGHT COMP. GENERATOR	727 kg							
WEIGHT WOUND STATOR	304 kg							
WEIGHT WOUND ROTOR	271.9 kg							
WR² INERTIA	2.3744 kgm²							
SHIPPING WEIGHTS in a crate	740 kg							
PACKING CRATE SIZE	123 x 67 x 103 (cm)							
	50 Hz				60 Hz			
TELEPHONE INTERFERENCE	THF<2%				TIF<50			
COOLING AIR	0.58 m³/sec 1230 cfm				0.69 m³/sec 1463 cfm			
VOLTAGE SERIES STAR	380/220	400/231	415/240	440/254	416/240	440/254	460/266	480/277
VOLTAGE PARALLEL STAR	190/110	200/115	208/120	220/127	208/120	220/127	230/133	240/138
VOLTAGE SERIES DELTA	220/110	230/115	240/120	254/127	240/120	254/127	266/133	277/138
kVA BASE RATING FOR REACTANCE VALUES	230	230	230	N/A	269	281	294	300
Xd DIR. AXIS SYNCHRONOUS	1.939	1.750	1.626	-	2.651	2.475	2.370	2.221
X'd DIR. AXIS TRANSIENT	0.103	0.093	0.086	-	0.164	0.153	0.147	0.137
X"d DIR. AXIS SUBTRANSIENT	0.070	0.064	0.059	-	0.096	0.090	0.086	0.080
Xq QUAD. AXIS REACTANCE	0.886	0.800	0.743	-	1.206	1.126	1.078	1.010
X"q QUAD. AXIS SUBTRANSIENT	0.163	0.147	0.137	-	0.138	0.129	0.123	0.116
X_L LEAKAGE REACTANCE	0.062	0.056	0.052	-	0.081	0.076	0.072	0.068
X_2 NEGATIVE SEQUENCE	0.117	0.105	0.098	-	0.117	0.109	0.105	0.098
X_0 ZERO SEQUENCE	0.044	0.040	0.037	-	0.048	0.045	0.043	0.040
REACTANCES ARE SATURATED	VALUES ARE PER UNIT AT RATING AND VOLTAGE INDICATED							
T'd TRANSIENT TIME CONST.	0.045 s							
T"d SUB-TRANSTIME CONST.	0.015 s							
T'do O.C. FIELD TIME CONST.	1.27 s							
Ta ARMATURE TIME CONST.	0.03 s							
SHORT CIRCUIT RATIO	1/Xd							

PREVIEW DOCUMENT

REGULAR SESSION CITY COUNCIL MEETING PACKET FOR THE MEETING TO BE HELD ON SEPTEMBER 20, 2021

SPECIFICATIONS & OPTIONS

STANDARDS

Stamford industrial generators meet the requirements of BS EN 60034 and the relevant section of other international standards such as BS5000, VDE 0530, NEMA MG1-32, IEC34, CSA C22.2-100, AS1359.
Other standards and certifications can be considered on request.

VOLTAGE REGULATORS

SX460 AVR - STANDARD

With this self excited control system the main stator supplies power via the Automatic Voltage Regulator (AVR) to the exciter stator. The high efficiency semiconductors of the AVR ensure positive build-up from initial low levels of residual voltage.
The exciter rotor output is fed to the main rotor through a three phase full wave bridge rectifier. This rectifier is protected by a surge suppressor against surges caused, for example, by short circuit.

AS440 AVR

With this self-excited system the main stator provides power via the AVR to the exciter stator. The high efficiency semi-conductors of the AVR ensure positive build-up from initial low levels of residual voltage.
The exciter rotor output is fed to the main rotor through a three-phase full-wave bridge rectifier. The rectifier is protected by a surge suppressor against surges caused, for example, by short circuit or out-of-phase paralleling.
The AS440 will support a range of electronic accessories, including a 'droop' Current Transformer (CT) to permit parallel operation with other ac generators.

MX341 AVR

This sophisticated AVR is incorporated into the Stamford Permanent Magnet Generator (PMG) control system.
The PMG provides power via the AVR to the main exciter, giving a source of constant excitation power independent of generator output. The main exciter output is then fed to the main rotor, through a full wave bridge, protected by a surge suppressor. The AVR has in-built protection against sustained over-excitation, caused by internal or external faults. This de-excites the machine after a minimum of 5 seconds.
An engine relief load acceptance feature can enable full load to be applied to the generator in a single step.
If three-phase sensing is required with the PMG system the MX321 AVR must be used.
We recommend three-phase sensing for applications with greatly unbalanced or highly non-linear loads.

MX321 AVR

The most sophisticated of all our AVRs combines all the features of the MX341 with, additionally, three-phase rms sensing, for improved regulation and performance.
Over voltage protection is built-in and short circuit current level adjustments is an optional facility.

WINDINGS & ELECTRICAL PERFORMANCE

All generator stators are wound to 2/3 pitch. This eliminates triplen (3rd, 9th, 15th ...) harmonics on the voltage waveform and is found to be the optimum design for trouble-free supply of non-linear loads. The 2/3 pitch design avoids excessive neutral currents sometimes seen with higher winding pitches, when in parallel with the mains. A fully connected damper winding reduces oscillations during paralleling. This winding, with the 2/3 pitch and carefully selected pole and tooth designs, ensures very low waveform distortion.

TERMINALS & TERMINAL BOX

Standard generators are 3-phase reconnectable with 12 ends brought out to the terminals, which are mounted on a cover at the non-drive end of the generator. A sheet steel terminal box contains the AVR and provides ample space for the customers' wiring and gland arrangements. It has removable panels for easy access.

SHAFT & KEYS

All generator rotors are dynamically balanced to better than BS6861:Part 1 Grade 2.5 for minimum vibration in operation.

INSULATION/IMPREGNATION

The insulation system is class 'H'.
All wound components are impregnated with materials and processes designed specifically to provide the high build required for static windings and the high mechanical strength required for rotating components.

QUALITY ASSURANCE

Generators are manufactured using production procedures having a quality assurance level to BS EN ISO 9001.

The stated voltage regulation may not be maintained in the presence of certain radio transmitted signals. Any change in performance will fall within the limits of Criteria 'B' of EN 61000-6-2:2001. At no time will the steady-state voltage regulation exceed 2%.

DE RATES

All values tabulated on page 8 are subject to the following reductions

5% when air inlet filters are fitted.
3% for every 500 metres by which the operating altitude exceeds 1000 metres above mean sea level.
3% for every 5°C by which the operational ambient temperature exceeds 40°C.
Note: Requirement for operating in an ambient exceeding 60°C must be referred to the factory.

NB Continuous development of our products entitles us to change specification details without notice, therefore they must not be regarded as binding.

Front cover drawing typical of product range.

APPROVED DOCUMENT

REGULAR SESSION CITY COUNCIL MEETING PACKET FOR THE MEETING TO BE HELD ON SEPTEMBER 20, 2021

STAMFORD®

UCDI274J - Winding 311

Technical Data Sheet

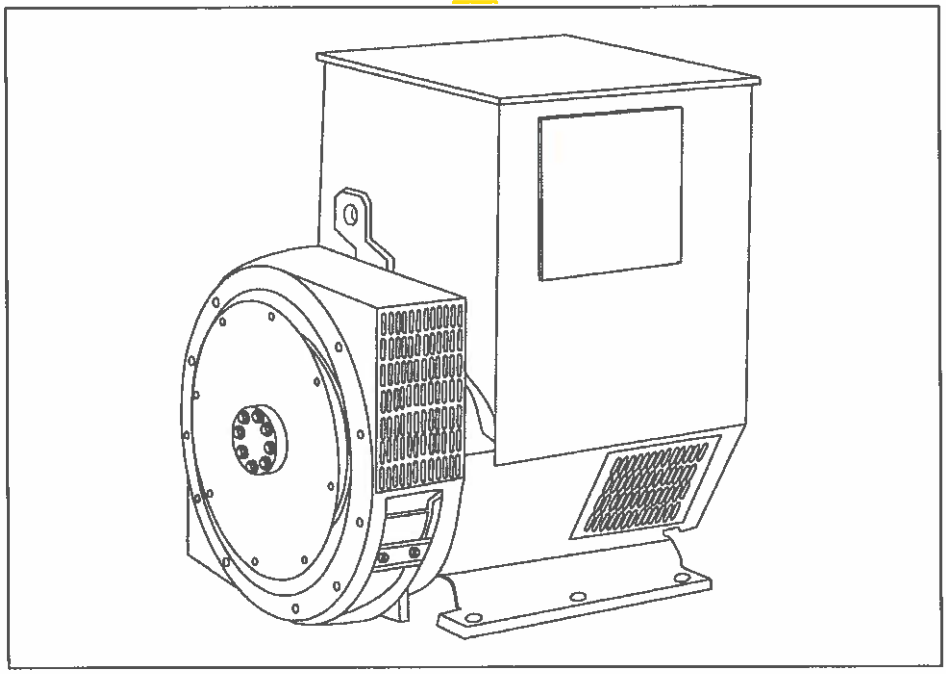

REGULAR SESSION CITY COUNCIL MEETING PACKET FOR THE MEETING TO BE HELD ON SEPTEMBER 20, 2021

Engine Installation Criteria

General Data

Model	6068HF485
Number of Cylinders	6
Bore and Stroke--in. (mm)	4.19 x 5.00 (106 x 127)
Displacement--in.^{3} (L)	415 (6.8)
Compression Ratio	17.0:1
Valves per Cylinder--Intake/Exhaust	2 / 2
Firing Order	1-5-3-6-2-4
Combustion System	Unit Injection
Engine Type	In-line, 4-Cycle
Aspiration	Turbocharged
Charge Air Cooling System	Air-to-Air
Engine Crankcase Vent System	Open

Physical Data

Length--in. (mm)	45.7* (1161*)
Width--in. (mm)	24.3* (616*)
Height--in. (mm)	44.4* (1128*)
Weight, with oil--lb (kg)	1495 (678)
(Includes flywheel hsg., flywheel & electrics)	
Center of Gravity Location	
From Rear Face of Block (X-axis)--in. (mm)	15.5 (394)
Right of Crankshaft (Y-axis)--in. (mm)	-0.1 (-2.24)
Above Crankshaft (Z-axis)--in. (mm)	7.4 (189)
Max. Allow. Static Bending Moment at Rear Face of Flywhl Hsg w/ 5-G Load--lb-ft (N•m)	600 (814)

Thrust Bearing Load Limit --lb (N)	Forward	Rearward
Intermittent	899 (4000)	450 (2000)
Continuous	495 (2200)	225 (1000)

Max. Front of Crank. Torsional Vibration--DDA	0.25
Max. Continuous Damper Temp--°F (°C)	180 (82)

Electrical System	12 Volt	24 Volt
Min. Battery Capacity (CCA)--amp	800	570
Max. Allow. Start. Circ't Resist.--Ohm	0.0012	0.002
Starter Rolling Current:		
At 32 °F (0 °C)--amp	920	600
At -22 °F (-30 °C)--amp	1300	700
Min. Volts at ECU while Cranking--volts	6	10
Max. ECU Temperature--°F (°C)	221 (105)	
Max. VTG Actuator Surface Temp.--°F (°C)	356 (180)	
Max. Harness Temperature--°F (°C)	248 (120)	
Maximum Voltage From Engine Crankshaft/ Generator Shaft to Ground--VAC	0.15	0.15

Air System	Prime	Standby
Max. Allowable Temp Rise--Ambient Air to Engine Inlet--°F (°C)	15 (8)	15 (8)
Maximum Air Intake Restriction		
Dirty Air Cleaner--in.H_2O (kPa)	25 (6.25)	25 (6.25)
Clean Air Cleaner--in.H_2O (kPa)	15 (3.75)	15 (3.75)
Engine Air Flow--ft^3/min (m^3/min)	520 (14.7)	619 (17.5)
Air Cleaner Efficiency--%	99.9	

Charge Air Cooling System	Prime	Standby
Air/Air Exchanger Heat Rejection--BTU/min (kW)	2298(40.37)	3264(57.34)
Compress. Dischrg. Temp.(Rated) @ 77 °F (25°C) Amb. Air--°F (°C)	365(185)	441(227)
Compress. Dischrg. Temp.(Max.) @ 47°C amb. and 80 kPa bar.--°F (°C)	000(000)	000(000)
Press. Drop, thru CAC--in.H_2O (kPa)		
Max.	64 (16)	64 (16)
Min.	32 (8)	32 (8)
Intake Manifold Pressure--psi (kPa)	27 (188)	37 (252)
CAC Out Temp @ 77°F (25°C) Amb.--°F (°C)		
Max.	126 (52)	126 (52)
Min.	109 (43)	109 (43)
CAC Out Temp @ any Ambient--°F (°C)		
Max.	190 (88)	190 (88)

Cooling System	Prime	Standby
Engine Heat Reject.--BTU/min (kW)	4766(83.7)	5404(94.9)
Coolant Flow--gal/min (L/min)	70 (265)	70 (265)
Thermostat Start to Open--°F (°C)	180 (82)	180 (82)
Thermostat Fully Open--°F (°C)	203 (95)	203 (95)
Engine Coolant Capacity--qt (L)	13 (11.9)	13 (11.9)
Min. Pressure Cap--psi (kPa)	14.5 (100)	14.5 (100)
Max. Top Tank Temp--°F (°C)	230 (110)	230 (110)
Min. Coolant Fill Rate--gal/min (L/min)	3 (11)	3 (11)
Min. Air-to-Boil Temperature--°F (°C)	117 (47)	117 (47)
Min. Pump Inlet Pressure--psi (kPa)	4.4 (30)	4.4 (30)

Exhaust System	Prime	Standby
Exhaust Flow--ft^3/min (m^3/min)	1371 (38.8)	1514 (42.9)
Exhaust Temperature--°F (°C)	982 (528)	905 (485)
Max. Exhaust Restriction----in. H_2O (kPa)	40 (10)	
Min. Exhaust Restriction----in. H_2O (kPa)	16 (4)	
Max. Bend. Moment, Turbo Out.--lb-ft (N•m)	5.2 (7.0)	
Max. Shear on Turbo Outlet--lb (kg)	24 (11)	

Fuel System	Prime	Standby
ECU Description	L14 Controller	
Fuel System Description	HPCR	
Fuel Injection Pump	Denso HP3	
Governor Type	Electronic	
Total Fuel Flow--lb/hr (kg/hr)	161 (73.1)	174 (78.7)
Fuel Consumption--lb/hr (kg/hr)	97 (44)	110 (50)
Max. Fuel Inlet Temp.--°F (°C)	176 (80)	
Fuel Temp. Rise, Inlt to Retrn--°F (°C)	97.2(54)	100.8(56)
Max. Fuel Inlet Restriction--in. H_2O (kPa)	80 (20)	
Max. Fuel Inlet Pressure--in. H_2O (kPa)	NA (NA)	
Max. Fuel Return Pressure--in. H_2O (kPa)	80 (20)	

Lubrication System	Prime	Standby
Oil Press. at Rated Speed--psi (kPa)	49 (339)	49 (339)
Oil Pressure at Low Idle--psi (kPa)	15 (105)	
Max. Oil Carryover in Blow-by--lb/hr (g/hr)	0.002 (1.0)	
Max. Airflow in Blow-by--gal/min (l/min)	34 (130)	
Max. Crankcase Pressure--in. H_2O (kPa)	2 (0.5)	

Performance Data	Prime	Standby
Rated Power--hp (kW)	286 (214)	315 (235)
Rated Speed--rpm	1800	1800
Low Idle Speed--rpm	1150	1150
Rated Torque--lb-ft (N•m)	1536 (1133)	1690 (1247)
BMEP--psi (kPa)	304 (2094)	334 (2304)
Friction Power @ Rated Speed--hp (kW)	25 (18.7)	25 (18.7)
Altitude Capability--ft (m)	10,000 (3000)	
Ratio--Air : Fuel	23.0 : 1	24.0 : 1
Smoke @ Rated Speed--Bosch No.	0.45	0.77
Noise--dB(A) @ 1 m	89.0*	89.0*

Fuel Consumption -- lb/hr (kg/h)	Prime	Standby
25 % Power	27.8 (12.6)	30.3 (13.7)
50 % Power	51.4 (23.3)	56.2 (25.5)
75 % Power	73.2 (33.2)	80.4 (36.5)
100 % Power	97.2 (44.1)	109.7 (49.8)

All values at rated speed and power with standard options unless otherwise noted.

* Revised Data

Curve 6068HF4851800315 ..... Sheet 2 of 2

June 2007

REGULAR SESSION CITY COUNCIL MEETING PACKET FOR THE MEETING TO BE HELD ON SEPTEMBER 20, 2021

JOHN DEERE

ENGINE PERFORMANCE CURVE

PowerTech Plus™ 6.8L Engine
Model: 6068HF485

Rating: Gross Power
Application: Generator (60 Hz)
Target: 200 kWe Standby Market

286 hp (214 kW) Prime
315 hp (235 kW) Standby

[See Option Code Tables]

Nominal Engine Power @ 1800 RPM			
Prime		Standby	
HP	kW	HP	kW
286	214	315	235

Generator Efficiency %	Fan Power (6% of Standby)		Power Factor	Prime Rating [2]		Standby Rating [1,2]		4 sec Standby Block Load Capability
	hp	kW		kWe	kVA	kWe	kVA	
88-92	18.9	14.1	0.8	176-184	220-230	194-203	243-254	80%

Note 1: Based on nominal engine power. Derate 20% for 100% block load capability.
Note 2: kWe / kVA rating assumes 90% efficiency. "Generator Efficiency %" will vary.

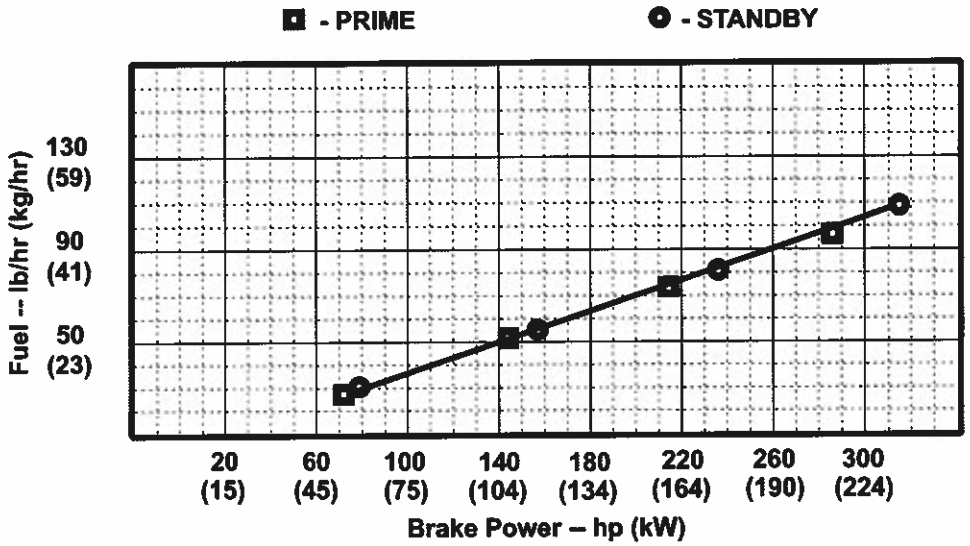

STANDARD CONDITIONS

Air Intake Restriction ..... 12 in.H_2O (3 kPa)
Exhaust Back Pressure ..... 30 in.H_2O (7.5 kPa)

Gross power guaranteed within + or - 5% at SAE J1995 and ISO 3046 conditions:
- 77 °F (25 °C) air inlet temperature
- 29.31 in.Hg (99 kPa) barometer
- 104 °F (40 °C) fuel inlet temperature
- 0.853 fuel specific gravity @ 60 °F (15.5 °C)

Conversion factors:
- Power: kW = hp x 0.746
- Fuel: 1 gal = 7.1 lb, 1 L = 0.85 kg
- Torque: N•m = lb-ft x 1.356

All values are from currently available data and are subject to change without notice.

Notes:
All OEM Gen Set Engine Applications must be pre-screened for torsional vibration compatibility with the respective alternator end hardware.

OEM Engine Application Engineering will perform this computer-based analysis work upon request.

Tier-3 Emission Certifications:	Certified by:
CARB; EPA Ref: Engine Emission Label	22 June '07

* Revised Data
Curve 6068HF4851800315 ..... Sheet 1 of 2
June 2007

REGULAR SESSION CITY COUNCIL MEETING PACKET FOR THE MEETING TO BE HELD ON SEPTEMBER 20, 2021

Molded Case Circuit Breakers

Power Defense ™ UL Global Series

Part Number: PDG33G0400B2NJNNNNNN

Powering Business Worldwide

Datasheet creation date: 02/12/2019

General Technical Data

Frame Rating (In)	400A
Reference Standard	UL489, CSA 22.2, IEC 60947-2 & GB
Number of poles	3
Neutral rating	-
Interruption Rating Designator	F / G / K / M / N / P
UL Interruption Rating to UL 489 (240Vac)	35 / 65 / 85 / 100 / 150 / 200kA
UL Interruption Rating to UL 489 (480Vac)	25 / 35 / 50 / 65(a) / 85 / 100kA
UL Interruption Rating to UL 489 (600Vac)	14 / 18 / 25 / 35 / 50 / 65kA
UL Interruption Rating to UL 489 (125/250Vdc)	
UL Current Limiting	N / N / N / Y / Y / Y
Rated breaking capacity to IEC 60947-2 (220-240 Vac Icu)	35 / 55 / 85 / 100 / 150 / 200kA
Rated breaking capacity to IEC 60947-2 (220-240 Vac Ics)	35 / 55 / 85 / 100 / 100 / 150kA
Rated breaking capacity to IEC 60947-2 (380-415 Vac Icu)	25 / 36 / 50 / 70 / 70 / 100kA
Rated breaking capacity to IEC 60947-2 (380-415 Vac Ics)	25 / 36 / 50 / 53 / 70 / 70kA
Rated breaking capacity to IEC 60947-2 (440 Vac Icu)	25 / 30 / 35 / 50 / 70 / 100kA
Rated breaking capacity to IEC 60947-2 (440 Vac Ics)	20 / 22.5 / 35 / 40 / 50 / 50kA
Rated breaking capacity to IEC 60947-2 (525 Vac Icu)	18 / 20 / 25 / 30 / 35 / 40kA
Rated breaking capacity to IEC 60947-2 (525 Vac Ics)	5 / 7.5 / 10 / 15 / 25 / 25kA
Rated breaking capacity to IEC 60947-2 (690 Vac Icu)	- / 8 / 10 / 15 / 20 / 20kA
Rated breaking capacity to IEC 60947-2 (690 Vac Ics)	- / 4 / 5 /7. 5 / 10 / 10kA
Rated breaking capacity to IEC 60947-2 (125V DC Icu)	
Rated breaking capacity to IEC 60947-2 (250V DC 2P In series Ics)	10 / 10 / 10 / 22 / 22 / 22kA
Frequency	50/60Hz
Trip Unit Type	PXR10
Continuous Current Range	160 - 400A
100% UL489 Rated	Yes
Instantaneous/Short Circuit Range	2 - 10 In
Magnetic/Instantaneous Override	4400A
Dimensions H x W x D (inches)	10.125 x 5.47 x 4.297
Pole to pole distance inches	1,719
Approx Weight lbs	16
RoHS Compliance	Yes
UL File Number	E7819
Ambient Temp Calibration	
Derating at 50C	
Derating at 60C	
Derating at 70C	

1. 480Vac corresponds to 277Vac for 1P
2. 600Vac corresponds to 347Vac for 1P

REGULAR SESSION CITY COUNCIL MEETING PACKET FOR THE MEETING TO BE HELD ON SEPTEMBER 20, 2021

Molded Case Circuit Breakers

Power Defense ™ UL Global Series

Part Number: PDG43G0800B2NJNNNNNN

Powering Business Worldwide

Datasheet creation date: 20/11/2019

PRODUCT VIEW *(Use Mouse to Rotate and Zoom)*

Eaton's Power Defense™ molded case circuit breakers, a globally rated platform designed to help keep your power system safe with latest protection technology. Engineered for the future: IoT and Industry 4.0 features such as built-in communications, advanced energy metering, and algorithms that signal breaker maintenance; zone selective interlock technology that clears faults quickly and locally; ArcFlash reduction options that help protect your people, and not to mention Eaton's best-inclass support and service.

Tech Data for Configured Product

Power Defense Catalog Number	PDG43G0800B2NJNNNNNN
Frame Size	Frame 4
Poles	3 Pole
Voltage	240V AC
Interruption or Breaking Capacity (Icu/Ics)	55kA
Continuous Current Rating (In)	800A
Trip Unit Type	PXR10
Trip Unit Options 1	LSI
Trip Unit Options 2	None
Indicating Accessories	None
Indicating Accessories Terminal	None
Tripping Accessories	None
Tripping Accessory Terminal	None
Tripping Accessory Voltage	None
Line Type Description	Option 1 - Standard Terminal
Line Conductor Options	(3) 3/0 - 400
Line Terminal Type	Aluminum
Load Type Description	Option 1 - Standard Terminal
Load Conductor Options	(3) 3/0 - 400
Load Terminal Type	Aluminum
Special Options - Type of Modification	None
Details	None
Additional Description	None

REGULAR SESSION CITY COUNCIL MEETING PACKET FOR THE MEETING TO BE HELD ON SEPTEMBER 20, 2021

Molded Case Circuit Breakers

Power Defense ™ UL Global Series

Part Number: PDG43G0800B2NJNNNNNN

Powering Business Worldwide

Datasheet creation date: 20/11/2019

Technical drawings

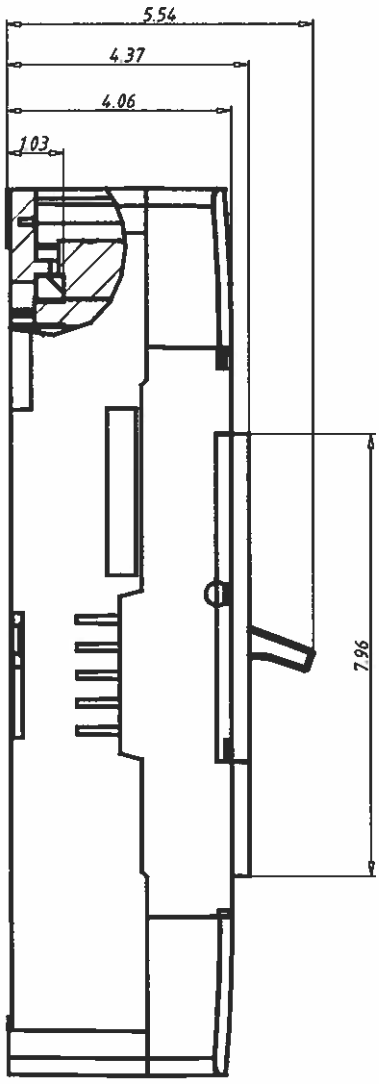

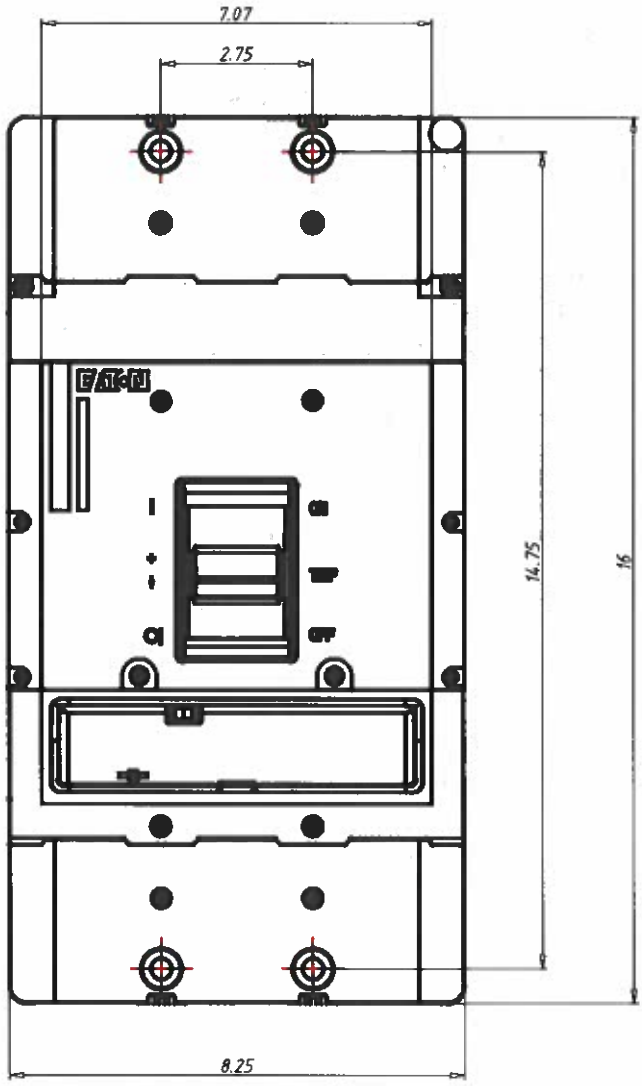

REGULAR SESSION CITY COUNCIL MEETING PACKET FOR THE MEETING TO BE HELD ON SEPTEMBER 20, 2021

Molded Case Circuit Breakers

Power Defense ™ UL Global Series

Part Number: PDG43G0800B2NJNNNNNN

Powering Business Worldwide

Datasheet creation date: 20/11/2019

General Technical Data

Frame Rating (In)	800A
Reference Standard	UL489, CSA 22.2, IEC 60947-2 & GB
Number of poles	3
Neutral rating	-
Interruption Rating Designator	G / K / M
UL Interruption Rating to UL 489 (240Vac)	65 / 85 / 100kA
UL Interruption Rating to UL 489 (480Vac)	35 / 50 / 65(a)kA
UL Interruption Rating to UL 489 (600Vac)	18 / 25 / 35kA
UL Interruption Rating to UL 489 (125/250Vdc)	
UL Current Limiting	-
Rated breaking capacity to IEC 60947-2 (220-240 Vac Icu)	55 / 85 / 100 / 100kA
Rated breaking capacity to IEC 60947-2 (220-240 Vac Ics)	55 / 85 / 100 / 100kA
Rated breaking capacity to IEC 60947-2 (380-415 Vac Icu)	36 / 50 / 70 / 70kA
Rated breaking capacity to IEC 60947-2 (380-415 Vac Ics)	36 / 50 / 53 / 70kA
Rated breaking capacity to IEC 60947-2 (440 Vac Icu)	30 / 35 / 50 / 65kA
Rated breaking capacity to IEC 60947-2 (440 Vac Ics)	22.5 / 35 / 40 / 50kA
Rated breaking capacity to IEC 60947-2 (525 Vac Icu)	20 / 25 / 30 / 35kA
Rated breaking capacity to IEC 60947-2 (525 Vac Ics)	16.5 / 20 / 25 / 25kA
Rated breaking capacity to IEC 60947-2 (690 Vac Icu)	8 / 10 / 15 / 20kA
Rated breaking capacity to IEC 60947-2 (690 Vac Ics)	4 / 5 /7. 5 / 10kA
Rated breaking capacity to IEC 60947-2 (125V DC Icu)	
Rated breaking capacity to IEC 60947-2 (250V DC 2P in series Ics)	22 / 22 / 25kA
Frequency	50/60Hz
Trip Unit Type	PXR10
Continuous Current Range	320 - 800A
100% UL489 Rated	Yes
Instantaneous/Short Circuit Range	2 - 8 In
Magnetic/Instantaneous Override	6800A
Dimensions H x W x D (inches)	16 x 8.25 x 4.38
Pole to pole distance inches	2,75
Approx Weight lbs	29,98
RoHS Compliance	Yes
UL File Number	E7819
Ambient Temp Calibration	
Derating at 50C	
Derating at 60C	
Derating at 70C	

1. 480Vac corresponds to 277Vac for 1P
2. 600Vac corresponds to 347Vac for 1P

REGULAR SESSION CITY COUNCIL MEETING PACKET FOR THE MEETING TO BE HELD ON SEPTEMBER 20, 2021

Molded Case Circuit Breakers

Power Defense ™ UL Global Series

Part Number: PDG53K1200E3RNNNNNNN

Powering Business Worldwide

Datasheet creation date: 19/08/2019

PRODUCT VIEW *(Use Mouse to Rotate and Zoom)*

Eaton's Power Defense™ molded case circuit breakers, a globally rated platform designed to help keep your power system safe with latest protection technology. Engineered for the future: IoT and Industry 4.0 features such as built-in communications, advanced energy metering, and algorithms that signal breaker maintenance; zone selective interlock technology that clears faults quickly and locally; ArcFlash reduction options that help protect your people, and not to mention Eaton's best-inclass support and service.

Tech Data for Configured Product

Power Defense Catalog Number	PDG53K1200E3RNNNNNNN
Frame Size	Frame 5
Poles	3 Pole
Voltage	480V AC
Interruption or Breaking Capacity (Icu/Ics)	50kA
Continuous Current Rating (In)	1200A
Trip Unit Type	PXR20
Trip Unit Options 1	LSIG
Trip Unit Options 2	Relays
Indicating Accessories	None
Indicating Accessories Terminal	None
Tripping Accessories	None
Tripping Accessory Terminal	None
Tripping Accessory Voltage	None
Line Type Description	None
Line Conductor Options	N/A
Line Terminal Type	N/A
Load Type Description	None
Load Conductor Options	N/A
Load Terminal Type	N/A
Special Options - Type of Modification	None
Details	None
Additional Description	None

REGULAR SESSION CITY COUNCIL MEETING PACKET FOR THE MEETING TO BE HELD ON SEPTEMBER 20, 2021

Molded Case Circuit Breakers

Power Defense ™ UL Global Series

Part Number: PDG53K1200E3RNNNNNNN

Powering Business Worldwide

Datasheet creation date: 19/08/2019

Technical drawings

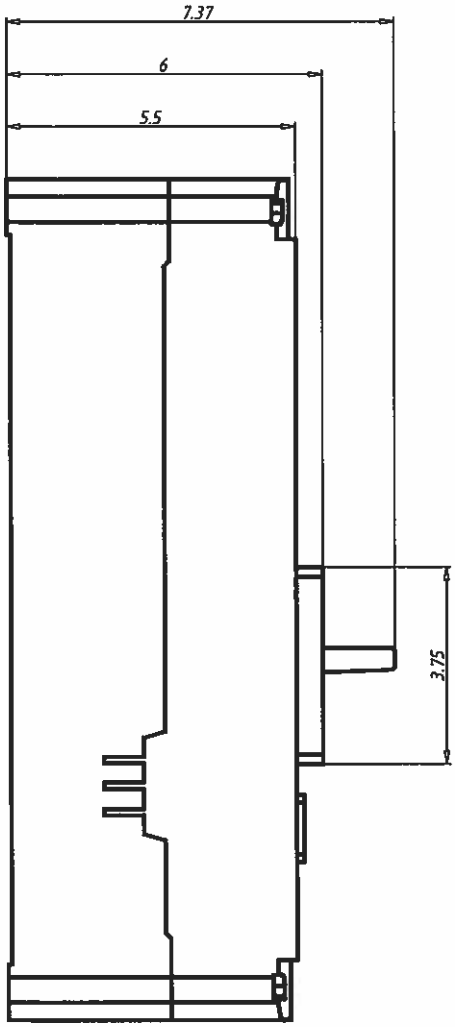

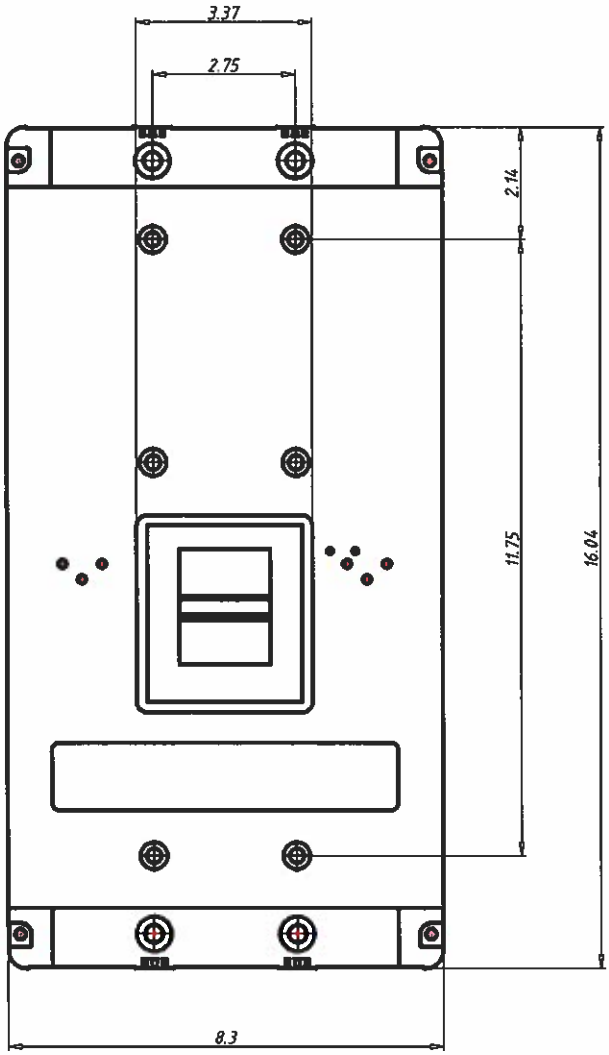

REGULAR SESSION CITY COUNCIL MEETING PACKET FOR THE MEETING TO BE HELD ON SEPTEMBER 20, 2021

Molded Case Circuit Breakers

Power Defense ™ UL Global Series

Part Number: PDG53K1200E3RNNNNNNN

Powering Business Worldwide

Datasheet creation date: 19/08/2019

General Technical Data

Frame Rating (In)	1200A
Reference Standard	UL489, CSA 22.2, IEC 60947-2 & GB
Number of poles	3
Neutral rating	-
Interruption Rating Designator	K / M / N / P / T
UL Interruption Rating to UL 489 (240Vac)	85 / 100 / 150 / 200 / 200kA
UL Interruption Rating to UL 489 (480Vac)	50 / 65 / 85 / 100 / 150kA
UL Interruption Rating to UL 489 (600Vac)	25 / 35 / 50 / 65 / 65kA
UL Interruption Rating to UL 489 (125/250Vdc)	
UL Current Limiting	-
Rated breaking capacity to IEC 60947-2 (220-240 Vac Icu)	85 / 100 / 150 / 200kA
Rated breaking capacity to IEC 60947-2 (220-240 Vac Ics)	85 / 100 / 100 / 150kA
Rated breaking capacity to IEC 60947-2 (380-415 Vac Icu)	50 / 70 / 70 / 100kA
Rated breaking capacity to IEC 60947-2 (380-415 Vac Ics)	50 / 50 /50 /50kA
Rated breaking capacity to IEC 60947-2 (440 Vac Icu)	35 / 50 / 70 / 100kA
Rated breaking capacity to IEC 60947-2 (440 Vac Ics)	35 / 40 / 50 / 50kA
Rated breaking capacity to IEC 60947-2 (525 Vac Icu)	25 / 30 / 35 / 40kA
Rated breaking capacity to IEC 60947-2 (525 Vac Ics)	20 /25 / 25 / 25kA
Rated breaking capacity to IEC 60947-2 (690 Vac Icu)	10 / 15 / 20 / 35kA
Rated breaking capacity to IEC 60947-2 (690 Vac Ics)	5 / 7.5 / 10 / 18kA
Rated breaking capacity to IEC 60947-2 (125V DC Icu)	
Rated breaking capacity to IEC 60947-2 (250V DC 2P in series Ics)	25
Frequency	50/60Hz
Trip Unit Type	PXR20
Continuous Current Range	500 - 1200A
100% UL489 Rated	Yes
Instantaneous/Short Circuit Range	2 - 10 In
Magnetic/Instantaneous Override	14400A
Dimensions H x W x D (inches)	16 x 8.25 x 5.5
Pole to pole distance inches	2,75
Approx Weight lbs	45
RoHS Compliance	Yes
UL File Number	E7819
Ambient Temp Calibration	
Derating at 50C	
Derating at 60C	
Derating at 70C	

1. 480Vac corresponds to 277Vac for 1P
2. 600Vac corresponds to 347Vac for 1P

REGULAR SESSION CITY COUNCIL MEETING PACKET FOR THE MEETING TO BE HELD ON SEPTEMBER 20, 2021



Guest chargers are proven performers in genset applications. For specific application information, or if you are developing a new product, be sure to consult with the Guest applications engineering team to ensure the correct charger is specified.

Genset Chargers

MODEL	TOTAL AMPS	OUT-PUTS	AMPS PER OUTPUT	BATTERY SYSTEM	INPUT VOLTAGE	AC	DC	DIMENSIONS	WT. (LBS)	AGENCY LISTING
2602A-12 2602A-12-B (bulk)	2	1	2	12V	100 - 130 50/60Hz	6' w/ Connect-Charge plug	4' w/ ring terminals	2.9" x 5.1" x 1.5"	2	UL
2605A-1-24RT-01 (bulk pack only) (1)	5	1	5	24V	100 - 130 50/60Hz	6' SJT 18-3 w/ Connect-Charge plug	6' SJT 18-3 w/ ring terminals	7.4" x 6.3" x 2.4"	4.5	UL
2608A-B-01 (bulk pack only) (1)	6	1	6	12V	100 - 130 50/60Hz	6' cable w/ molded plug rated -40 to 105C	4' w/ ring terminals rated -40 to 105C	3.5" x 6.4" x 2.3"	4	UL
2610A 2610A-B (bulk)	10	2	5/5	12V+12V	100 - 130 50/60Hz	Studs	Studs	5.5" x 7.8" x 2.4"	5.6	– UL (bulk only)

(1) 2-stage charging

c UL Individual agency listings as shown in product chart.

REGULAR SESSION CITY COUNCIL MEETING PACKET FOR THE MEETING TO BE HELD ON SEPTEMBER 20, 2021

Plastic Magna Seal Air Cleaners



Internal or External Evacuator Valve
High Strength Polymer
Working Temp –40c to +80c (-40F to 176F)
Design Compatibility with other Manufacturers
Industry Standard elements
Can be Mounted Vertical or Horizontal

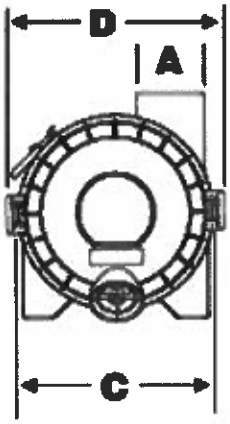

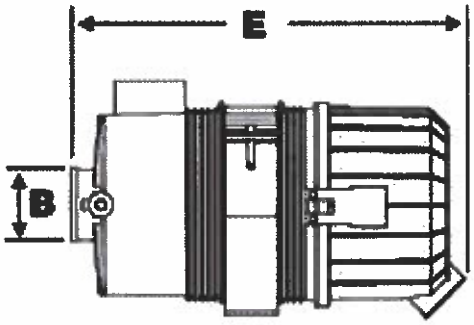

Type 1
Straight Outlet

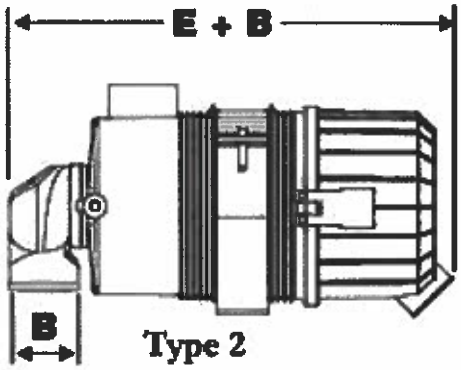

Type 2
90° Outlet

Air Cleaner Assembly																				
Model Number	Part Number	Type	Initial Restriction 6" H2O CFM	6" H2O M3m	8" H2O CFM	8" H2O M3m	10" H20 CFM	10" H20 M3m	A OD Inlet inch	A OD Inlet mm	B OD Outlet inch	B OD Outlet mm	C inch	C mm	D inch	D mm	E inch	E mm
2s-FW-E1	68110	1	75	2.1	90	2.5	105	3.0	2.00	51	1.75	45	4.8	122	6.14	156	8.98	228
2s-FW-E2	68111	1	65	1.8	75	2.1	85	2.4	2.00	51	1.75	45	4.80	122	6.14	156	8.98	228
2s-FW-E1-90	68103	2	63	1.7	73	2.0	82	2.3	2.00	51	1.75	45	4.80	122	6.14	156	10.43	265
2s-FW-E2-90	68107	2	53	1.5	63	1.8	71	2.0	2.00	51	1.75	45	4.80	122	6.14	156	10.43	265
2-FW-E1	68129	1	100	2.8	115	3.3	130	3.7	2.00	51	2.00	51	5.75	146	7.09	180	13.39	340
2-FW-E2	68130	1	90	2.5	105	3.0	115	3.3	2.00	51	2.00	51	5.75	146	7.09	180	13.39	340
2-FW-E1-90	68116	2	88	2.4	102	2.9	113	3.2	2.00	51	2.00	51	5.75	146	7.09	180	14.96	380
2-FW-E2-90	68127	2	77	2.2	92	2.6	103	2.9	2.00	51	2.00	51	5.75	146	7.09	180	14.96	380
2.5-FW-E1	68132	1	150	4.2	175	5.0	195	5.5	2.50	63.5	2.50	63.5	6.89	175	8.15	207	14.13	359
2.5-FW-E2	68133	1	145	4.1	165	4.7	185	5.2	2.50	63.5	2.50	63.5	6.89	175	8.15	207	14.13	359
2.5-FW-E1-90	68131	2	134	3.8	156	4.4	175	5.0	2.50	63.5	2.50	63.5	6.89	175	8.15	207	16.22	412
2.5-FW-E2-90	68134	2	127	3.6	148	4.2	168	4.7	2.50	63.5	2.50	63.5	6.89	175	8.15	207	16.22	412
3-FW-E1	68140	1	160	4.5	190	5.4	210	5.9	3.00	76	3.00	76	7.24	184	8.58	218	14.57	370
3-FW-E2	68150	1	150	4.2	170	4.8	190	5.4	3.00	76	3.00	76	7.24	184	8.58	218	14.57	370
3-FW-E1-90	68140-2	2	154	4.4	181	5.1	196	5.6	3.00	76	3.00	76	7.24	184	8.58	218	17.80	452
3-FW-E2-90	68150-2	2	138	4.0	162	4.6	182	5.2	3.00	76	3.00	76	7.24	184	8.58	218	17.80	452
3.75-FW-E1	68160	1	250	7.1	290	5.4	325	9.2	3.75	95	3.50	89	8.35	212	9.72	247	15.63	397
3.75-FW-E2	68170	1	225	6.4	260	7.4	280	7.9	3.75	95	3.50	89	8.35	212	9.72	247	15.63	397
3.75-FW-E1-90	68157	2	212	6.0	250	7.1	277	7.8	3.75	95	3.50	89	8.35	212	9.72	247	18.5	470
3.75-FW-E2-90	68167	2	188	5.3	220	6.2	250	7.1	3.75	95	3.50	89	8.35	212	9.72	247	18.5	470
4.5-FW-E1	68175	1	375	10.6	425	12.0	475	13.5	4.50	114	4.00	102	10.60	268	11.9	302	19.13	486
4.5-FW-E2	68175-1	1	325	9.2	375	10.6	425	12.0	4.50	114	4.00	102	10.60	268	11.9	302	19.13	486
6-FW-E1	68178	1	600	17.0	685	19.4	770	21.8	6.00	152	5.00	127	12.20	309	13.54	344	22.00	560
6-FW-E2	68179	1	500	14.2	565	16.0	630	17.8	6.00	152	5.00	127	12.20	309	13.54	344	22.00	560
7-FW-E1	68182	1	800	22.7	910	25.8	1060	30.0	7.00	178	6.00	152	15.50	394	16.80	427	21.50	545
7-FW-E2	68185	1	710	20.1	830	23.5	960	27.2	7.00	178	6.00	152	15.50	394	16.80	427	21.50	545

REGULAR SESSION CITY COUNCIL MEETING PACKET FOR THE MEETING TO BE HELD ON SEPTEMBER 20, 2021

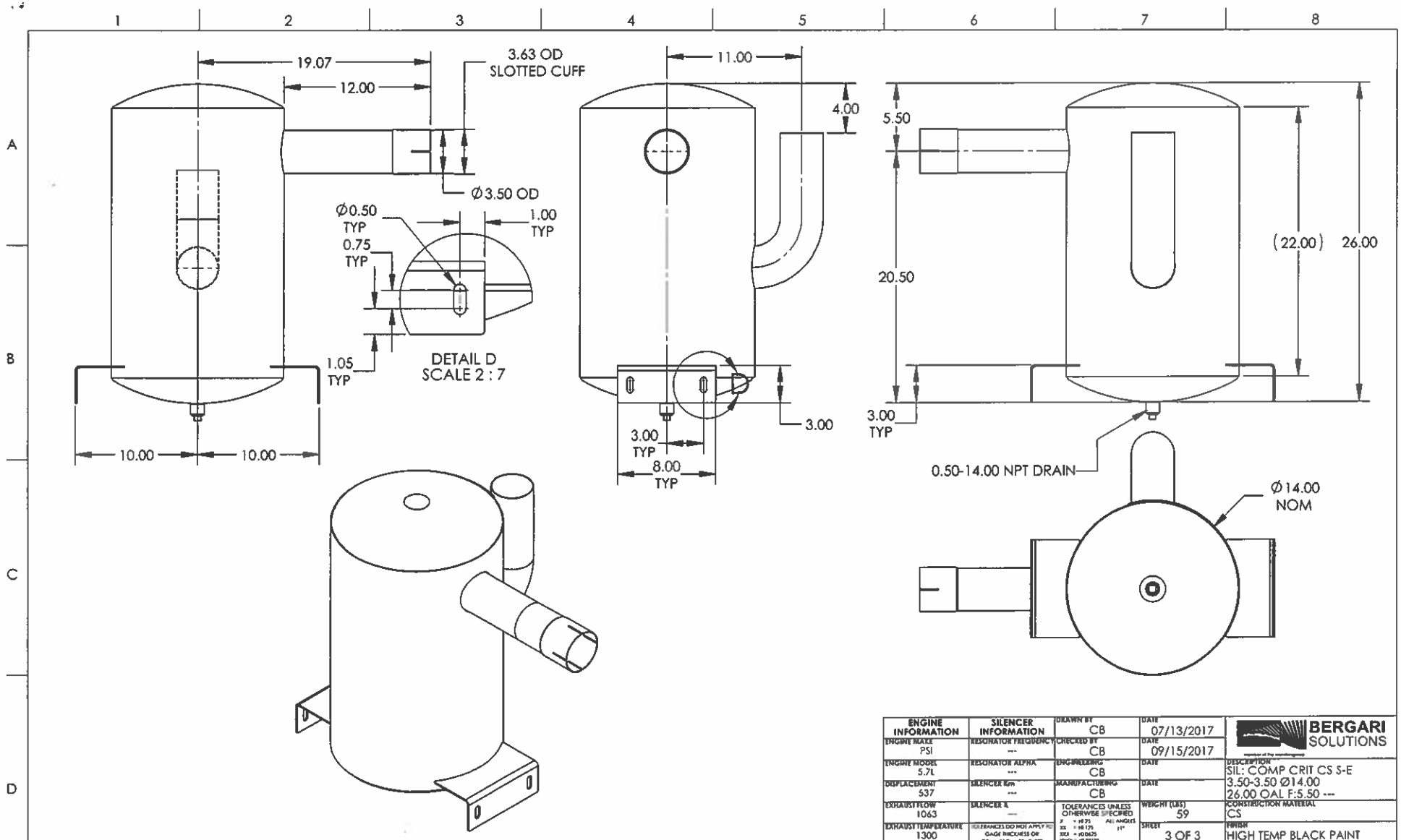
19.07
12.00
3.63 OD
SLOTTED CUFF
Ø3.50 OD
Ø0.50
TYP
0.75
TYP
1.00
TYP
1.05
TYP
DETAIL D
SCALE 2 : 7
10.00
10.00
11.00
4.00
3.00
3.00
TYP
8.00
TYP
5.50
20.50
(22.00)
26.00
3.00
TYP
0.50-14.00 NPT DRAIN
Ø14.00
NOM
ENGINE INFORMATION
ENGINE MAKE PSI
ENGINE MODEL 5.7L
DISPLACEMENT 537
EXHAUST FLOW 1063
EXHAUST TEMPERATURE 1300
MAX BACK PRESSURE 40
RAW SOUND PRESSURE ---
SILENCER INFORMATION
RESONATOR FREQUENCY ---
RESONATOR ALPHA ---
SILENCER Rm ---
SILENCER IL ---
TOLERANCES DO NOT APPLY TO GAGE THICKNESS OR COMMERCIAL FEATURES
THIRD ANGLE PROJECTION
DRAWN BY CB
CHECKED BY CB
ENGINEERING CB
MANUFACTURING CB
TOLERANCES UNLESS OTHERWISE SPECIFIED
ALL ANGLES ±1°
DATE 07/13/2017
DATE 09/15/2017
DATE
DATE
WEIGHT (LBS) 59
SHEET 3 OF 3
BERGARI SOLUTIONS
DESCRIPTION
SIL: COMP CRIT CS S-E
3.50-3.50 Ø14.00
26.00 OAL F:5.50 ---
CONSTRUCTION MATERIAL CS
FINISH HIGH TEMP BLACK PAINT
PART NUMBER 500-008346
REV 02
SCALE (DO NOT SCALE) 1:7
SHEET SIZE B
This drawing and the information contained is confidential and the property of Bergari Solutions, LLC. None of this information is to be copied or shared in any form without the express permission from Bergari Solutions, LLC.
REV. 02
BY CB
DATE 09/15/2017
DESCRIPTION OVERALL HEIGHT CHANGE
ECO ---
CUSTOMER ---
CUSTOMER P/N ---

SPJD-2100 OPEN DIMENSIONAL OVERVIEW

TOP VIEW

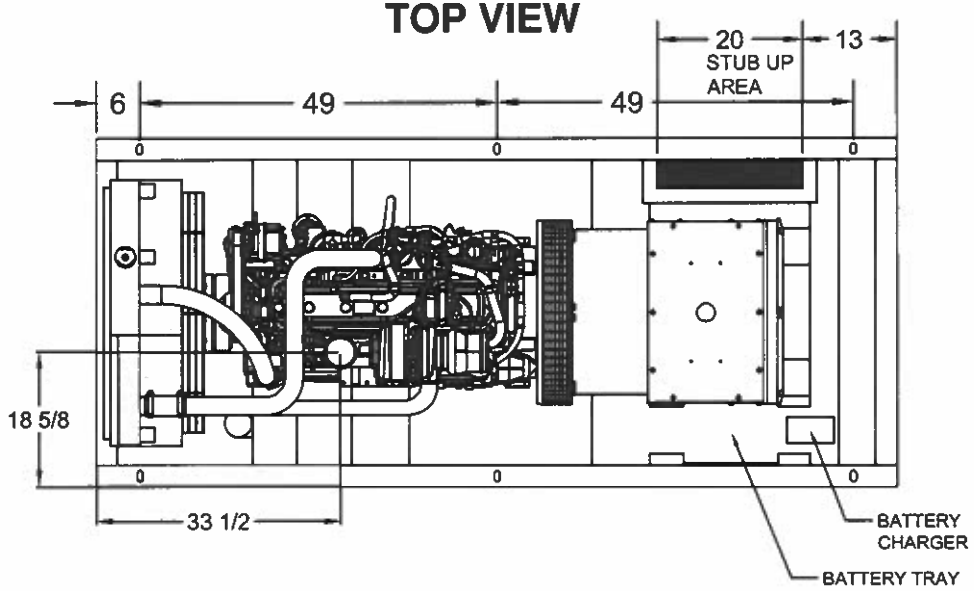

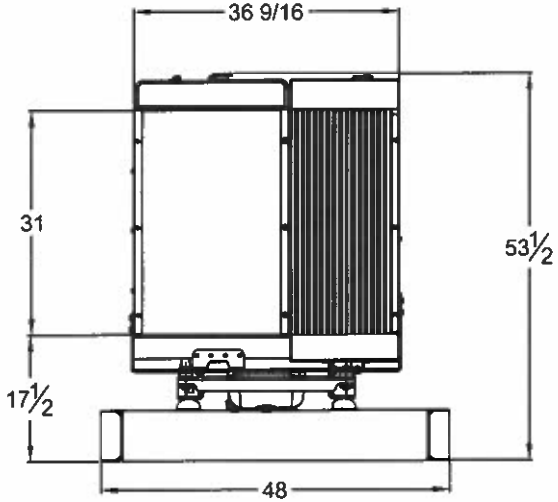

RADIATOR VIEW

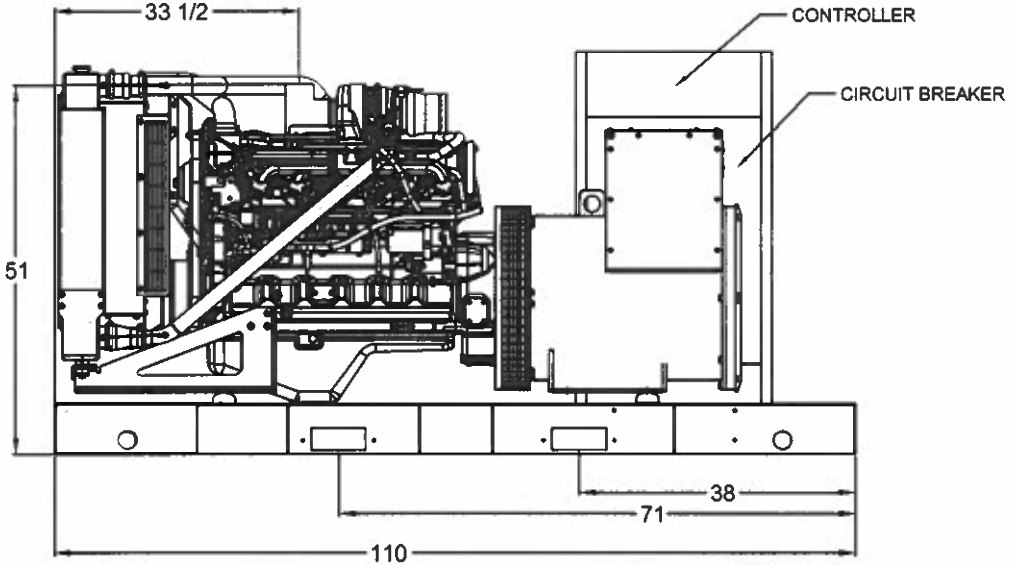

SIDE VIEW

SPJD-2100 OPEN GENSET DIMENSIONAL OVERVIEW-20170707

REGULAR SESSION CITY COUNCIL MEETING PACKET FOR THE MEETING TO BE HELD ON SEPTEMBER 20, 2021

OUTLINE DIMENSIONS FOR SPJD 155 - 210 KW LEVEL 2 ENCLOSURE
(HINGED DOORS)

TOP VIEW

(GEN-SET HAS (4) DOORS, (2) SHOWN OPEN ARE TYPICAL FOR BOTH SIDES)

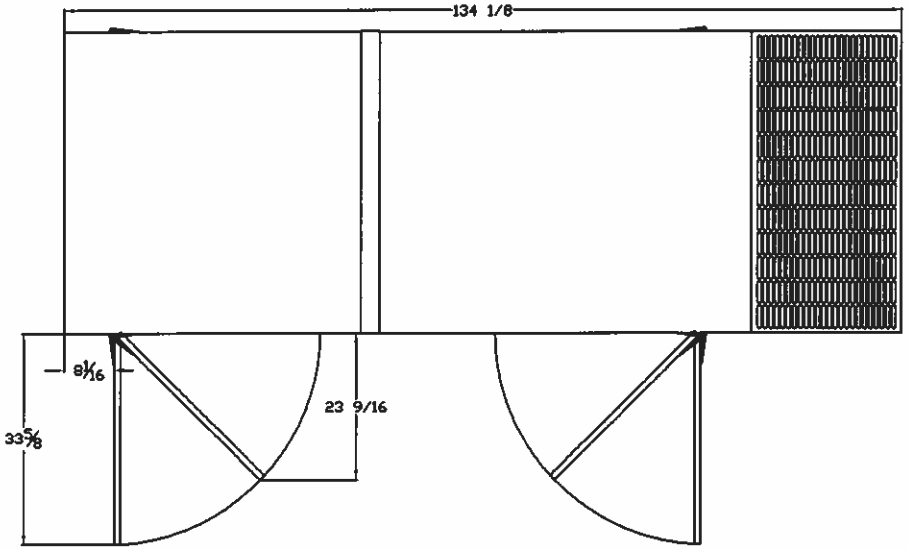

FRAME VIEW

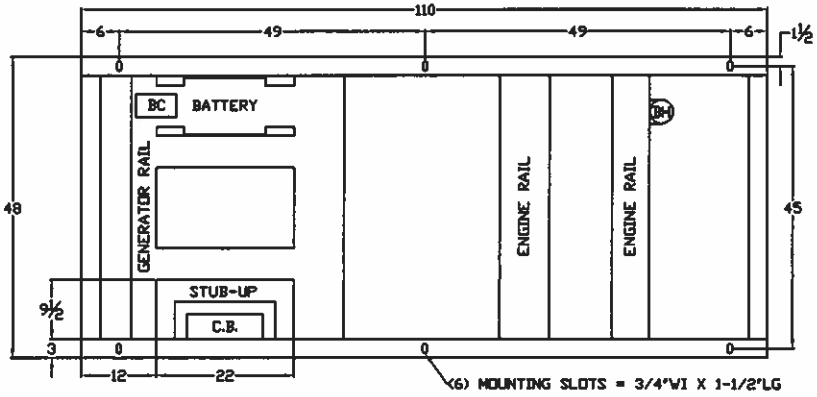

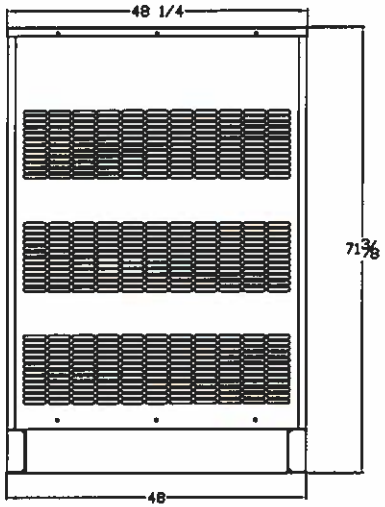

GENERATOR END VIEW

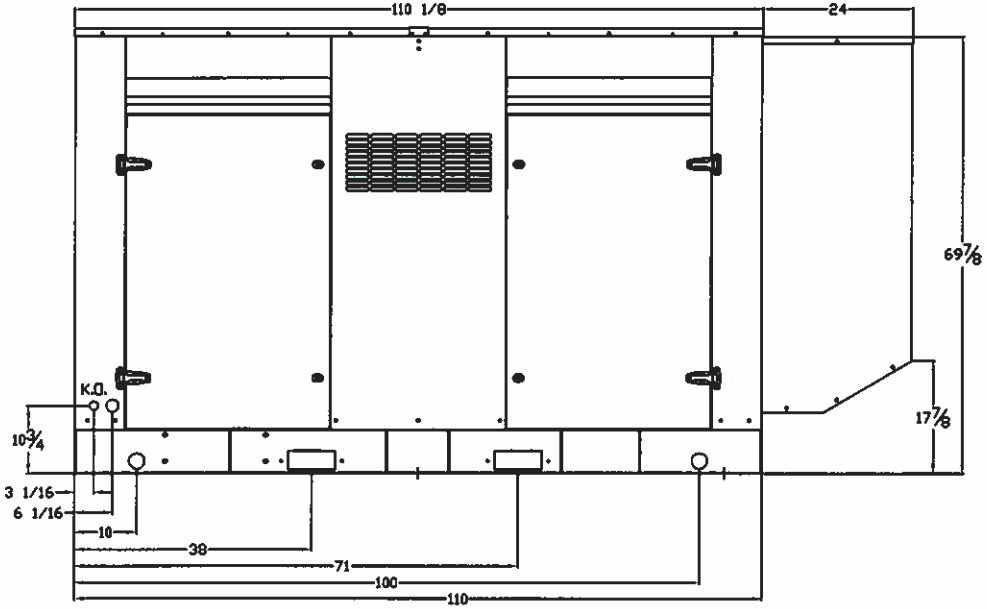

SIDE VIEW

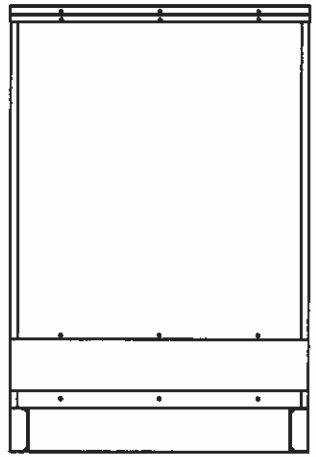

RADIATOR END VIEW

SPJD-1550-2100-L2-GEN-SET-110"LG-HINGES-OVERVIEW-20180202

REGULAR SESSION CITY COUNCIL MEETING PACKET FOR THE MEETING TO BE HELD ON SEPTEMBER 20, 2021

OUTLINE FOR ASCO® 300 SERIES 800-1000 AMPERE "H" FRAME (H3ATS,H3NTS,H3ADTS,H3NDTS) FRONT CONNECTED TRANSFER SWITCHES TYPE 3R, 4, 4X, 12 ENCLOSURE

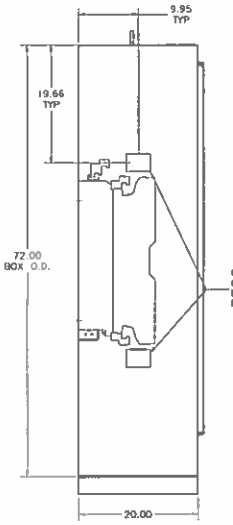

LEFT SIDE

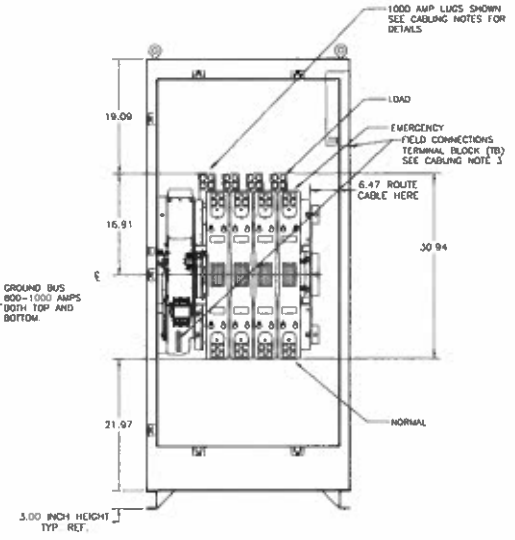

FRONT VIEW
WITHOUT DOOR

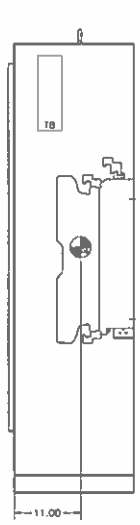

RIGHT SIDE

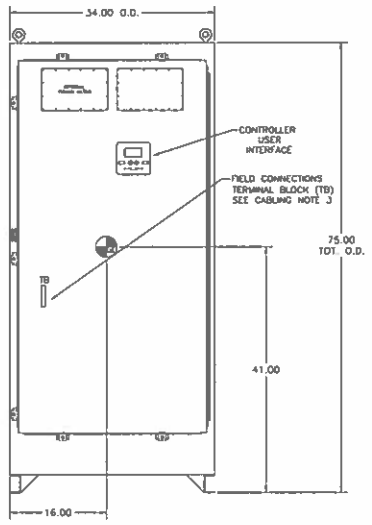

FRONT VIEW
WITH DOOR

GENERAL NOTES

1. TYPE 3R/4/4X/12 ENCLOSURE, FREE STANDING, FLOOR MOUNTED. CODE GAUGE CONSTRUCTION.
2. DOOR HINGED ON RIGHT SIDE, LOCKABLE HASP ON LEFT SIDE, DOOR CLAMPS LEFT TOP AND BOTTOM.
3. FINISH TYPE 3R/4/12: ANSI 61 GRAY, POLYESTER POWDER STANDARD. OTHER ANSI COLORS AVAILABLE CONSULT FACTORY

   TYPE 4X CONSTRUCTED OF 12 GAUGE 304 STAINLESS STEEL.
4. RECOMMENDED CLEARANCES:
   FRONT: 36 INCHES
5. A 20% RATED GROUND BUS IS PROVIDED.
6. UNIT IS DESIGNED FOR COMBINATION TOP AND BOTTOM CABLE ENTRY.
7. NEUTRAL CONFIGURATIONS:
   AN OPTIONAL FULL RATED NEUTRAL CONFIGURATION FOR EACH SOURCE AND THE LOAD MAY BE PROVIDED. WHEN EQUIPPED IT IS IN ONE OF THE FOLLOWING FORMATS AS SPECIFIED BY THE CATALOG NUMBER NO. NEUTRAL TYPE:
   (A) SOLID (COPPER BUS) NEUTRAL
   (B) SWITCHED NEUTRAL POLE
8. ⊕ CENTER OF GRAVITY
9. REMOVE BOTTOM KNOCKOUTS FOR TYPE 3R.

CABLING NOTES

1. ALL SIZES SUPPLIED STANDARD WITH MECHANICAL (SCREW TYPE) LUGS. (SEE AMP SIZE BELOW)
   A. LUG MATERIAL: ALUMINUM ALLOY 6061-T6 WITH ELECTRO TIN PLATED FINISH.
   B. SCREW MATERIAL: ALUMINUM ALLOY 6262-T9 WITH ELECTRO TIN PLATED FINISH.
   C. UL LISTED, CSA CERTIFIED.
   D. LUG SCREW TIGHTENING TORQUE PER UL 486B: 10 FT-LBS.
   E. SUITABLE WIRE BENDING SPACE IS PROVIDED. (SEE AMP SIZE BELOW)
2. GROUND LUGS ARE PROVIDED STANDARD AS FOLLOWS. (SEE AMP SIZE BELOW).
3. CUSTOMER TERMINAL BLOCKS:
   FOR ALL 300 SERIES 3NDTS, 3ADTS UNITS THE TB WILL BE MOUNTED ON THE UPPER RIGHT INSIDE OF ENCLOSURE.
   FOR ALL 3ATS AND 3NTS UNITS TB WILL BE MOUNTED ON THE TRANSFER SWITCH FRAME AS INDICATED.

NOTES 800-1000 AMP SWITCHES

1. SUPPLIED WITH STANDARD MECHANICAL (SCREW TYPE) LUGS ON THE NORMAL, EMERGENCY & LOAD BUS STABS, ONE (1) LUG PER PHASE AND NEUTRAL EACH SUITABLE FOR CONNECTION OF FOUR (4) 1/0 - 750MCM CU/AL CABLE (SEE NOTE "E" BELOW).
   A. SUITABLE WIRE BENDING SPACE IS PROVIDED FOR UP TO FOUR (4) 600MCM CABLES PER TERMINAL PER NEC.
2. GROUND LUGS ARE PROVIDED STANDARD AS FOLLOWS;
   (12) 1/0 - 750MCM CU/AL CABLE CONNECTIONS.

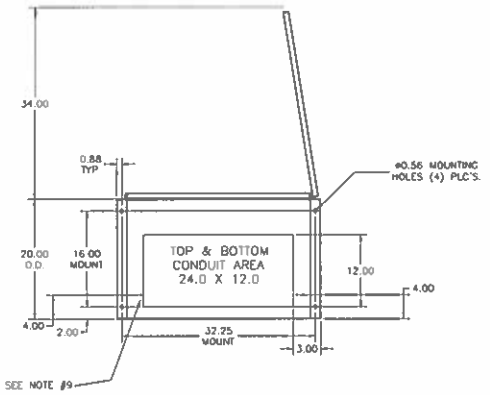

BOTTOM VIEW

REV	DESCRIPTION	BY	DATE
B	251397	BR	10/24/14
	SEE ECN		
A	247887	TR	BR
	SEE ECN		
—	245913	BMW	SDH 11/4/13
	NEW RELEASE		

PROJECT NAME:
COMPOSITE OUTLINE
300 SERIES
"H" FRAME 800-1000 AMP, TYPE 3R/4/4X/12

THIRD ANGLE PROJECTION

	BY	DATE
DRAWN BY	BMW	11/4/13
CHECKED		
PROJECT APPROVAL		
TECH. SUPPORT	SDH	11/4/13

MANUFACTURING TOLERANCES TO BE IN ACCORDANCE WITH ASCO PROCEDURE MP-0002, FOR PLASTIC PARTS SEE MP-0003

PROPERTY OF ASCO POWER TECHNOLOGIES, AND FURNISHED FOR SHOP USE ONLY. ALL RIGHTS OF REUSE OR DUPLICATION ARE RESERVED.

ASCO® ASCO Power Technologies, LP FLORHAM PARK, NEW JERSEY 07932 U.S.A.

COMPUTER GENERATED DRAWING

SCALE none DWG DS

DWG. NO. 1001394-002

REV. B SH. 1 OF 1 PART NO. 251397

REGULAR SESSION CITY COUNCIL MEETING PACKET FOR THE MEETING TO BE HELD ON SEPTEMBER 20, 2021

total energy solutions
COMPANY, LLC

Our Company

Total Energy Solutions Company, LLC was founded in Lafayette, Louisiana in 2006 in response to the growing need for a quality generator sales and service company that understands the services and products required in the power generation market. The management philosophy of Total Energy Solutions is built around service after the sale.

Our company is unique in that we take the time to understand your specific needs. We use our vast knowledge of the products and services available to meet those needs and develop the right solution for you. From sales and service, to logistics, we are here for you 24/7/365 with energy solutions that will protect your homes and businesses at all times, regardless of their location.

We demand the highest quality products from our vendors, distributing brands such as Cummins/Onan, Kohler, Taylor Power and MQ Power to name a few. We serve various types of clients including: homeowners, small businesses, restaurants, grocery stores, schools, hospitals, nursing homes, oil and gas companies, manufacturing plants and more.

By partnering with only the highest quality manufacturers, we are able to provide the latest technology in power generation along with welder generators, switchgear, light towers, and a host of other services.

REGULAR SESSION CITY COUNCIL MEETING PACKET FOR THE MEETING TO BE HELD ON SEPTEMBER 20, 2021

205 HWY 96 · Broussard LA 70518 · 337-837-1595 phone · 337-837-1433 fax
totalenergysolutions.com

total energy solutions
COMPANY, LLC

Service Centers	7
Service Techs	24
Service Vehicles	34
Safety	Top S.H.E.L.F Award
	SHARP Certified
	TWIC Cards
	EMR = 0.81

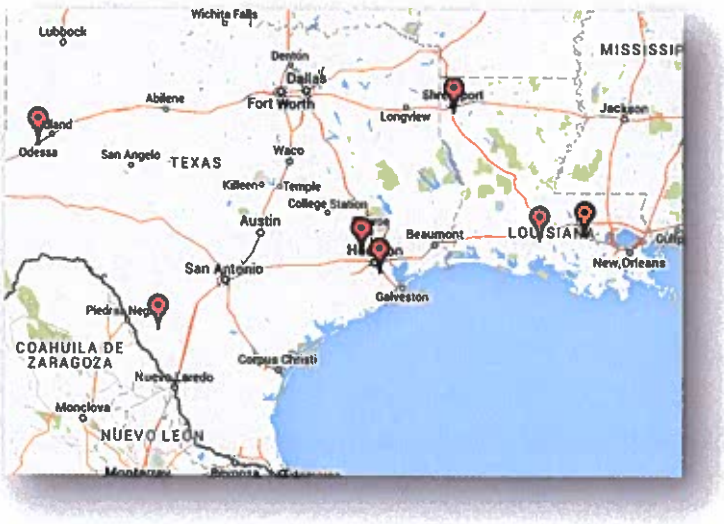

REGULAR SESSION CITY COUNCIL MEETING PACKET FOR THE MEETING TO BE HELD ON SEPTEMBER 20, 2021

total energy solutions
COMPANY, LLC

Our Executive Team

The management team of Total Energy Solutions is lead by co-owners Mark Mire, Ron Grant and Bret Adams, who possess a combined total of more than half a century of experience in the power generation market. All three co-owners have been involved with contracts protecting Fortune 500 companies covering routine maintenance and disaster management related to power generation solutions. Their vast experience, gained from solving problems in the power generation market, is part of what places Total Energy Solutions a cut above its competition.



Mark Mire

With 30 years of sales and management experience, most of which had been with a leading company providing temporary power generation on a global level, Mark's experience in business development and managing customer relations has proven key to the phenomenal growth of Total Energy Solutions. In particular, Mark has instilled his distinctive "can-do" energy and attitude into the culture of the company, which has translated into exceptional and responsive customer service. As a result, the number of referrals passed along by customers who are astounded and appreciative of the fast turnaround for quotes and product requests has spurred additional offices in Louisiana and Texas. Mark's infectious enthusiasm for meeting new people, understanding his client's

REGULAR SESSION CITY COUNCIL MEETING PACKET FOR THE MEETING TO BE HELD ON SEPTEMBER 20, 2021

problems and frustrations, then creating the perfect custom solution to dispel those problems may seem an easy equation for creating loyalty among customers new and old, but Mark's spirit and genuine personality elevate the simple process of doing business to that of creating strong business relationships. A devoted husband for over 27 years and father of two sons, Mark enjoys spending his free time with his family.



Bret Adams

Bret has 20 years of generator experience mostly dedicated to parts, service and repair. Bret joined a leading temporary power company in the accounting department but quickly moved on to the service side of the business where he managed the national logistics group for two years. He later managed the national service department and was also the national parts manager responsible for parts inventory in 65 locations. Bret attributes the success of Total Energy Solutions to a core philosophy of serving customers, and integrating that mantra into every aspect of the company's operational process. He has been married for 27 years and is the father of two sons, one of whom recently joined

REGULAR SESSION CITY COUNCIL MEETING PACKET FOR THE MEETING TO BE HELD ON SEPTEMBER 20, 2021

the family business, and the second is a junior at LSU. An avid outdoorsman, Bret spends his downtime fishing and hunting, although his heart is never too far from the business.



Ron Grant

Ron has spent the last 26 years in the power generation business. Prior to partnering with Mark and Bret to start Total Energy Solutions in 2006, Ron worked for a leading global power company for 19 years. During his tenure, Ron held many sales and managerial positions but none were more enjoyable or rewarding than business development. Ron strongly believes that working with customers to solve problems and establish long term working relationships is the key to success in business.

From its inception, the foundation of Total Energy Solutions has been developing a premier generator sales and service company that delivers the best possible service and equipment available. Ron has been married for thirty years and has a 23-year-old daughter and a 21-year-old son. Ron spends most of his spare time with his family and enjoys all outdoor sports activities.

REGULAR SESSION CITY COUNCIL MEETING PACKET FOR THE MEETING TO BE HELD ON SEPTEMBER 20, 2021

total energy solutions
COMPANY, LLC

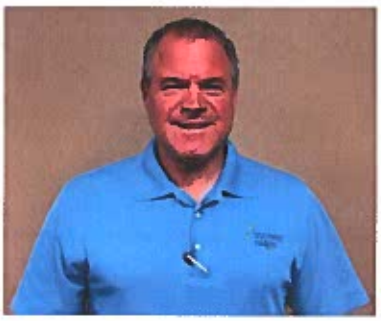

Tom McCroskey

Tom joined Total Energy Solutions in 2009 after 10 years as the owner of a commercial printing company with 15 employees. His 22 years of sales and management experience were vital to the development of our Texas region which Tom manages to this day. A graduate of the University of Houston who enjoys spending his spare time on the water fishing with his wife and two teenage daughters, Tom believes that great service after the sale is paramount to building a strong and loyal customer base. Since 2009, Tom has helped build our Texas region into 4 locations with 25 employees and counting. His team is committed to keeping our customers power needs fulfilled 24/7/365.

REGULAR SESSION CITY COUNCIL MEETING PACKET FOR THE MEETING TO BE HELD ON SEPTEMBER 20, 2021

total energy solutions
COMPANY, LLC

Our Process

Consultation

During the discovery phase of our relationship we take the time to get to know you and your unique needs. We learn all we can about your business, the challenges you face, your likes and dislikes.

Research

Once we have an understanding of your needs, we get to work exploring all of the available options and formulate a proposal that best fits those needs.

Presentation

Our proposal presentation can take a number of formats depending on which works best for you. Whether it is a formal in person presentation, a less formal conversation, a written bid, or web meeting, we offer you the opportunity to review the options and openly discuss your feedback to fine tune the proposal.

Project Launch

Once the proposal is approved and payment terms have been agreed upon, our team gets to work executing the project based on the projects objectives.

Project Completion

Once complete, our team will finalize all deliverables, paper work and warranty details when applicable. But our service doesn't end there. We are available 24/7/365 to assist you however we can.

REGULAR SESSION CITY COUNCIL MEETING PACKET FOR THE MEETING TO BE HELD ON SEPTEMBER 20, 2021

total energy solutions
COMPANY, LLC

205 HWY 96 · Broussard LA 70518 · 337-837-1595 phone · 337-837-1433 fax
totalenergysolutions.com

total energy solutions
COMPANY, LLC

Our Services

- Generator Sales – Residential, Light Commercial, Industrial
- Generator Repairs with 24/7/365 Emergency Service
- Preventative Maintenance Plans
- Resistive Load Bank Testing
- Automatic Transfer Switches, Trailers and Auxiliary Fuel Tanks
- Generator Rentals
- Storage & Logistics Programs
- Contingency Planning
- Peak Shaving Management of Customer Owned Equipment

Our Portfolio

At Total Energy Solutions we are 100% client focused; "Service Beyond All Expectations" is our mantra. To that end, we take the time to get to know and understand the needs of each and every one of our clients, regardless of their industry.

Below is a sampling of the solutions we have provided to clients in various industries including:

- Energy
- Government & Municipalities
- Healthcare

REGULAR SESSION CITY COUNCIL MEETING PACKET FOR THE MEETING TO BE HELD ON SEPTEMBER 20, 2021

total energy solutions
COMPANY, LLC

- Telecommunications
- Hospitality & Entertainment
- Commercial

REGULAR SESSION CITY COUNCIL MEETING PACKET FOR THE MEETING TO BE HELD ON SEPTEMBER 20, 2021

total energy solutions
COMPANY, LLC

Energy Industry

Entergy Nuclear Plant

After the nuclear disaster at the Fukushima plant in Japan in 2011, US policy makers enacted the NRC Mitigation Strategies Order in March of 2012. This order states that all U.S. nuclear power plants are required to implement strategies that will allow them to cope without their permanent electrical power sources for an indefinite amount of time. In response, companies like Entergy called on Total Energy Solutions to help them design and implement redundant backup generator and power distribution systems at their plants.

Project Details

11 Nuclear Power Plants
5 States
20 Generators ranging from 8kW – 800kW including trailer mounted generators
Utility Trailers
Enclosed Trailers
Light Towers
Wall Mounted Quick Connect Generator Docking Panels
Full onsite installation
Preventative Maintenance Plan

REGULAR SESSION CITY COUNCIL MEETING PACKET FOR THE MEETING TO BE HELD ON SEPTEMBER 20, 2021

total energy solutions
COMPANY, LLC

Energy Industry

Hurricane Sandy Response for a Leading Pipeline Company

When installing a generator at every facility is just not financially feasible, our storage and logistics programs are an economical and convenient solution. A leading pipeline company purchased (8) 2 MW diesel generators from us to protect their pipeline facilities that run from Texas to New Jersey. In the event of a power outage, Total Energy Solutions deploys these units to run the motors that are required to open and close the pipeline valves, preserving the flow of fuel across the United States.

The best part about our storage and logistics program is that we store and maintain these client owned generators at our facilities, ensuring that they are fully operational and ready to be deployed when needed. We also handle all of the logistics and deployment of these units should an emergency occur, as was the case in 2012.

Hurricane Sandy swept the entire eastern seaboard, inflicting the most damage on New Jersey and New York. Within 24 hours, we mobilized the generators belonging to a leading pipeline company along with our personnel to New Jersey, where we connected the generators to their facility which supplies fuel to an important local airport. We kept our technicians on site for three weeks to ensure that the generators were fully operational and then returned them to our facility for maintenance and storage for the next time they will be needed.

REGULAR SESSION CITY COUNCIL MEETING PACKET FOR THE MEETING TO BE HELD ON SEPTEMBER 20, 2021

total energy solutions
COMPANY, LLC

"Please accept our sincere gratitude and appreciation for your assistance in the aftermath of Hurricane Sandy. Partnering with your organization, we successfully responded to this devastating storm and restored the supply of gasoline and other liquid fuels promptly and safely."

-Timothy Felt – a leading pipeline company

Energy Industry

Shale Play Generator Solutions

With the growth of the shale plays in north Louisiana, and Texas, Total Energy Solutions has become the go-to company for natural gas generator sales and rentals. Shale play oil companies, including Chesapeake Energy, EP Energy and Spartan Energy, rely on us to provide them with convenient, reliable and cost effective energy solutions.



We currently have 250 Natural Gas generators on rent and an additional 200 sold in the Eagleford and Permian shale. Each of these generators is serviced every 30 days by our team of factory trained technicians. This not

only maintains the longevity of our rental fleet, but also ensures their reliability for our clients.

Chesapeake – Eagleford
(145) 60kW/80kW
Nat Gas Generators
Maintenance every 30 days

EP Energy – Eagleford
(4) 400kw Nat Gas Generators

Spartan Energy – Three Rivers
(10) 400kw Nat Gas Generators

Oil Patch
Sold 25 150kW rental style Diesel Generators for their rental fleet.



REGULAR SESSION CITY COUNCIL MEETING PACKET FOR THE MEETING TO BE HELD ON SEPTEMBER 20, 2021

total energy solutions
COMPANY, LLC

Government & Municipalities

Lamar Dixon Expo Center

After Hurricane Katrina hit the Gulf Coast in 2005, the Department of Homeland Security issued a grant to help local governments establish designated evacuation centers capable of housing evacuees and emergency responders in the aftermath of a natural disaster.

In 2011, Ascension Parish decided to pursue the grant to establish their Lamar Dixon Expo Center in Gonzales LA as an emergency site. The overall grant approval process took a little over 3 years to complete and entailed multiple site evaluations, in-depth powers needs analysis and specification writing, all items Total Energy Solutions assisted with. Once approved, Total Energy Solutions managed the entire project from pad installation, to final generator installation, connection and testing.



Project Details

(1) 80kW diesel generator with auxiliary fuel tank.
(1) 350kW diesel generator with auxiliary fuel tank.
(2) 600kW diesel generators
(1) 800kW diesel generator

REGULAR SESSION CITY COUNCIL MEETING PACKET FOR THE MEETING TO BE HELD ON SEPTEMBER 20, 2021

total energy solutions COMPANY, LLC

(5) Automatic Transfer Switches
Installation labor and material for:
Foundations, Bollards, & Generators

Spanish Cove MUD
250kW generator for a water lift station.

City of Fort Worth
500kW mobile generator for a water lift station.

State of Texas
1 mW and 400kW generators for a prison facility in Rosharon TX.

Healthcare Industry

Hospitals, nursing homes and other medical facilities that are equipped with life-support systems are required by NFPA 101(00) to have emergency generators installed, tested and maintained on a regular basis. Since 2006, Total Energy Solutions has provided medical facilities large and small with timely, thorough and friendly service helping them maintain compliance with this code. Our medical clients range from multi-location national hospital corporations including HCA and Ochsner, to small single location nursing and acute care homes. Today, we service, maintain, test and repair over 90 life saving standby power systems in Texas and Louisiana.

Ochsner Health System Locations – 5 Generators – 12 Size – 15kW – 2 MW

REGULAR SESSION CITY COUNCIL MEETING PACKET FOR THE MEETING TO BE HELD ON SEPTEMBER 20, 2021

total energy solutions COMPANY, LLC

One major and one minor preventative maintenance annually.

Pinecrest Support & Services Center

Locations – 11
Generators – 11
Size – 20kW – 45kW
Annual load bank testing

Management 7

Locations – 12
Generators –
Size – 20kW – 400kW
One major and one minor preventative maintenance annually.

Lake Charles Memorial Hospital

Locations – 4
Generators – 9
Size – 60kW – 1000kW
One major preventative maintenance annually and repairs as needed.

REGULAR SESSION CITY COUNCIL MEETING PACKET FOR THE MEETING TO BE HELD ON SEPTEMBER 20, 2021

total energy solutions
COMPANY, LLC

Telecommunications Industry

Total Energy Solutions provides generator maintenance and repair to the top two telecom providers in the country; the first since 2008 and the second since 2013. In order to maintain emergency access to 911, telecom companies are required to maintain an emergency backup generator at each of their tower locations. This ensures that their customers have access to phone service in case of an emergency. Each year, we service between 2000 and 3500 generators across our territory, some of which are in remote locations.

Project Details

Generators	2000-3500/ yr
Locations	Texas and Louisiana
Types of generators	50-60kW Diesel and Natural Gas
Service Schedule	Bi-Annual preventative maintenance

REGULAR SESSION CITY COUNCIL MEETING PACKET FOR THE MEETING TO BE HELD ON SEPTEMBER 20, 2021

total energy solutions
COMPANY, LLC

Hospitality & Entertainment

Westin Galleria Hotel – Houston, TX

Each of our clients is unique, and this project was no exception. The Westin Galleria Hotel in Houston TX asked us to remove a 200kW generator and install a new 200kW natural gas unit, which is simple enough;
however, the unit to be removed was on the roof of their 25 story building and the new unit was to be installed on the rooftop of their 6 story building.



So, we partnered up with a Houston crane company and coordinated the complex removal and installation of two machines each weighing approximately 12,000 lbs. This required a 60 Ton crane and a permit to close the street below for safety. Police were present, as well as 4 spotters for added safety. After re-routing the electrical connections from the 25th floor to the 6th floor we were ready to connect the new generator and the Westin Galleria Hotel and their guests are now protected from power outages.

REGULAR SESSION CITY COUNCIL MEETING PACKET FOR THE MEETING TO BE HELD ON SEPTEMBER 20, 2021

total energy solutions
COMPANY, LLC

Chitimacha Tribe of LA and Cypress Bayou Casino

Locations – 11
Generators – 17
Size – 35kW – 2000kW

St. Regis Hotel Houston

Locations – 1
Generators – 1
Size – 1MW
Quarterly inspections, one annual preventative maintenance and one load bank test.

Hilton Plaza Hotel

Locations – 2
Generators – 2
Size – 250kW – 400kW
Quarterly inspections, one annual preventative maintenance and one load bank test.

REGULAR SESSION CITY COUNCIL MEETING PACKET FOR THE MEETING TO BE HELD ON SEPTEMBER 20, 2021

total energy solutions COMPANY, LLC

Commercial

The Boiling Point Restaurant

Stand by generators are like an insurance policy, you hope you never need it, and most days you don't; however, as was the case with The Boiling Point restaurant in Lafayette LA, you never know when you will.

In 2014, The Boiling Point's owner, Donovan Romero purchased a 125 kW generator to help protect him from the loss of $1000's in food costs and lost revenue should a power outage occur, even though the past few hurricane seasons had been relatively quiet.

As fate would have it, the day following the installation of his generator, he lost power with a restaurant full of customers, not due to a hurricane, but due to an undetermined power supply issue. As he recalled,

"The power went out, and not ten seconds later, the generator kicked on and we were back in business."



Alexander's Grocery Store

REGULAR SESSION CITY COUNCIL MEETING PACKET FOR THE MEETING TO BE HELD ON SEPTEMBER 20, 2021

total energy solutions
COMPANY, LLC

450 kW diesel generator
Service

LeBlanc's Supermarket
600kW diesel generator

Alcon Manufacturing Facility
1.6mW diesel generator

REGULAR SESSION CITY COUNCIL MEETING PACKET FOR THE MEETING TO BE HELD ON SEPTEMBER 20, 2021

total energy solutions
COMPANY, LLC

Client Testimonials

"...we appreciate your professionalism and all the "hand-holding" we have had through this entire process!"

- Kathy – Radney Management & Investments, Inc. Houston TX

"...everyone we encountered with your company was very professional and made us feel as though our concerns were important to them. This has been a very pleasant experience and I will recommend your company and Kohler generators to anyone I know is in the market for a home standby system."

-Mark – Home Owner Prairieville, LA

"...I do so much appreciate your professionalism, money saving suggestions, excellent communication and the expertise you all provided throughout the whole experience...."

- Jim Smith – Home Owner Baton Rouge, LA

"Thank you for getting the generators back online, the hatchery really needs those and their critical time is fast approaching, so thank you for your quick response and great service."

- Joel Snider – LA Wildlife and Fisheries

"Just a quick note to express my gratitude to you for the great job you and your team of service people have been doing for EXCO. Your people have responded quickly to all of

REGULAR SESSION CITY COUNCIL MEETING PACKET FOR THE MEETING TO BE HELD ON SEPTEMBER 20, 2021

total energy solutions
COMPANY, LLC

our needs and professionally addressed each mechanical problem..."

- Jack Shadle Jr. – EXCO Operating Company, LP

"Please accept our sincere gratitude and appreciation for your assistance in the aftermath of Hurricane Sandy. Partnering with your organization, we successfully responded to this devastating storm and restored the supply of gasoline and other liquid fuels promptly and safely."

-Timothy Felt – a leading pipeline company

REGULAR SESSION CITY COUNCIL MEETING PACKET FOR THE MEETING TO BE HELD ON SEPTEMBER 20, 2021

total energy solutions
COMPANY, LLC

Who We Are

Our Mission

Our mission is to deliver high-quality energy solutions helping our customers find new and better ways to protect themselves, their employees and achieve total business continuity. Through our industry expertise, we design and implement the safest, most efficient plans of purchasing, service and logistics of energy solution assets – 24/7/365 – supporting and servicing the communities in which we live.

Our Vision

To establish our company as the top supplier of temporary power in the states we operate.

To deliver superior products at competitive prices with exceptional service to our customers providing improved reliability and uptime in their business.

To provide a positive, energetic and safe environment for our employees and supply them with skills enabling them to continually excel, grow and prosper within the company.

Our Values

- **Excellence** – Constantly exceeding customer expectations.
- **Quality** – Consistently providing the best quality products and customer service.
- **Respect** – Acknowledging the humanness and worth of others.
- **Commitment** – A compelling drive to do what we do because it is the right thing to do.

- **Teamwork** – Recognizing and utilizing our individual skills and abilities together to achieve organizational success.
- **Integrity** – Always acting with the highest morals and ethical standards, even when no one is watching.

REGULAR SESSION CITY COUNCIL MEETING PACKET FOR THE MEETING TO BE HELD ON SEPTEMBER 20, 2021

BID BOND

Travelers Casualty and Surety Company of America
Hartford, CT 06183

KNOWN ALL BY THESE PRESENTS, That we, Total Energy Solutions, LLC, as Principal, and Travelers Casualty and Surety Company of America, as Surety, are held and firmly bound unto City of Jersey Village, as Obligee, in the sum of Five percent of the amount bid Dollars (5%) for the payment of which we bind ourselves, and our successors and assigns, jointly and severally, as provided herein.

WHEREAS, Principal has submitted or is about to submit a bid to the Obligee on a contract for Request for Proposal 2021-06, City of Jersey Village Generators for Jersey Village Fire Station, Jersey Village Police Station, Village Drive Water Treatment Plant ("Project").

NOW, THEREFORE, the condition of this bond is that if Obligee accepts Principal's bid, and Principal enters into a contract with Obligee in conformance with the terms of the bid and provides such bond or bonds as may be specified in the bidding or contract documents, then this obligation shall be void; otherwise Principal and Surety will pay to Obligee the difference between the amount of Principal's bid and the amount for which Obligee shall in good faith contract with another person or entity to perform the work covered by Principal's bid, but in no event shall Surety's and Principal's liability exceed the penal sum of this bond.

Signed this 24th day of August, 2021.

Total Energy Solutions, LLC
(Principal)

By: _____

Travelers Casualty and Surety Company of America

By: _____
Tawanda A. Weatherspoon, Attorney-in-Fact

REGULAR SESSION CITY COUNCIL MEETING PACKET FOR THE MEETING TO BE HELD ON SEPTEMBER 20, 2021

TRAVELERS

Travelers Casualty and Surety Company of America
Travelers Casualty and Surety Company
St. Paul Fire and Marine Insurance Company

POWER OF ATTORNEY

KNOW ALL MEN BY THESE PRESENTS: That Travelers Casualty and Surety Company of America, Travelers Casualty and Surety Company, and St. Paul Fire and Marine Insurance Company are corporations duly organized under the laws of the State of Connecticut (herein collectively called the "Companies"), and that the Companies do hereby make, constitute and appoint **TAWANDA A WEATHERSPOON** of **BATON ROUGE**, **Louisiana**, their true and lawful Attorney(s)-in-Fact to sign, execute, seal and acknowledge any and all bonds, recognizances, conditional undertakings and other writings obligatory in the nature thereof on behalf of the Companies in their business of guaranteeing the fidelity of persons, guaranteeing the performance of contracts and executing or guaranteeing bonds and undertakings required or permitted in any actions or proceedings allowed by law.

IN WITNESS WHEREOF, the Companies have caused this instrument to be signed, and their corporate seals to be hereto affixed, this **21st** day of **April, 2021.**

State of Connecticut

City of Hartford ss.

By: _____
Robert L. Raney, Senior Vice President

On this the **21st** day of **April, 2021**, before me personally appeared **Robert L. Raney**, who acknowledged himself to be the Senior Vice President of each of the Companies, and that he, as such, being authorized so to do, executed the foregoing instrument for the purposes therein contained by signing on behalf of said Companies by himself as a duly authorized officer.

IN WITNESS WHEREOF, I hereunto set my hand and official seal.

My Commission expires the **30th** day of **June, 2026**

_____
Anna P. Nowik, Notary Public

This Power of Attorney is granted under and by the authority of the following resolutions adopted by the Boards of Directors of each of the Companies, which resolutions are now in full force and effect, reading as follows:

RESOLVED, that the Chairman, the President, any Vice Chairman, any Executive Vice President, any Senior Vice President, any Vice President, any Second Vice President, the Treasurer, any Assistant Treasurer, the Corporate Secretary or any Assistant Secretary may appoint Attorneys-in-Fact and Agents to act for and on behalf of the Company and may give such appointee such authority as his or her certificate of authority may prescribe to sign with the Company's name and seal with the Company's seal bonds, recognizances, contracts of indemnity, and other writings obligatory in the nature of a bond, recognizance, or conditional undertaking, and any of said officers or the Board of Directors at any time may remove any such appointee and revoke the power given him or her; and it is

FURTHER RESOLVED, that the Chairman, the President, any Vice Chairman, any Executive Vice President, any Senior Vice President or any Vice President may delegate all or any part of the foregoing authority to one or more officers or employees of this Company, provided that each such delegation is in writing and a copy thereof is filed in the office of the Secretary; and it is

FURTHER RESOLVED, that any bond, recognizance, contract of indemnity, or writing obligatory in the nature of a bond, recognizance, or conditional undertaking shall be valid and binding upon the Company when (a) signed by the President, any Vice Chairman, any Executive Vice President, any Senior Vice President or any Vice President, any Second Vice President, the Treasurer, any Assistant Treasurer, the Corporate Secretary or any Assistant Secretary and duly attested and sealed with the Company's seal by a Secretary or Assistant Secretary; or (b) duly executed (under seal, if required) by one or more Attorneys-in-Fact and Agents pursuant to the power prescribed in his or her certificate or their certificates of authority or by one or more Company officers pursuant to a written delegation of authority; and it is

FURTHER RESOLVED, that the signature of each of the following officers: President, any Executive Vice President, any Senior Vice President, any Vice President, any Assistant Vice President, any Secretary, any Assistant Secretary, and the seal of the Company may be affixed by facsimile to any Power of Attorney or to any certificate relating thereto appointing Resident Vice Presidents, Resident Assistant Secretaries or Attorneys-in-Fact for purposes only of executing and attesting bonds and undertakings and other writings obligatory in the nature thereof, and any such Power of Attorney or certificate bearing such facsimile signature or facsimile seal shall be valid and binding upon the Company and any such power so executed and certified by such facsimile signature and facsimile seal shall be valid and binding on the Company in the future with respect to any bond or understanding to which it is attached.

I, **Kevin E. Hughes**, the undersigned, Assistant Secretary of each of the Companies, do hereby certify that the above and foregoing is a true and correct copy of the Power of Attorney executed by said Companies, which remains in full force and effect.

Dated this 24th day of August, 2021

_____
Kevin E. Hughes, Assistant Secretary

To verify the authenticity of this Power of Attorney, please call us at 1-800-421-3880.
Please refer to the above-named Attorney(s)-in-Fact and the details of the bond to which this Power of Attorney is attached.

REGULAR SESSION CITY COUNCIL MEETING PACKET FOR THE MEETING TO BE HELD ON SEPTEMBER 20, 2021

- Total Energy Solutions Company, LLC
- Tax Id-20-5134059
- Doug Hall-Outside Sales
- 281-468-5101
- Dough@totalenergysolutions.com
- 20500 Clay Center Dr Katy Tx, 77449
- Mailing Address is the same

REGULAR SESSION CITY COUNCIL MEETING PACKET FOR THE MEETING TO BE HELD ON SEPTEMBER 20, 2021

REGULAR SESSION CITY COUNCIL MEETING PACKET FOR THE MEETING TO BE HELD ON SEPTEMBER 20, 2021

total energy solutions COMPANY, LLC

TES Reference List

Colonial Pipeline

- 250kw Natural Gas Generator and 400amp ATS
- Manage/Service 8 – 2000kW diesels for emergency deployments
- Service all their standby generators in Louisiana and Texas (32 units)
- Tony Leo – 678-215-2205

Central Power

- Multiple natural gas engine (oil field generators) rebuilds
- Brandon Hemreck – 316-516-8107

Mason Creek MUD

- Sold and installed 1000kW
- Sold and installed an 85kW
- Sold and installed a 1500kw
- Provide maintenance on all their standby generators
- Jamie Parrott – 281-960-3762

Spartan Energy

- 10 - 380kw NG Generators
- 1 MW NG Generator
- Sold 20 – 40kw natural gas generators
- Seth Wiley – 361-318-2513

Montgomery County

- Service on all generators (about 70 units)
- Installed UPS and ATS on secure building
- Entering 7th year
- Stephanie Keeton – 936-538-3536

Bucees

- Sold and installed 100kw at corporate office
- Sold and installed 80kW at fueling company
- Sold and installed 60kW at ranch
- Sold and install generator at Store #1
- Sold and installed 1750kw generator in Baldwin, AL
- Provide service on all their generators purchased
- Chris Anderson – 979-238-6313

Big D – Oil field

- Provide natural gas rental generators (88 units)
- Provide all corrective and scheduled service
- Trey Villanueva – 432-634-1380

RB Stewart

- Provide standby generators (installation/service)
- Pete Petrosky – 979-848-6686

REQUEST FOR PROPOSAL 2021-05

CITY OF JERSEY VILLAGE
GENERATORS FOR
JERSEY VILLAGE FIRE STATION
JERSEY VILLAGE POLICE STATON
VILLAGE DRIVE WATER TREATMENT PLANT

DUE DATE AUGUST 24, 2021

REGULAR SESSION CITY COUNCIL MEETING PACKET FOR THE MEETING TO BE HELD ON SEPTEMBER 20, 2021

Contents

INTRODUCTION AND PROJECT INFORMATION 3
DETAILED SPECIFICATONS AND SCOPE OF WORK 3
QUESTIONS ON RFP 6
BONDS 6
MINIMUM STANDARDS FOR RESPONSIBLE PROSPECTIVE VENDORS 6
TERMS AND CONDITIONS 7
INSURANCE 14
PROJECT TIMELINE 15
EVALUATION CRITERIA AND SCORING 15
PROCUREMENT SCHEDULE 16
PROPOSAL SUBMISSIONS 16
RFQ EXHIBITS 22

REGULAR SESSION CITY COUNCIL MEETING PACKET FOR THE MEETING TO BE HELD ON SEPTEMBER 20, 2021

Request for Proposals

This is a formal Request for Proposal for the City of Jersey Village (here after "the City") to obtain proposals from qualified contractors for the purchase of three back up emergency generators, one at the Jersey Village Fire Station, one at the Jersey Village Police Station, and one at the Jersey Village - Village Drive Water Treatment Plant, conforming to the specifications stated in this proposal and all work necessary to complete the installation of the emergency generator at each location. (hereafter "the project"). Each Submittal requires completion of all sections of this form.

Sealed packets containing the required information/documents should include 1 hard copy and 1 digital copy and will be received in the office of the City of Jersey Village, City Secretary until 2:00PM on August 24, 2021 and opened immediately in that office in the presence of the City Secretary, City of Jersey Village. The packet is to be delivered to the City Secretary, City of Jersey Village, 16327 Lakeview Drive, Jersey Village, TX 77040. Any packet received after 2:00PM on the date specified will be returned unopened.

All packets must contain the following "RFP 2021-05 – Generator Project"

Respondent's name and return address should be prominently displayed on the envelope.

The RFP specifications can be obtained online at www.jerseyvillagetx.com.

INTRODUCTION AND PROJECT INFORMATION

The City is located in Northwest Harris County, Texas, at the corner of Beltway 8 and US 290. It has an estimated population of 8,000. The City is organized with a City Manager-Council form of government.

The City is replacing generators at the Fire Station and the Police Station, and installing a new generator at the Village Drive Water Treatment Plant.

This project is being funded through a FEMA HMGP Grant. As such the contractor selected shall be bound by all applicable sections of the Grant Terms and Conditions.

DETAILED SPECIFICATONS AND SCOPE OF WORK

Respondent understands that the scope of work includes designing, purchasing, providing/delivery, installing all components needed to install the generators as specified below.

REGULAR SESSION CITY COUNCIL MEETING PACKET FOR THE MEETING TO BE HELD ON SEPTEMBER 20, 2021

This includes all crane, rigging, electrical, plumbing, and mechanic and any and all other necessary work needed to properly install the generator according to all state and local codes. Also included is installing proper foundation for the generator, as indicated for each location below. Commissioning of equipment, training, warranty, and a service agreement shall also be included. Removal of any existing generators must be included as well. A fully functional unit upon completion of work shall be provided.

1. **Fire Station – 16501 Jersey Drive, Jersey Village, TX**
    a. **Generator Specifications**

    The existing generator shall be removed.

    A foundation exists for this generator. Any modifications to it shall be detailed in the proposal.

    Proposals must include providing backup power for this location while existing generator is removed and before the new generator is installed.

    The core requirements of this Generator include:

    - Natural Gas fired unit
    - Liquid cooled
    - 200KW 120/240 Volt, 3 Phase, 60 HZ, 800 Amp Automatic Transfer Switch, 3 Phase, 240Volt, NEMA 1 Enclosure

    b. **Other General Minimum Requirements**

    - The engine shall be natural gas, 4 cycle, radiator and liquid cooled. Two cycle engines are not acceptable.
    - Engine must be 1800 RPM
    - Control Panel/System including continuous display of the status of the engine and generator that monitors all aspects of the generator. Controller shall be capable of internet based comprehensive monitoring of the generator.
    - Tamper proof engine hour meter
    - Must be UL2200 certified
    - Voltage regulator, with over-excitation protection
    - Class H, 180°C insulation
    - 24 VDC battery charging alternator
    - Weather and Sound Proof Housing that is corrosion resistant

2. **Police Station – 16401 Lakeview Drive, Jersey Village, TX**
    a. **Generator Specifications**

    The existing generator shall be removed.

    The existing generator is currently located in an enclosed structure, and the new one shall go in the existing enclosed structure. Any modifications to the enclosed structure and/or foundation shall be detailed in the proposal.

REGULAR SESSION CITY COUNCIL MEETING PACKET FOR THE MEETING TO BE HELD ON SEPTEMBER 20, 2021

Proposals must include providing backup power for this location while existing generator is removed and before the new generator is installed.

The core requirements of this Generator include:

- Natural Gas fired unit
- Liquid cooled
- 100KW 227/480 Volt, 3 Phase, 60 HZ
- 225 Amp Automatic Transfer Switch, 3 Phase, 480Volt,
- NEMA 1 Enclosure, Non Service Entrance Rated
- Replacement of exhaust system and tubing (this generator is located in in an enclosed structure)

b. **Other General Minimum Requirements**

- The engine shall be natural gas, 4 cycle, radiator and liquid cooled. Two cycle engines are not acceptable.
- Engine must be 2915 RPM
- Control Panel/System including continuous display of the status of the engine and generator that monitors all aspects of the generator. Controller shall be capable of internet based comprehensive monitoring of the generator.
- Tamper proof engine hour meter
- Must be UL2200 certified
- Voltage regulator, with over-excitation protection
- Class H, 180°C insulation
- 12 VDC battery charging alternator
- Weather and Sound Proof Housing that is corrosion resistant

3. Village Drive Water Treatment Plant - 16600 Village Dr, Jersey Village, TX

a. Generator Specifications

There is no existing generator here. No existing foundation for the generator exists. One must be installed that is sufficient to meet the requirements necessary of the generator.

The Core requirements of this generator include:

- Diesel Generator
- 277/480 Volt, 3 Phase 600 Amp Automatic Transfer Switch, 3 Phase, 480 Volt, NEMA 3 Enclosure, Service Entrance Rated

b. **Other General Minimum Requirements**

- The engine shall be diesel, 4 cycle, radiator and liquid cooled. Two cycle engines are not acceptable.
- The fuel tank must hold enough fuel to provide for a minimum run time of 48 hours.
- Engine must be 1800 RPM
- Control Panel/System including continuous display of the status of the engine and generator that monitors all aspects of the generator. Controller shall be capable of internet based comprehensive monitoring of the generator.

REGULAR SESSION CITY COUNCIL MEETING PACKET FOR THE MEETING TO BE HELD ON SEPTEMBER 20, 2021

- Tamper proof engine hour meter
- Must be UL2200 certified
- Voltage regulator, with over-excitation protection
- Class H, 180°C insulation
- 12 VDC battery charging alternator
- Weather and Sound Proof Housing that is corrosion resistant

Selected vendor shall secure all required City permits and inspections. There shall be no costs for the permits.

This work shall be completed within 180 calendar days of the contract signing.

QUESTIONS ON RFP

All questions on this RFP must be submitted in writing to Austin Bleess, City Manager, via email to ableess@jerseyvillagetx.com no later than Thursday, August 12 at 5pm. All questions will be answered and the responses posted online at www.jerseyvillagetx.com by 5pm on August 17, 2021.

BONDS

A 5% Bid Bond is required with the bid submittal.
A 100% Performance Bond is required.
A 100% Payment Bond is required.

MINIMUM STANDARDS FOR RESPONSIBLE PROSPECTIVE VENDORS

A vendor must affirmatively demonstrate their responsibility.
A vendor must also meet the following minimum requirements:

1. Have adequate financial resources, or the ability to obtain such resources as required,
2. Be able to comply with the required or proposed delivery schedule,
3. Be able to comply with all Federal, state, and local laws, rules, regulations, ordinances and orders regarding this request,
4. Have a satisfactory record of performance,
5. Have a satisfactory record of integrity and ethics,
6. Assign only qualified personnel to perform services required under this contract, and
7. Be otherwise qualified and eligible to receive an award.

Jersey Village may request representation and other information sufficient to determine vendor's ability to meet these minimum standards listed above.

REGULAR SESSION CITY COUNCIL MEETING PACKET FOR THE MEETING TO BE HELD ON SEPTEMBER 20, 2021

TERMS AND CONDITIONS

This is a federally-funded Hazard Mitigation Grant Program (HMGP) project, provided by the State of Texas, Texas Division of Emergency Management through a Federal grant by the U.S. Department of Homeland Security, Federal Emergency Management Agency. Funding for this contract is dependent on the availability of these funds.
The provisions attached in Exhibit C – Grant Terms and Conditions apply.

Successful Vendor herein acknowledges and agrees that this contract does not create a debt or obligation against the City of Jersey Village, the State of Texas, or the Texas Division Emergency Management, or the Federal Government, and that this contract is subject to the appropriation of funds by City of Jersey Village, Texas.

Other provisions include:

CONFLICT OF INTEREST

No public official shall have interest in this contract in accordance with Vernon's Texas Codes Annotated, Local Government Code Title 5, Subtitled C, Chapter 171, including, but not limited to, Local Government Code §171.002 and §171.003.

Further, the Vendor represents and warrants that the Vendor has no actual or potential conflicts of interest in providing the deliverables required by this contract to the City. Vendor represents that the provision of services under this contract will not create an appearance of impropriety. The Vendor also represents and warrants that, during the term of this contract, the Vendor will immediately notify the City, in writing, of any potential conflict of interest that could adversely affect the City creating the appearance of a conflict of interest.

The Vendor represents and warrants that neither the Vendor nor any person or entity that will participate financially in this contract has received compensation from the City, or any agency of the State of Texas for participation in the preparation of specifications for this contract. The Vendor represents and warrants that he has not given, offered to give, and does not intend to give at any time hereafter, any economic opportunity, future employment, gift, loan, gratuity, special discount, trip, favor or service to any public servant in connection with this contract.

DISCLOSURE REQUIREMENTS

All prospective vendors shall complete the conflict of interest questionnaire and submit it with their proposal in accordance with Local Government Code §176.004. (The Texas Legislature passed House Bill 914 during the 2005 Legislative Session which requires the conflict of interest questionnaire to be completed. This can be referenced under Local Government Code, Chapter 176. Disclosure of Certain Relationships with Local Government Officers; Providing Public Access to Certain Information.)

REGULAR SESSION CITY COUNCIL MEETING PACKET FOR THE MEETING TO BE HELD ON SEPTEMBER 20, 2021

ETHICS

The vendor shall not accept or offer gifts or anything of value nor enter into any business arrangement with any employee, official or agent of the City of Jersey Village.

INSURANCE/BOND

If selected, Vendor is required to submit proof of insurance. Professional insurance (liability or other appropriate product) is required from an insurer qualified to do business in Texas. Respondents shall submit a certificate of insurance evidencing such coverage

CHANGE ORDERS

No oral statement of any person shall modify or otherwise change, or affect the terms, conditions or specifications stated in the resulting contract. All change orders to the contract must be made in writing and signed by both parties.

TERMINATION OF CONTRACT

This contract shall remain in effect until: 1) contract expires, 2) delivery/completion and acceptance of products and / or services ordered or 3) terminated by either party with thirty (30) days written notice prior to any cancellation. The successful vendor must state therein the reasons for such cancellation. In the event the contract is cancelled, the City reserves the right to award to the next best proposal, as it deems to be in the best interest of the City.

TERMINATION FOR DEFAULT

Jersey Village reserves the right to enforce the performance of this contract in any manner prescribed by law or deemed to be in the best interest of the City in the event of breach or default of this contract. Non-Performance of the vendor shall be a basis for termination of the contract by the City. Jersey Village reserves the right to terminate the contract immediately in the event the successful vendor fails to: 1) meet delivery or completion schedules, or 2) otherwise perform in accordance with these specifications. Breach of contract or default authorizes the City to award the proposal to another vendor, purchase elsewhere and charge the full increase in cost and handling to the defaulting successful vendor. The City shall not pay for any commodities / services that are unsatisfactory. Vendors will be given a reasonable opportunity before termination to correct the deficiencies. This, however, shall in no way be construed as negating the basis for termination for non-performance.

FORCE MAJURE

Neither party shall be responsible for delays caused by "Acts of God", non-city governmental processes, national emergency or any other causes beyond their reasonable control. Upon the discovery of such an event, the affected party shall notify the other and arrange a meeting to propose a program for a solution to the problem, and if necessary, to establish an estimated period of time of suspension or extension of the work.

COMPLIANCE WITH LAWS

The successful vendor shall comply with all applicable Federal, state and local laws and regulations.

REGULAR SESSION CITY COUNCIL MEETING PACKET FOR THE MEETING TO BE HELD ON SEPTEMBER 20, 2021

EQUAL EMPLOYMENT OPPORTUNITY

The successful vendor will not discriminate against any employee or applicant for employment because of race, color, religion, sex or national origin. The Vendor will take affirmative action to ensure that applicants are employed, and the employees are treated during employment without regard to their race, color, religion, sex or national origin. Such action shall include, but not be limited to the following: Employment, upgrading, demotion, or transfer; recruitment or recruitment advertising; layoff or termination; rates of pay or other forms of compensation; and selection for training, including apprenticeship. The Vendor agrees to post in conspicuous places, available to employees and applicants for employment, notices to be provided setting forth the provisions of this nondiscrimination clause.

The Vendor will, in all solicitations or advertisements for employees placed by or on behalf of the Vendor, state that all qualified applicants will receive consideration for employment without regard to race, color, religion, sex or national origin.

The Vendor will comply with all provisions of Executive Order 11246 of September 24, 1965, and of the rules, regulations and relevant orders of the Secretary of Labor.

In the event of the Vendor's noncompliance with the nondiscrimination clauses of this contract or with any of the said rules, regulations, or orders, this contract may be canceled, terminated or suspended in whole or in part and the contractor may be declared ineligible for further Government contracts or Federally assisted construction contracts in accordance with procedures authorized in Executive Order 11246 of September 24, 1965, and such other sanctions may be imposed and remedies invoked as provided in Executive Order 11246 of September 24, 1965, or by the rule, regulation, or order of the Secretary of Labor, or as otherwise provided by law.

CONTRACTING WITH SMALL AND MINORITY BUSINESSES, WOMEN'S BUSINESS ENTERPRISES. AND LABOR SURPLUS AREA FIRMS

The Vendor must take all necessary affirmative steps to assure that minority businesses, women's business enterprises, and labor surplus area firms are used when possible. Affirmative steps must include:

- Placing qualified small and minority businesses and women's business enterprises on solicitation lists;
- Assuring that small and minority businesses, and women's business enterprises are solicited whenever they are potential sources;
- Dividing total requirements, when economically feasible, into smaller tasks or quantities to permit maximum participation by small and minority businesses, and women's business enterprises;
- Using the services and assistance, as appropriate, of such organizations as the Small Business Administration and the Minority Business Development Agency of the Department of Commerce; and
- If subcontracts are to be let, to take the affirmative steps listed in above paragraphs.

DAVIS-BACON ACT

REGULAR SESSION CITY COUNCIL MEETING PACKET FOR THE MEETING TO BE HELD ON SEPTEMBER 20, 2021

Davis-Bacon Act, as amended (40 U.S.C. 3141-3148). When required by Federal program legislation, all prime construction contracts in excess of $2,000 awarded by non-Federal entities must include a provision for compliance with the Davis-Bacon Act (40 U.S.C. 3141-3144, and 31463148) as supplemented by Department of Labor regulations (29 CFR Part 5, "Labor Standards Provisions Applicable to Contracts Covering Federally Financed and Assisted Construction"). In accordance with the statute, contractors must be required to pay wages to laborers and mechanics at a rate not less than the prevailing wages specified in a wage determination made by the Secretary of Labor. In addition, contractors must be required to pay wages not less than once a week. The non-Federal entity must place a copy of the current prevailing wage determination issued by the Department of Labor in each solicitation. The decision to award a contract or subcontract must be conditioned upon the acceptance of the wage determination. The non-Federal entity must report all suspected or reported violations to the Federal awarding agency.

COPELAND "ANTI-KICKBACK" ACT

The Vendor must comply with the Copeland "Anti- Kickback" Act (40 U.S.C. 3145), as supplemented by Department of Labor regulations (29 CFR Part 3, "Contractors and Subcontractors on Public Building or Public Work Financed in Whole or in Part by Loans or Grants from the United States"). The Act provides that each contractor or sub recipient is prohibited from inducing, by any means, any person employed in the construction, completion, or repair of public work, to give up any part of the compensation to which he or she is otherwise entitled. The Vendor must report all suspected or reported violations.

CONTRACT WORK HOURS AND SAFETY STANDARDS ACT

The Vendor must comply with the Contract Work Hours and Safety Standards Act (40 U.S.C. 3701-3708). All contracts awarded in excess of $100,000 that involve the employment of mechanics or laborers must include a provision for compliance with 40 U.S.C. 3702 and 3704, as supplemented by Department of Labor regulations (29 CFR Part 5). Under 40 U.S.C. 3702 of the Act, each contractor must be required to compute the wages of every mechanic and laborer on the basis of a standard work week of 40 hours. Work in excess of the standard work week is permissible provided that the worker is compensated at a rate of not less than one and a half times the basic rate of pay for all hours worked in excess of 40 hours in the work week. The requirements of 40 U.S.C. 3704 are applicable to construction work and provide that no laborer or mechanic must be required to work in surroundings or under working conditions which are unsanitary, hazardous or dangerous. These requirements do not apply to the purchases of supplies or materials or articles ordinarily available on the open market, or contracts for transportation or transmission of intelligence.

DRUG FREE WORKPLACE

During the performance of this contract, the Vendor agrees to (i) provide a drug-free workplace for the Vendor's employees; (ii) post in conspicuous places, available to employees and applicants for employment, a statement notifying employees that the unlawful manufacture, sale, distribution, dispensation, possession, or use of a controlled substance or marijuana is prohibited in the Vendor's workplace and specifying the actions that will be taken against

REGULAR SESSION CITY COUNCIL MEETING PACKET FOR THE MEETING TO BE HELD ON SEPTEMBER 20, 2021

employees for violations of such prohibition; (iii) state in all solicitations or advertisements for employees placed by or on behalf of the Vendor that the Vendor maintains a drug-free workplace; and (iv) include the provisions of the foregoing clauses in every subcontract or purchase order of over $10,000, so that the provisions will be binding upon each subcontractor or vendor. For the purposes of this section, "drug-free workplace" means a site for the performance of work done in connection with a specific contract awarded to a Vendor, the employees of whom are prohibited from engaging in the unlawful manufacture, sale, distribution, dispensation, possession or use of any controlled substance or marijuana during the performance of the contract.

CLEAN AIR ACT

The contractor agrees to comply with all applicable standards, orders or regulations issued pursuant to the Clean Air Act, as amended, 42 U.S.C. § 7401 et seq.

The contractor agrees to report each violation to the (name of the state agency or local or Indian tribal government) and understands and agrees that the (name of the state agency or local or Indian tribal government) will, in turn, report each violation as required to assure notification to the (name of recipient), Federal Emergency Management Agency, and the appropriate Environmental Protection Agency Regional Office.

The contractor agrees to include these requirements in each subcontract exceeding $100,000 financed in whole or in part with Federal assistance provided by FEMA.

Federal Water Pollution Control Act

The contractor agrees to comply with all applicable standards, orders or regulations issued pursuant to the Federal Water Pollution Control Act, as amended, 33 U.S.C. 1251 et seq.

The contractor agrees to report each violation to the (name of the state agency or local or Indian tribal government) and understands and agrees that the (name of the state agency or local or Indian tribal government) will, in turn, report each violation as required to assure notification to the (name of recipient), Federal Emergency Management Agency, and the appropriate Environmental Protection Agency Regional Office.

The contractor agrees to include these requirements in each subcontract exceeding $100,000 financed in whole or in part with Federal assistance provided by FEMA.

DEBARMENT AND SUSPENSION

Debarment and Suspension (Executive Orders 12549 and 12689)—A contract award (see 2 CFR 180.220) must not be made to parties listed on the government wide exclusions in the System for Award Management (SAM), in accordance with the OMB guidelines 2 CFR 180 that implement Executive Orders 12549 (3 CFR part 1986 Comp., p. 189) and 12689 (3 CFR part 1989 Comp., p. 235),"Debarment and Suspension." SAM Exclusions contains the names of parties debarred, suspended, or otherwise excluded by agencies, as well as parties declared ineligible under statutory or regulatory authority other than Executive Order 12549.

REGULAR SESSION CITY COUNCIL MEETING PACKET FOR THE MEETING TO BE HELD ON SEPTEMBER 20, 2021

BYRD ANTI-LOBBYING AMENDMENT

Byrd Anti-Lobbying Amendment (31 U.S.C. 1352)—Contractors that apply or bid for an award exceeding $100,000 must file the required certification. Each tier certifies to the tier above that it will not and has not used Federal appropriated funds to pay any person or organization for influencing or attempting to influence an officer or employee of any agency, a member of Congress, officer or employee of Congress, or an employee of a member of Congress in connection with obtaining any Federal contract, grant or any other award covered by 31 U.S.C. 1352. Each tier must also disclose any lobbying with non-Federal funds that takes place in connection with obtaining any Federal award. Such disclosures are forwarded from tier to tier up to the non-Federal award.

Procurement of Recovered Materials

In the performance of this contract, the Contractor shall make maximum use of products containing recovered materials that are EPA designated items unless the product cannot be acquired—

1. Competitively within a timeframe providing for compliance with the contract performance schedule;
2. Meeting contract performance requirements; or
3. At a reasonable price.

Information about this requirement is available at EPA's Comprehensive Procurement Guidelines web site, http://www.epa.gov/cpg/. The list of EPA-designate items is available at http://www.epa.gov/cpg/products.htm

PUBLIC INFORMATION ACT

The Vendor acknowledges and agrees that all documents, in any media, generated in the performance of work conducted under this contract are subject to public disclosure under the Public Information Act, Government Code, Chapter 552. The Vendor shall produce all documents upon request of the City within two (2) business days when the documents are required to comply with a request for information under the Public Information Act.

ACCURATE AND TIMELY RECORD KEEPING

The Vendor warrants and represents that he will keep timely, accurate and honest books and record relating to the work performed and the payments received under this contract according to generally accepted accounting standards. Further, the Vendor agrees that he will create such books and records at or about the time the transaction reflected in the books and records occurs.

Use of DHS Seal, Logo, and Flags

Contractor shall not use the DHS seal(s), logos, crests, or reproductions of flags or likeness of DHS agency officials without specific FEMA pre-approval.

RIGHT TO AUDIT

REGULAR SESSION CITY COUNCIL MEETING PACKET FOR THE MEETING TO BE HELD ON SEPTEMBER 20, 2021

The Vendor and its subcontractors shall maintain all financial accounting documents and records, including copies of all invoices and receipts for expenditures, relating to the work under this contract. The Vendor shall make such documents and records available for examination and audit by the City or any other authorized entity of the State of Texas. The Vendor's financial accounting documents and records shall be kept and maintained in accordance with generally accepted accounting principles and for a minimum of seven years following the completion of the Vendor. By executing this contract, the Vendor accepts the authority of the Texas State Auditor's Office to conduct audits and investigations in connection with all state funds received pursuant to this contract. The Vendor shall comply with directives from the Texas State Auditor and shall cooperate in any such investigation or audit. The Vendor agrees to provide the Texas State Auditor with access to any information the Texas State Auditor considers relevant to the investigation or audit. The contactor also agrees to include a provision in any subcontract related to this contract that requires the subcontractor to submit to audits and investigation by the State Auditor's Office in connection with all state funds received pursuant to the subcontract.
The Vendor shall make such documents and records available for examination and audit by the Federal government and records shall be kept and maintained in accordance with generally accepted accounting principles and for a minimum of seven years following the submission of the final Federal Financial Report.

INVOICING

Invoices shall be sent directly to the City of Jersey Village. Payments will be processed within thirty (30) days after receipt of invoice or items, whichever is later. Invoices must show tasks that were performed, time period the work was performed, the percent and cost of each task completed.

PAYMENT

Payment shall be made by check or ACH Transfer from the City upon satisfactory completion and acceptance of items and submission of a valid invoice. Payments shall be made in accordance with the State of Texas Prompt Payment Act, Vernon's Texas Codes Annotated, Government Code Title 10, Subtitled F, Chapter 2251. Successful vendor is required to pay subcontractors within ten (10) days after the successful vendor receives payment from the City.

VENUE

This agreement will be governed and construed according to the laws of the State of Texas. This agreement is performable in Jersey Village, Texas.

ASSIGNMENT OF CONTRACT

The successful vendor shall not assign, sell, transfer, subcontract, or convey this contract, in whole or in part, without the prior written consent of the City of Jersey Village City Council.

SILENCE OF SPECIFICATIONS

The apparent silence of these specifications as to any detail, or the apparent omission from it of a detailed description concerning any point, shall be regarded as meaning that only the best

REGULAR SESSION CITY COUNCIL MEETING PACKET FOR THE MEETING TO BE HELD ON SEPTEMBER 20, 2021

commercial practices are to prevail and that only material and workmanship of the finest quality are to be used. All interpretations of these specifications shall be made on the basis of this statement

HOLD HARMLESS AGREEMENT

Vendor shall indemnify and hold City of Jersey Village harmless from all claims for personal injury, death and / or property damage arising from any cause whatsoever, resulting directly or indirectly from contractor's performance. Contractor shall procure and maintain, with respect to the subject matter of this proposal, appropriate insurance coverage including, as a minimum, public liability and property damage with adequate limits to cover contractor's liability as may arise directly or indirectly from work performed under terms of this proposal. Certification of such coverage must be provided to the City upon request.

WAIVER OF SUBROGATION

By virtue of acceptance of this contract, both contractor and insurance carrier waive any and all rights whatsoever with regard to subrogation against Jersey Village as an indirect party to any suit arising out of personal or property damages, resulting from contractor's performance under this agreement.

INSURANCE

The Contractor shall not commence work under this contract until all required insurance under this paragraph has been secured and approved by the City.

(a) Worker's Compensation Insurance: The Contractor shall procure and shall maintain during the life of this contract Worker's Compensation Insurance as required by the State of Texas for all of his employees to be engaged in work at the site of the project under this contract and, in case of any such work sublet, the Contractor shall require the subcontractor similarly to provide Worker's Compensation Insurance for all of the employees to be engaged in such work unless such employees are covered by the protection afforded by the Contractor's Worker's Compensation Insurance.

(b) Contractor's Public Liability and Property Damage Insurance and Vehicle Liability Insurance. The Contractor shall procure and shall maintain during the life of this contract Contractor's Public Liability Insurance, Contractor's Property Damage Insurance and Vehicle Liability Insurance in the following amounts:

(1) Bodily Injury $300,000 Each Occurrence and $600,000 Annual Aggregate, Products and Completed Operations
(2) Property Damage $300,000 Each Occurrence and $600,000 Annual Aggregate
(3) Property Damage liability insurance will provide Explosion, Collapse and Underground coverages. $300,000 Each Occurrence and $600,000 Annual Aggregate
(4) Personal Injury, with employment exclusion. deleted $300,000 Each Occurrence
(5) Fire Damage, Legal Liability $50,000 Any One Fire
(6) Medical Expenses $5,000 Any One Person

REGULAR SESSION CITY COUNCIL MEETING PACKET FOR THE MEETING TO BE HELD ON SEPTEMBER 20, 2021

Comprehensive Automobile Liability.
To include all owned, non-owned and hired coverages.

(1) Bodily Injury $100,000 Each Person and $300,000 Each Accident
(2) Property Damage $100,000 Each occurrence Umbrella Liability Insurance - $1,000,000
(3) The Owner shall be named an additional insured on the Contractor's policy as to the subject job.
(4) This policy shall provide coverage over the workmen's compensation, comprehensive general liability and automobile liability.

Owner's Protective Liability

(1) Naming the Owner as insured with the following limits:
(a) $1,000,000.00 per occurrence as primary limit. Combined single limit, irrespective of whether occurrence consists of personal injury, death, property damage or combination thereof.
(2) Covering the work to be performed for Owner by the Contractor and its subcontractor, if any.
(3) The definition of insured in the policy shall be endorsed to include officials and employees of the Owner, with respect to the work performed by the Contractor.
(4) Written with same company as C.G.L. policy.
(5) The architects and engineers shall be additional insured, but only will have excess coverage. The full policy limits will protect the Owner if needed and only the excess will protect the architects and engineers.
(6) The original policy shall be placed on file with the Owner.

The Contractual Liability required by the General Conditions shall provide coverage for not less than the following amounts:

(1) Bodily Injury: $300,000 Each Person and $600,000 Each Occurrence
(2) Property Damage: $300,000 Each Occurrence and $600.000 Annual Aggregate

PROJECT TIMELINE

All items listed in the scope of work shall be completed within 180 calendar days from the contract signing date.

EVALUATION CRITERIA AND SCORING

The following criteria will be used by The City to evaluate the Respondents ability to perform the requested work. The City may award the Task Order to the best qualified Respondent, taking into account the below items:

1. Proposals and specific local experience of the team, including the proposed project manager and key project staff to complete work specified in Scope of Work: **15 POINTS**
2. Firm's understanding of the Project: **10 POINTS**
3. Firm's Work Plan to complete the Project: **15 POINTS**
4. Firm's capacity to perform and deliver the Project in a timely manner: **20 POINTS**
5. Fee Proposal: **40 Points**

REGULAR SESSION CITY COUNCIL MEETING PACKET FOR THE MEETING TO BE HELD ON SEPTEMBER 20, 2021

AWARD OF TASK ORDER

The City shall review each firm's response to this RFP. Proposals shall be evaluated, and the best qualified firm shall be selected. It is anticipated the City Council will authorize award of the contract at its City Council meeting on September 20, 2021.

PROCUREMENT SCHEDULE

RFP Issued	July 28, 2021
Mandatory Pre-Proposal Meeting	August 10, 2021 at 2:00 pm
Questions Due	August 12, 2021 at 5:00 pm
RFP Submission Deadline	August 24, 2021 at 2:00 pm
Evaluation of RFP's	August 24 – September 8, 2021
Award (tentative)	September 20, 2021

A mandatory pre-proposal meeting to explain the project and answer any questions will be held on Tuesday, August 10 at 2:00 PM. Prospective Respondents should meet at the Jersey Village City Hall, in the Civic Center Conference Room at 16327 Lakeview Drive, Jersey Village, TX 77040.

The pre-proposal meeting is for information only. Any answers furnished will not be official until verified in writing by the City. Answers that change or substantially clarify the bid will be affirmed in an addendum. Access to the facilities where the work will be provided will be offered at this meeting and will not be made available at any other time.

Failure to attend the meeting and sign the sign-in sheet at the pre-proposal meeting will automatically disqualify a Respondent from submitting a valid proposal. Any proposal submitted by a party not attending and signing the roster at the pre-proposal meeting will not be opened or considered.

PROPOSAL SUBMISSIONS

DEADLINE

Proposals must be received at 16327 Lakeview Drive, Jersey Village, TX 77040 prior to 2:00 pm on Tuesday, June 15, 2021. Proposals will be received and publicly acknowledged at 2:00 pm or soon thereafter. *Late proposals will not be accepted under any circumstances!*

SUBMITTAL

Completed proposal, must be in a sealed envelope clearly marked with " RFP 2021-XX – Generator Project " written in the lower left-hand corner of the envelope containing the

REGULAR SESSION CITY COUNCIL MEETING PACKET FOR THE MEETING TO BE HELD ON SEPTEMBER 20, 2021

proposal. The submittal shall include 1 hard copy and 1 digital copy on a USB Flash Drive in PDF Format.

ADDRESS

Sealed proposals may be hand-delivered or mailed to City Secretary, City of Jersey Village, 16327 Lakeview Drive, Jersey Village, Texas 77040.

METHODS

All proposals must be returned in a sealed envelope with the proposal name clearly marked on the outside. If a delivery service is used, the proposal name must be clearly marked on the outside of the delivery service, envelope. Facsimile and electronic mail transmittals are not acceptable.

WITHDRAWAL OR ALTERATIONS OF PROPOSAL

Proposals may be withdrawn at any time prior to the official opening. Alterations made before opening time must be initialed by vendor guaranteeing authenticity. Proposals submitted must be binding for not less than ninety (90) days after the date received.

NO OFFER

Please indicate on your "NO OFFER" response any area/concern that may have influenced your decision to indicate "NO OFFER."

PROPOSAL OPENING

Proposals will be received and publicly acknowledged at the location, date and time stated above. Vendors, their representatives, and interested persons may be present. The proposals shall be reviewed and acknowledged only so as to avoid disclosure of the contents to competing vendors and kept confidential during negotiations. However, all proposals shall be open for public inspection after the contract is awarded, except for trade secrets and confidential information contained in the proposal and identified by vendor as such.

TAX EXEMPT STATUS

The City is exempt from Federal Excise and State Sales Tax. Therefore, tax must not be included in this proposal.

AWARD

It is anticipated that awards will be made September 20, 2021. Proposals submitted must be binding for not less than ninety (90) days after the date received.

PROPOSAL SUBMISSION / INFORMATION FROM VENDOR

The RFP received from the vendor should include each of the following sections in the numbered order as noted below. If additional sections are needed by the vendor to highlight their services or provide additional information, such sections are to be added after the required sections.

REGULAR SESSION CITY COUNCIL MEETING PACKET FOR THE MEETING TO BE HELD ON SEPTEMBER 20, 2021

Instructions: Please answer the questions listed below. Pre-printed product literature regarding your services is acceptable but not required.

Section 1 - Vendor Information

Please include the following information:

- Vendor Identification, to include
  - Legal name of company
  - Federal ID #
  - Contact person including title
  - Telephone number for contact person
  - Email address for contact person
  - Complete mailing address
  - Complete physical address

Please indicate if this person has the binding authority to enter into contracts.

Section 2 — Solution Framework Summary

Provide an overview/compliance statement of design and layout for the proposed system. The overview must include:

- A statement confirming the generator system, generator system communications capability, accessories and control system specifications;
- a statement of methods and materials that will be used to provide natural gas service to the new generator system for the Police and Fire Stations;
- A statement of methods and materials that will be needed to install and connect the automatic transfer switches to the new generators that is compliant to all applicable codes;
- A statement of methods and materials that will be used to connect all existing loads to the new generator backup system;
- A statement that all building electrical power systems will be backed up by the new generator system at the completion of the project;
- A statement of method to assure proper exhaust ventilation. It shall be not acceptable to have fumes enter any part of the interior of the buildings.
- A statement with the breakdown of the project installation timeline;
- A proposed layout drawing showing the footprint of the generator and concrete pad for the Village Drive Water Plant Generator

Section 3 — Proposal Narrative with Task and Time Line

The City places a premium on the respondent's approach to the project and the ability to present a scope of services that will ensure successful and timely completion of the project. The narrative should be clear, concise and complete.

Include a detailed time line in the proposal; including start date and task outline.

Be clear in the proposal, what responsibilities will be assumed by the vendor and what responsibilities will be required of the City.

The Police and Fire Stations are a 24/7 operation. All work at these buildings must be coordinated with the Police Chief for the Police Station and the Fire Chief for the Fire Station, or

REGULAR SESSION CITY COUNCIL MEETING PACKET FOR THE MEETING TO BE HELD ON SEPTEMBER 20, 2021

their designees, to ensure daily operations are not compromised while the work is being completed.
If any section leaves out what you consider crucial or valuable information, please include it in your proposal.

Section 4 — Profile / History
Provide a brief history and profile of your company.
Include additional information such as:

1. When it was founded.
2. Type of legal entity (i.e. corporation, partnership, etc.).
3. Names of owners, if privately owned.
4. A Statement substantiating the resources of the proposing entity and the ability to carry out the scope of work requested within the timeline.

Section 5 - Client Base
Proposals should list client base for similar projects. Contact information should be supplied. Provide the dates for each project and whether an extension of time was requested and/or approved.
The City places a premium on the number of successful projects that the respondent has undertaken that are similar to the City's current project.

Section 6 - Resumes of Personnel Assigned to Project
Respondents must provide a listing of the personnel to be assigned to the project, including organizational structure and each person's area of responsibility. Resumes for each professional assigned to this project are also required. Vendors must have sufficient and qualified staff immediately available to contract solicitations and to enter into and manage any components targeted by the RFP.

Section 7 – Fee Proposal
The fee proposal, on the template provided as part of this RFP, shall be included. The proposal shall also include specification sheets for the generators being proposed.

Section 8 – Other Required Forms
Other forms that are required and shall be included with the proposal:

- Acknowledgement and Certification Regarding Debarment, Suspension and other Ineligibility
- Proposed Contract
- Conflict of Interest Affidavit
- Conflict of Interest Questionnaire

Exhibits
Exhibit A – General Services Contract with the City of Jersey Village for example purposes only.
Exhibit B – General Services Contract Rider with the City of Jersey Village for example purposes only.

REGULAR SESSION CITY COUNCIL MEETING PACKET FOR THE MEETING TO BE HELD ON SEPTEMBER 20, 2021

Exhibit C – Grant Terms and Conditions

LEGIBILITY

Proposals must be legible and of a quality that can be reproduced.

LATE PROPOSALS

Proposals received after submission deadline will not be opened and will be considered void and unacceptable. City of Jersey Village is not responsible for lateness of mail, courier service, etc.

DOCUMENTATION

Vendor shall provide with this proposal response, all documentation required by this proposal. Failure to provide this information may result in rejection of the proposal.

RESPONSE PREPARATION COSTS

The City will not pay any cost incurred by any vendor in the proposal preparation, printing, demonstration, or negotiation process. All costs shall be borne by the proposing vendors with exception of costs associated with any City personnel visits to vendor offices or other client sites.

SELECTION OF CONSULTANTS

The City shall review all material submitted, and if required, schedule presentations or interviews with prospective consultants in order to select the most qualified. The City is an Equal Opportunity Employer and reserve the rights to reject any and all proposals, extend the RFP deadline and to waive formalities in our selection.

AWARD CONTRACT

This Proposal, and accompanying documents, and any negotiated terms, when properly accepted by Jersey Village, shall constitute a contract equally binding between the successful vendor and City if Jersey Village. The successful vendor may be required to sign an additional agreement containing terms necessary to ensure compliance with the proposal. No different or additional terms will become part of this contract with the exception of a Change Order.

EXCEPTIONS / SUBSTITUTIONS

All proposals meeting the intent of this request for proposal will be considered for award. Vendors taking exception to the specifications, or offering substitutions, shall state these exceptions in the section provided or by attachment as part of the proposal. The absence of such a list shall indicate that the vendor has not taken exceptions and City shall hold the vendor responsible to perform in strict accordance with the specifications of the RFP. Jersey Village City Council reserves the right to accept any, all, or none of the exception(s) / substitution(s) deemed to be in the best interest of the City.

REGULAR SESSION CITY COUNCIL MEETING PACKET FOR THE MEETING TO BE HELD ON SEPTEMBER 20, 2021

REJECTION / ACCEPTANCE

It is understood that the City Council of Jersey Village, Texas, reserves the right to accept or reject any or all proposals for any or all materials and / or services covered in this proposal request. Additionally, it is understood that the City may waive discrepancies or defects in the proposal or to accept such Proposal, City shall deem to be in the best interest of Jersey Village. Receipt of any proposal shall under no circumstances obligate Jersey Village to accept the lowest dollar proposal.

ADDITIONAL INFORMATION

The City may request additional information to further clarify, explain or validate the contents of any response in this RFP. All information must be submitted to the City in writing within three (3) business days of the City's request.

CONTRACT ADMINISTRATION

Under this contract, Austin Bleess, City Manager, shall be the contract administrator with designated responsibility to ensure compliance with contract requirements, such as but not limited to, acceptance, inspection, and delivery. The contract administrator will serve as liaison between the Jersey Village City Council and the successful vendor. In order to ensure fair and objective evaluation, all questions related to this RFP should be addressed to the person named above.

NEGOTIATIONS

City of Jersey Village reserves the right to negotiate the contract in accordance with Local Government Code §262 for requests for proposals.

CONTRACT AWARD

The award of this contract shall be made to the responsible vendor whose proposal is determined to be the best evaluated vendor resulting from negotiation, taking into consideration the relative importance of price and the other evaluation factors set forth in the request for proposals.

ADDENDA

Acknowledgement of the addenda, if any were issued to change the original RFP as a result of questions or other reason, must be included.

REGULAR SESSION CITY COUNCIL MEETING PACKET FOR THE MEETING TO BE HELD ON SEPTEMBER 20, 2021

RFQ EXHIBITS

The following exhibits are offered as part of this RFQ:

Exhibit A – General Services Contract with the City of Jersey Village for example purposes only.
Exhibit B – General Services Contract Rider with the City of Jersey Village for example purposes only.
Exhibit C – Grant Terms and Conditions
Exhibit D - Jersey Village RFP – Generator Project Fee Proposal Form
Exhibit E – Conflict of Interest Disclosure Statement
Exhibit F - Certification Regarding Ineligible Contractors
Exhibit G - Certification Regarding Use Of Contract Funds For Lobbying
Exhibit H – Conflict of Interest Questionnaire

REGULAR SESSION CITY COUNCIL MEETING PACKET FOR THE MEETING TO BE HELD ON SEPTEMBER 20, 2021

Exhibit A - GENERAL SERVICES CONTRACT

This General Services Contract (the "Contract") is made by and between the City of Jersey Village, a State of Texas home rule municipal corporation (the "City"), and _____ _____ (the "Contractor") (with each being a "Party", and together, the "Parties"), and shall be in full force and effect on the date of execution by the authorized representatives of the Parties below (the "Effective Date").

SECTION 1. Summary of the Services.

Description of Services:

Annual/Base Services:

Work in addition to Base Services:

Effective Date: _____

Termination Date: _____

SECTION 2. Services and Payment.

Contractor will furnish the Services to the City in accordance with the terms and conditions specified in this Contract. The Contractor will bill the City for the Services provided at intervals of at least thirty (30) days, except for the final billing. The City shall pay the Contractor for the Services in accordance with the terms of this Contract, but all payments to be made by the City to Contractor, including the time of payment and the payment of interest on overdue amounts, are subject to the applicable provisions of Chapter 2251 of the Government Code.

SECTION 3. Termination for Convenience.

The City may terminate this Contract during at any time for the City's own convenience, where the Contractor is not in default, by giving written notice to Contractor. If the City terminated this Contract under this paragraph, then the City will pay the Contractor for the portion of the Services rendered in accordance with this Contract up to the date of termination.

REGULAR SESSION CITY COUNCIL MEETING PACKET FOR THE MEETING TO BE HELD ON SEPTEMBER 20, 2021

SECTION 4. Termination for Default.
Either Party may terminate this Contract as provided in this paragraph if the other Party is in default to any term of this Contract. The Party alleging the default will give the other Party notice of the default in writing citing the terms of the Contract that have been breached and what action the defaulting Party must take to cure the default. If the Party in default fails to cure the default as specified in the notice within thirty (30) days, then the Party giving the notice of the default may terminate this Contract by written notice to the other Party, specifying the date of termination. Termination of the Contract under this paragraph does not affect the right of either Party to seek remedies for breach of the Contract as allowed by law, including any damages or costs suffered by either Party.

SECTION 5. Multi-Year Contracts and Funding.
If this Contract extends beyond the City's fiscal year in which it becomes effective, or provides for the City to make any payment during any of the City's fiscal years following the City's fiscal year in which this Contract becomes effective, and the City fails to appropriate funds to make any required Contract payment for that successive fiscal year, and there are no funds from the City's sale of debt instruments to make the required payment, then this Contract automatically terminates at the beginning of the first (1st) day of the City's successive fiscal year of the Contract for which the City has not appropriated funds or otherwise provided for funds to make a required payment under this Contract.

SECTION 6. Liability and Indemnity.
TO THE EXTENT ALLOWED BY LAW, ANY PROVISION OF ANY ATTACHED DOCUMENT THAT IS MADE A PART OF THIS CONTRACT THAT LIMITS THE CONTRACTOR'S LIABILITY TO THE CITY OR RELEASES THE CONTRACTOR FROM LIABILITY TO THE CITY FOR ACTUAL OR COMPENSATORY DAMAGES, LOSS, OR COSTS ARISING FROM THE PERFORMANCE OF THIS CONTRACT, OR THAT PROVIDES FOR CONTRACTUAL INDEMNITY OF EITHER PARTY, IS NOT APPLICABLE OR EFFECTIVE UNDER THIS CONTRACT. EXCEPT WHERE ANY ATTACHED DOCUMENT THAT IS MADE A PART OF THIS CONTRACT PROVIDED BY THE CITY PROVIDES OTHERWISE, EACH PARTY IS RESPONSIBLE FOR DEFENDING AGAINST, AND LIABLE FOR, PAYING ANY CLAIM, SUIT, OR JUDGMENT FOR DAMAGES, LOSS, OR COSTS ARISING FROM THAT PARTY'S NEGLIGENT ACTS OR OMISSIONS IN THE PERFORMANCE OF THIS CONTRACT IN ACCORDANCE WITH APPLICABLE LAW. THIS PROVISION DOES NOT AFFECT THE RIGHT OF EITHER PARTY WHO IS SUED BY A THIRD PARTY OF ACTS OR OMISSIONS ARISING FROM THIS CONTRACT TO BRING IN THE OTHER PARTY AS A THIRD-PARTY DEFENDANT AS ALLOWED BY LAW.

SECTION 7. Assignment.
The Contractor shall not assign this Contract without the prior written consent of the City.

SECTION 8. Law Governing and Venue.
This Contract is governed by the law of the State of Texas and a lawsuit may only be prosecuted on this Contract in a court of competent jurisdiction located in, or having jurisdiction in, Harris County, Texas.

SECTION 9. Entire Contract.
This Contract represents the entire Contract between the Parties and supersedes all prior negotiations, representations, or contracts, either written or oral. This Contract may be amended only by written instrument signed by the Parties.

REGULAR SESSION CITY COUNCIL MEETING PACKET FOR THE MEETING TO BE HELD ON SEPTEMBER 20, 2021

SECTION 10. Independent Contractor.
The Contractor shall perform the work under this Contract as an independent contractor and not as an employee of the City. The City has no right to supervise, direct, or control the Contractor or the Contractor's officers or employees in the means, methods, or details of the Services The Parties agree that the work performed under this Contract is not inherently dangerous, that the Contractor will perform the work in a workmanlike manner, and that the Contractor will take proper care and precautions to insure the safety of the Contractor's officers and employees.

SECTION 11. Dispute Resolution Procedures.
The Parties desire an expeditious means to resolve any disputes that may arise between them regarding this Contract. If either Party disputes any matter relating to this Contract, then the Parties agree to try in good faith, before bringing any legal action, to settle the dispute by submitting the matter to mediation before a third party who will be selected by agreement of the Parties. The Parties will each pay one-half (½) of the mediator's fees.

SECTION 12. Attorney's Fees.
Should the City bring suit against the Contractor for breach of contract or for any other cause relating to this Contract, then the City shall be entitled to seek an award of attorney's fees or other costs relating to the suit.

SECTION 13. Severability.
If a court finds or rules that any part of this Contract is invalid or unlawful, then the remainder of this Contract continues to be binding on the Parties.

SECTION 14. Work Product.
Any work product generated as a result of this Contract shall be the property of the City.

SECTION 15. Compliance with SWMP.
The Contractor acknowledges that it is aware of the Storm Water Management Program (the "SWMP") developed by the City in compliance with the Texas Pollutant Discharge Elimination System General Permit No. TXR040000 (the "General Permit) issued by the Texas Commission on Environmental Quality. For all maintenance and construction activities, such as but not limited to, mowing, painting, general upkeep, and other maintenance-related activities on City-owned facilities which include buildings, amenities, parks, golf courses, detention ponds, and City-owned and operated public infrastructure such as water distribution, treatment, wastewater collection, and storm sewer systems, the Contractor will comply with all SWMP requirements. The Contractor agrees to comply with all applicable stormwater control measures, good housekeeping practices, and facility-specific stormwater management operating procedures described in Part II, Section B.5.(b)(2)-(6) of the General Permit, a copy of which is on file with the City. These procedures include: i) informing or training appropriate employees in implementing pollution prevention and good housekeeping practices; ii) waste disposal removed in accordance with 30 TAC Chapters 330 and 335; iii) identifying pollutants of concern that could be discharged from operation and maintenance activities and, if needed, developing and implementing pollution prevention measures to reduce these potential pollutants; iv) performing visual inspection of pollution prevention measures, as applicable; and, v) maintaining structural controls during the Contractor's work, as warranted.

REGULAR SESSION CITY COUNCIL MEETING PACKET FOR THE MEETING TO BE HELD ON SEPTEMBER 20, 2021

SECTION 16. Disclosure of Interested Parties.
As required by Section 2252.908, Texas Government Code, if this Contract requires an action or vote by the City before the Contract may be signed, or has a value of at least one million dollars ($1,000,000), then the City may not enter into such Contract unless the Contractor submits a disclosure of interested parties to the City at the time the Contractor submits the signed Contract to the City. The Contractor agrees to submit such disclosure as required by Section 2252.908 of the Texas Government Code on the form 1295, prescribed by the Texas Ethics Commission, unless the Contractor is a publicly traded entity or a wholly owned subsidiary of same, in which case no disclosure is required. The Contractor agrees to access the Texas Ethics Commission website and complete the form 1295, receive a confirmation number and a PDF version of the completed form 1295, execute and notarize a hard copy version of the completed form 1295, and submit it, along with the confirmation number, to the City.

SECTION 17. No Boycott of Israel.
As required by Chapter 2270, Texas Government Code, the Contractor hereby verifies that it does not boycott Israel and will not boycott Israel through the term of this Contract. For purposes of this verification, "Boycott Israel" means refusing to deal with, terminating business activities with, or otherwise taking any action that is intended to penalize, inflict economic harm on, or limit commercial relations specifically with Israel, or with a person or entity doing business in Israel or in an Israeli controlled territory, but does not include an action made for ordinary business purposes. This Section 16 applies only to contracts with a value of one hundred thousand dollars ($100,000) or more that are to be paid wholly or partly from public funds of the City, between the City and any company with ten (10) or more full time employees. Furthermore, this Section 16 does not apply if the Contractor is a sole proprietorship

SECTION 18. No Business with Foreign Terrorist Organization.
Pursuant to Chapter 2252, Texas Government Code, the Contractor represents and certifies that, at the time of execution of this Contract, neither the Contractor, nor any wholly owned subsidiary, majority-owned subsidiary, parent company, or affiliate of the same: (i) engages in business with Iran, Sudan, or any foreign terrorist organization as described in Chapter 806 or 807 of the Texas Government Code, or Subchapter F of Chapter 2252 of the Texas Government Code; or, (ii) is a company listed by the Texas Comptroller of Public Accounts under Sections 806.051, 807.051, or 2252.153 of the Texas Government Code. The term "foreign terrorist organization" in this paragraph has the meaning assigned by Section 2252.151 of the Texas Government Code.

SECTION 19. Additional Contract Documents.
The following specified documents attached to this Contract are hereby made a part of this Contract. Any provision contained in any of the Contractor's Additional Contract Documents specified below that conflicts with this Contract or the General Services Contract Rider (the "Rider") is not applicable, and the terms of this Contract and the Rider shall govern.

A. Contractor's Additional Contract Documents:

- Proposal;
- Official Bid Submittal Packet (if applicable);
- Other: _____
- _____

REGULAR SESSION CITY COUNCIL MEETING PACKET FOR THE MEETING TO BE HELD ON SEPTEMBER 20, 2021

B. City's Additional Contract Documents:

- General Services Contract Rider;
- Other: _____
- _____
- _____

SIGNATURES

For: CITY

_____
Name [Signature]

_____
Name [Printed]

_____ _____
Title **Date**

For: CONTRACTOR

_____
Name [Signature]

_____
Name [Printed]

_____ _____
Title **Date**

REGULAR SESSION CITY COUNCIL MEETING PACKET FOR THE MEETING TO BE HELD ON SEPTEMBER 20, 2021

EXHIBIT B - CITY OF JERSEY VILLAGE – GENERAL SERVICES CONTRACT RIDER

SECTION 1. Application.

This General Services Contract Rider applies to, is a part of, and takes precedence over any conflicting provision in or attachment to the Contract (the "Contract") between the City of Jersey Village, Texas (the "City") and _____ (the "Vendor") (with the City and the Vendor being the "Parties", and each a "Party"), which is attached and described as follows:

_____

_____

_____

SECTION 2. Payment Provisions.

The City's payments under the Contract, including the time of payment and the payment of interest on overdue amounts, are subject to Chapter 2251, Texas Government Code.

SECTION 3. Multiyear Contracts.

If the City Council of the City (the "Council") does not appropriate funds to make any payment for a fiscal year after the City's fiscal year in which the Contract becomes effective, and there are no proceeds available for payment from the sale of bonds or other debt instruments, then the Contract automatically terminates at the beginning of the first (1st) day of the successive fiscal year. (Section 5, Article XI, Texas Constitution)

SECTION 4. Liability and Indemnity.

Any provision of the Contract is void and unenforceable if it: (i) limits or releases either party from liability that would exist by law in the absence of the provision; (ii) creates liability for either Party that would not exist by law in the absence of the provision; or, (iii) waives or limits either Party's rights, defenses, remedies, or immunities that would exist by law in the absence of the provision. (Section 5, Article XI, Texas Constitution)

SECTION 5. Confidentiality.

Any provision in the Contract that attempts to prevent the City's disclosure of information that is subject to public disclosure under Federal or Texas law, applicable regulation, or court or administrative decision or ruling, is invalid. (Chapter 552, Texas Government Code)

SECTION 6. Tax Exemption.

The City is not liable to the Vendor for any Federal, State, or local taxes for which the City is not liable by law, including State and local sales and use taxes (Section 151.309 and Title 3, Texas Tax Code) and Federal excise tax (Subtitle D of the Internal Revenue Code). Accordingly, those taxes may not be added to any item.

SECTION 7. Contractual Limitations Period.

Any limitations period in the Contract that does not run against the City by law or that is shorter

REGULAR SESSION CITY COUNCIL MEETING PACKET FOR THE MEETING TO BE HELD ON SEPTEMBER 20, 2021

than two (2) years is void. (Sections 16.061 and 16.070, Texas Civil Practice and Remedies Code)

SECTION 8. Governing Law and Venue.
Texas law governs the Contract and any lawsuit on the Contract must be filed in a court that has jurisdiction in Harris County, Texas.

SECTION 9. Special Conditions.
A. As required by Section 2252.908, Texas Government Code, if the Contract requires an action or vote by the Council before the Contract may be signed, or has a value of at least one million dollars ($1,000,000), then the City may not enter into the Contract unless the Vendor submits a disclosure of interested parties to the City at the time the Vendor submits the signed Contract to the City. The Vendor agrees to submit such disclosure as required by Section 2252.908 of the Texas Government Code on the form 1295, prescribed by the Texas Ethics Commission, unless the Vendor is a publicly traded entity or a wholly owned subsidiary of same, in which case no disclosure is required.

B. As required by Chapter 2270, Texas Government Code, the Vendor hereby verifies that it does not boycott Israel and will not boycott Israel through the term of the Contract. For purposes of this verification, "Boycott Israel" means refusing to deal with, terminating business activities with, or otherwise taking any action that is intended to penalize, inflict economic harm on, or limit commercial relations specifically with Israel, or with a person or entity doing business in Israel or in an Israeli controlled territory, but does not include an action made for ordinary business purposes. This Section 9B applies only to contracts with a value of one hundred thousand dollars ($100,000) or more that are to be paid wholly or partly from public funds of the City, between the City and any company with ten (10) or more full time employees.

C. As required by Chapter 2252, Texas Government Code, the Vendor certifies that, at the time of execution of the Contract neither the Vendor, nor any wholly owned subsidiary, majority-owned subsidiary, parent company or affiliate of the same: (i) engages in business with Iran, Sudan, or any foreign terrorist organization as described in Chapter 806 or 807 of the Texas Government Code, or Subchapter F of Chapter 2252 of the Texas Government Code; or, (ii) is a company listed by the Texas Comptroller of Public Accounts under Sections 806.051, 807.051, or 2252.153 of the Texas Government Code. The term "foreign terrorist organization" in this paragraph has the meaning assigned to such term in Section 2252.151 of the Texas Government Code.

FOR THE CITY OF JERSEY VILLAGE:	**FOR THE VENDOR:**
Name [Signature]	**Name [Signature]**
Name [Printed]	**Name [Printed]**
Date	**Date**

REGULAR SESSION CITY COUNCIL MEETING PACKET FOR THE MEETING TO BE HELD ON SEPTEMBER 20, 2021

GRANT TERMS AND CONDITIONS

This Grant Agreement (consisting of these terms and conditions and all exhibits) is made and entered into by and between the Texas Division of Emergency Management (TDEM), an agency of the State of Texas, hereinafter referred to as "TDEM," and the grant recipient, **CITY OF JERSEY VILLAGE**, hereinafter referred to as the "Subrecipient." Furthermore, TDEM and the Subrecipient are collectively hereinafter referred to as the "Parties." All subawards made under this grant agreement are subject to the same terms and conditions below.

Subrecipient may not assign or transfer any interest in this Grant without the express, prior written consent of TDEM and DHS/FEMA.

a. The term Recipient and pass-through entity have the same meaning as "Grantee," as used in governing statutes, regulations, and DHS/FEMA guidance.

b. A Recipient is also a "non-federal entity" for grants administration purposes.

c. A Subrecipient is also known as a "Subgrantee" as used in governing statutes regulations and DHS/ FEMA guidance.

d. A Subrecipient is also a "non-federal entity" for grants administration purposes.

e. The "Grant" referred to in this agreement is a subgrant to the Subrecipient passed thru from TDEM to the Subrecipient.

f. Certifying Official will be the Mayor, Judge, or Executive Director authorized to execute these grant terms and conditions, and to submit changes of Subrecipient Agents.

f. Projects and any subsequent versions for those projects accepted by the Subrecipient and subsequently obligated or deobligated by DHS/FEMA are considered subawards to this grant agreement.

A. **Standard of Performance**. Subrecipient shall perform all activities as approved by TDEM. Any change to a project shall receive prior written approval by TDEM and, if required, by FEMA. Subrecipient shall perform all activities in accordance with all terms, provisions and requirements set forth in this Grant, including but not limited to the following Exhibits:
   1. Assurances – Non-Construction Programs, hereinafter referred to as "Exhibit A"
   2. Assurances – Construction Programs, hereinafter referred to as "Exhibit B"
   3. Certifications for Grant Agreements, hereinafter referred to as "Exhibit C"
   4. State of Texas Assurances, hereinafter referred to as "Exhibit D"
   5. Environmental Review Certification, hereinafter referred to as "Exhibit E"
   6. Additional Grant Conditions, hereinafter referred to as "Exhibit F"
   7. Additional Grant Certifications, hereinafter referred to as "Exhibit G"
   8. Request for Information and Documentation referred to as "Exhibit H"

B. **Failure to Perform**. In the event Subrecipient fails to implement and complete the project(s) approved and awarded, or comply with any provision of this Grant, Subrecipient shall be liable to TDEM for an amount not to exceed the award amount of this Grant and may be barred from applying for or receiving additional DHS/FEMA grant program funds

REGULAR SESSION CITY COUNCIL MEETING PACKET FOR THE MEETING TO BE HELD ON SEPTEMBER 20, 2021

or any other grant program funds administered by TDEM until repayment to TDEM is made and any other compliance or audit finding is satisfactorily resolved, in addition to any other remedy specified in this Grant. Failure to timely implement and complete projects may reduce future funding in additional DHS/FEMA and/or other grant programs administered by TDEM.

C. **Funding Obligations**. TDEM shall not be liable to Subrecipient for any costs incurred by Subrecipient that are not allowable costs.
   1. Notwithstanding any other provision of this Grant, the total of all payments and other obligations incurred by TDEM under this Grant shall not exceed the total cumulative award amounts listed on the Subawards (projects and subsequent versions).
   2. Subrecipient shall contribute the match funds listed on the subaward.

   Subrecipient shall refund to TDEM any sum of these Grant funds that has been determined by TDEM or DHS/FEMA to be an overpayment to Subrecipient or that TDEM determines has not been spent by Subrecipient in accordance with this Grant. No refund payment(s) shall be made from local, state or federal Grant funds unless repayment with Grant funds is specifically permitted by statute or regulation. Subrecipient shall make such refund to TDEM within thirty (30) calendar days after TDEM requests such refund

D. **Performance Period**. The performance period for this Grant is listed on the subaward letter for each project. **All projects shall be completed within the performance period AND all reimbursement requests shall be submitted to TDEM within 60 days of the end of the performance period.** Subrecipient shall have expended all Grant funds and submitted reimbursement requests, invoices and any supporting documentation to TDEM within 60 days of the end of the performance period. TDEM shall not be obligated to reimburse expenses incurred after the performance period or submitted after the deadline.

E. **Uniform Administrative Requirements, Cost Principals and Audit Requirements**. Except as specifically modified by law or this Grant, Subrecipient shall administer this Grant through compliance with the most recent version of all applicable laws and regulations, including but not limited to DHS program legislation, Federal awarding agency regulations, and the terms and conditions of this Grant. A non-exclusive list is provided below [not all may apply in every projects]:
   - Public Law 93-288, as amended (Stafford Act)
   - 44 CFR, Emergency Management and Assistance
   - Disaster Mitigation Act of 2000
   - OMB Regulations 2 CFR, Grant and Agreements
   - Executive Order 11988, Floodplain Management
   - Executive Order 11990, Protection of Wetlands
   - Executive Order 12372, Intergovernmental Review of Programs and Activities
   - Executive Order 12549, Debarment and Suspension
   - Executive Order 12612, Federalism
   - Executive Order 12699, Seismic Design
   - Executive Order 12898, Environmental Justice
   - Coastal Barrier Resources Act, Public Law 97-348
   - Single Audit Act, Public Law 98-502
   - Sandy Recovery Improvement Act publications

REGULAR SESSION CITY COUNCIL MEETING PACKET FOR THE MEETING TO BE HELD ON SEPTEMBER 20, 2021

- 16 U.S.C. § 470, National Historic Preservation Act
- 16 U.S.C. § 1531, Endangered Species Act References
- FEMA program publications, guidance and policies

F. **State Requirements for Grants**. Subrecipient shall comply with all other federal, state, and local laws and regulations applicable to this Grant including but not limited to the laws and the regulations promulgated in Texas Government Code, Chapter 783, Uniform Grant and Contract Management, (UGMS) at:
http://www.window.state.tx.us/procurement/catrad/ugms.pdf
and the program State Administrative Plan, available at:
https://grants.tdem.texas.gov
Subrecipient shall, in addition to the assurances and certifications, comply and require each of its subcontractors employed in the completion of the project to comply with all applicable statutes, regulations, executive orders, OMB circulars, terms and conditions of this Grant and the approved application.

Grant funds may not be awarded to or expended by any entity which performs political polling. This prohibition does not apply to a poll conducted by an academic institution as part of the institution's academic mission that is not conducted for the benefit of a particular candidate or party.

Grant funds may not be expended by a unit of local government unless the following limitations and reporting requirements are satisfied:

1. Texas General Appropriations Act, Art. IX, Parts 2 and 3, except there is no requirement for increased salaries for local government employees;
2. Texas Government Code Sections 556.004, 556.005, and 556.006, which prohibits using any money or vehicle to support the candidacy of any person for office, influencing positively or negatively the payment, loan, or gift to a person or political organization for a political purpose, and using Grant funds to influence the passage or defeat of legislation including not assisting with the funding of a lobbyist, or using Grant funds to pay dues to an organization with a registered lobbyist;
3. Texas Government Code Sections 2113.012 and 2113.101, which prohibits using Grant funds to compensate any employee who uses alcoholic beverages on active duty and Subrecipient may not use Grant funds to purchase an alcoholic beverage and may not pay or reimburse any travel expense for an alcoholic beverage;
4. Texas General Appropriations Act, Art. IX, Section 6.13, which requires Subrecipient to make every effort to attain key performance target levels associated with this Grant, including performance milestones, milestone time frames, and related performance reporting requirements; and
5. General Appropriations Act, Art. IX, Sections 7.01 and 7.02, and Texas Government Code §2102.0091, which requires that this Grant may only be expended if Subrecipient timely completes and files its reports.

G. **Restrictions and General Conditions**.

1. Use of Funds. DHS/FEMA Grant funds may only be used for the purposes set forth in this Grant, and shall be consistent with the statutory authority for this Grant. Grant funds may not be used for matching funds for other Federal grants/cooperative agreements, lobbying, or intervention in Federal regulatory or adjudicatory proceedings. In addition,

REGULAR SESSION CITY COUNCIL MEETING PACKET FOR THE MEETING TO BE HELD ON SEPTEMBER 20, 2021

Federal funds may not be used to sue the Federal government or any other government entity.

2. Federal Employee Prohibition. Federal employees are prohibited directly benefiting from any funds under this Grant.
3. Points of Contacts. Within 10 calendar days of any change, Subrecipient shall notify TDEM of any change in designated of Subrecipient Agents as submitted during the execution of this agreement, and any subsequent changes submitted by Subrecipient. In the event a Subrecipient hires a consultant to assist them with managing its Public Assistance grants, they must be listed on the Designated Subrecipient Agent Form. TDEM will direct all correspondence to the Subrecipient but will cc: the consultant on all email exchanges. The Subrecipient will be responsible for sharing written communications with the consultant. The Subrecipient will remain the primary point of contact and must be included in all decision making activities.
4. DUNS Number. Subrecipient confirms its Data Universal Numbering Systems (DUNS) Number is accurate and is registered on Sams.gov. The DUNS Number is the nine digit number established and assigned by Dun and Bradstreet, Inc., at 866/705-5711 or http://fedgov.dnb.com/webform
5. Central Contractor Registration and Universal Identifier Requirements. Subrecipient maintains that it has registered on the System for Award Management (SAM) at www.sam.gov or other federally established site for contractor registration, and entered TDEM-required information. Subrecipient shall keep current, and then review and update the information at least annually. Subrecipient shall keep information current in the SAM database until the later of when it submits this Grant's final financial report or receives final Grant award payment. Subrecipient agrees that it shall not make any subaward agreement or contract related to this Grant without first obtaining the vendor/subawardee's mandatory DUNS number. See Section §200.32 of OMB 2 C.F.R.
6. Reporting Total Compensation of Subrecipient Executives. 2 C.F.R. §200.331; see FEMA Information Bulletin 350.
   a. Applicability and what to report: Subrecipient shall report whether Subrecipient received $25 million or more in Federal procurement contracts or financial assistance subject to the Transparency Act per 2 C.F.R. §200.331. Subrecipient shall report whether 80% or more of Subrecipient's annual gross revenues were from Federal procurement contracts or Federal financial assistance. If Subrecipient answers "yes" to both questions, Subrecipient shall report, along with Subrecipient's DUNS number, the names and total compensation (see 17 C.F.R. §229.402(c)(2)) for each of Subrecipient's five most highly compensated executives for the preceding completed fiscal year.
   b. Where and when to report: Subrecipient shall report executive total compensation at www.sam.gov or other federally established replacement site. By signing this Grant, Subrecipient certifies that, if required, Subrecipient's jurisdiction has already registered, entered the required information, and shall keep information in the SAM database current, and update the information at least annually for each year until the later of when the jurisdiction submits its final financial report or receives final payment. Subrecipient agrees that it shall not make any subaward agreement or contract without first obtaining the subawardee's mandatory DUNS number.
7. Debarment and Suspension. Subrecipient shall comply with Executive Order 12549 and 12689, which provide protection against waste, fraud, and abuse by debarring or

REGULAR SESSION CITY COUNCIL MEETING PACKET FOR THE MEETING TO BE HELD ON SEPTEMBER 20, 2021

suspending those persons deemed irresponsible in their dealings with the Federal government.

8. Direct Deposit. A completed direct deposit form from Subrecipient shall be provided to TDEM, prior to receiving any payments under the provisions of this grant. The direct deposit form is currently available at grants.tdem.texas.gov under Resources/Public Assistance.
9. Property Management and Inventory. Subrecipient shall maintain property/inventory records which, at minimum, shall include a description of the property, a serial number or other identification number, the source of property, who holds title, the acquisition date, the cost of the property, the percentage of Federal participation in the cost of the property, the location, use and condition of the property, and any ultimate disposition data including the date of disposal and sale price of the property Subrecipient shall develop and implement a control system to prevent loss, damage or theft of property and Subrecipient shall investigate and document any loss, damage or theft of property funded under this Grant.
10. Site Visits. DHS/FEMA and/or TDEM, through its authorized representatives, have the right at all reasonable times to make site visits to review project accomplishments and management control systems and to provide such technical assistance as may be required. If any site visit is made by DHS/FEMA on the premises of Subrecipient or a contractor under this Grant, Subrecipient shall provide and shall require its contractors to provide all reasonable facilities and assistance for the safety and convenience of the government representatives in the performance of their duties. All site visits and evaluations shall be performed in such a manner that will not unduly delay the work.

H. **Procurement and Contracting**.

1. Procurements. Subrecipient shall comply with all applicable federal, state, and local laws and requirements, including but not limited to proper competitive solicitation processes where required, for any procurement which utilizes federal funds awarded under this Grant in accordance with 2 C.F.R. 200. 318-326 and Appendix II to Part 200 (A-C) and (E-J)
2. Contract Provisions. All contracts executed using funds awarded under this Grant shall contain the contract provisions listed under 2 C.F.R. 200.326 and Appendix II (A), Uniform Administrative Requirements for Grants and Cooperative Agreements to State and Local Governments.
3. Procurement activities must follow the most restrictive of Federal, State and Local procurement regulations:
    a. Procurement by micro purchase
    b. Procurement by small purchase
    c. Procurement by sealed bid
    d. Procurement by competitive proposal
    e. Procurement by non-competitive proposal, solely when the award of a contract is unfeasible under the other methods

The State must be contacted for approval to use a noncompetitive procurement method. Failure to follow eligible procurement methods will result in ineligible costs. Other types of agreements for services must have State approval prior to use or execution. A copy of the local procurement policy must be provided to the State before initial payment.

REGULAR SESSION CITY COUNCIL MEETING PACKET FOR THE MEETING TO BE HELD ON SEPTEMBER 20, 2021

The **cost plus a percentage of cost** and **percentage of construction** cost methods of contracting **are ineligible**.

Must perform **cost/price analysis** for every procurement action in excess of the Simplified Acquisition Threshold.

Must negotiate profit as a separate element where required.

4. Evidence of non-debarment for vendors must be documented through http://www.sam.gov/portal/public/SAM and http://www.window.state.tx.us/procurement/prog/vendor_performance/debarred/ and submitted for review.
5. Comply with rules related to underutilized businesses (small and minority businesses, women's enterprises and labor surplus firms) at 2 CFR 200.321

I. **Monitoring.** Subrecipient will be monitored periodically by federal, state or local entities, both programmatically and financially, to ensure that project goals, objectives, performance requirements, timelines, milestone completion, budget, and other program-related criteria are met.

TDEM, or its authorized representative, reserves the right to perform periodic desk/office-based and/or on-site monitoring of Subrecipient's compliance with this Grant and of the adequacy and timeliness of Subrecipient's performance pursuant to this Grant. After each monitoring visit, if the monitoring visit reveals deficiencies in Subrecipient's performance under this Grant, a monitoring report will be provided to the Subrecipient and shall include requirements for the timely correction of such deficiencies by Subrecipient. Failure by Subrecipient to take action specified in the monitoring report may be cause for suspension or termination of this Grant pursuant to the Suspension and/or Termination Section herein.

J. **Audit**.

1. Audit of Federal and State Funds. Subrecipient shall arrange for the performance of an annual financial and compliance audit of funds received and performances rendered under this Grant as required by the Single Audit Act (OMB 2 C.F.R. 200.501, formerly A- 133). Subrecipient shall comply, as applicable, with Texas Government Code, Chapter 783, the Uniform Grant Management Standards (UGMS), the State Uniform Administrative Requirements for Grants and Cooperative Agreements.
2. Right to Audit. Subrecipient shall give the United States Department of Homeland Security (DHS), Federal Emergency Management Agency (FEMA), the Comptroller General of the United States, the Texas State Auditor, TDEM, or any of their duly authorized representatives, access to and the right to conduct a financial or compliance audit of Grant funds received and performances rendered under this Grant. Subrecipient shall permit TDEM or its authorized representative to audit Subrecipient's records. Subrecipient shall provide any documents, materials or information necessary to facilitate such audit.
3. Subrecipient's Liability for Disallowed Costs. Subrecipient understands and agrees that it shall be liable to TDEM for any costs disallowed pursuant to any financial or compliance audit(s) of these funds. Subrecipient further understands and agrees that reimbursement to TDEM of such disallowed costs shall be paid by Subrecipient

REGULAR SESSION CITY COUNCIL MEETING PACKET FOR THE MEETING TO BE HELD ON SEPTEMBER 20, 2021

from funds that were not provided or otherwise made available to Subrecipient pursuant to this Grant or any other federal contract.

4. Subrecipient's Facilitation of Audit. Subrecipient shall take such action to facilitate the performance of such audit(s) conducted pursuant to this Section as TDEM may require of Subrecipient. Subrecipient shall ensure that this clause concerning the authority to audit funds received indirectly by subcontractors through Subrecipient and the requirement to cooperate is included in any subcontract it awards.
5. State Auditor's Clause. Subrecipient understands that acceptance of funds under this Grant acts as acceptance of the authority of the State Auditor's Office to conduct an audit or investigation in connection with those funds. Subrecipient further agrees to cooperate fully with the State Auditor's Office in the conduct of the audit or investigation, including providing all records requested. Subrecipient shall ensure that this clause concerning the State Auditor's Office's authority to audit funds and the requirement to cooperate fully with the State Auditor's Office is included in any subgrants or subcontracts it awards. Additionally, the State Auditor's Office shall at any time have access to and the rights to examine, audit, excerpt, and transcribe any pertinent books, documents, working papers, and records of Subrecipient relating to this Grant.

K. **Retention and Accessibility of Records**.

1. Retention of Records. Subrecipient shall follow its own internal retentaion policy, or the state's retention policy, whichever is stricter. At a minimum, the subrecipient shall maintain fiscal records and supporting documentation for all expenditures of this Grant's funds pursuant to the applicable OMB 2 C.F.R. Subpart D – Post Federal Award Requirements, §200.333-337, and this Grant. Subrecipient shall retain these records and any supporting documentation for a minimum of three (3) years from the later of the completion of this project's public objective, submission of the final expenditure report, any litigation, dispute, or audit. Records shall be retained for three (3) years after any real estate or equipment final disposition. The DHS or TDEM may direct Subrecipient to retain documents or to transfer certain records to DHS/FEMA custody when DHS/FEMA determines that the records possess long term retention value.
2. Access to Records. Subrecipient shall give the United States Department of Homeland Security, the Comptroller General of the United States, the Texas State Auditor, TDEM, or any of its duly authorized representatives, access to and the right to examine all books, accounts, records, reports, files, other papers, things or property belonging to or in use by Subrecipient pertaining to this Grant including records concerning the past use of DHS/FEMA funds. Such rights to access shall continue as long as the records are retained by Subrecipient.

L. Changes, Amendments, Suspension or Termination

1. Modification. DHS/FEMA or TDEM may modify this Grant after an award has been made. Once notification has been made in writing, any subsequent request for funds indicates Subrecipient's acceptance of the changes to this Grant. Any alteration, addition, or deletion to this Grant by Subrecipient is not valid.
2. Effect of Changes in Federal and State Laws. Any alterations, additions, or deletions to this Grant that are required by changes in federal and state laws, regulations or policy are automatically incorporated into this Grant without written amendment to this Grant and shall become effective upon the date designated by such law or regulation. In the event DHS/FEMA or TDEM determines that changes are necessary to this Grant after an award has been made, including changes to the period of performance or terms and conditions, Subrecipient shall be notified of the changes in writing. Once notification has

REGULAR SESSION CITY COUNCIL MEETING PACKET FOR THE MEETING TO BE HELD ON SEPTEMBER 20, 2021

been made, any subsequent request for funds will indicate Subrecipient's acceptance of the changes to this Grant.

3. Suspension. In the event Subrecipient fails to comply with any term of this Grant, TDEM may, upon written notification to Subrecipient, suspend this Grant, in whole or in part, withhold payments to Subrecipient and prohibit Subrecipient from incurring additional obligations of this Grant's funds.
4. Termination. TDEM shall have the right to terminate this Grant, in whole or in part, at any time before the end of the Performance Period, if TDEM determines that Subrecipient has failed to comply with any term of this Grant. TDEM shall provide written notice of the termination and include:
   a. The reason(s) for such termination;
   b. The effective date of such termination; and
   c. In the case of partial termination, the portion of this Grant to be terminated.
   d. Appeal may be made to the Deputy Chief of the Texas Division of Emergency Management - Recovery & Mitigation.

M. **Enforcement**. If Subrecipient materially fails to comply with any term of this Grant, whether stated in a federal or state statute or regulation, an assurance, in a state plan or application, a notice of award, or elsewhere, TDEM or DHS/FEMA may take one or more of the following actions, as appropriate in the circumstances:

1. Increased monitoring of projects and require additional financial and performance reports
2. Require all payments as reimbursements rather than advance payments
3. Temporarily withhold payments pending correction of the deficiency
4. Disallow or deny use of funds and matching credit for all or part of the cost of the activity or action not in compliance;
5. Request DHS/FEMA to wholly or partially de-obligate funding for a project
6. Temporarily withhold cash payments pending correction of the deficiency by subrecipient or more severe enforcement action by TDEM or DHS/FEMA;
7. Withhold further awards for the grant program
8. Take other remedies that may be legally available

In taking an enforcement action, TDEM will provide Subrecipient an opportunity for a hearing, appeal, or other administrative proceeding to which Subrecipient is entitled under any statute or regulation applicable to the action involved.

The costs of Subrecipient resulting from obligations incurred by Subrecipient during a suspension or after termination of this Grant are not allowable unless TDEM or DHS/FEMA expressly authorizes them in the notice of suspension or termination or subsequently.

Other Subrecipient costs during suspension or after termination which are necessary and not reasonably avoidable are allowable if:

- The costs result from obligations which were properly incurred by Subrecipient before the effective date of suspension or termination, are not in anticipation of it, and in the case of a termination, are non-cancellable; and
- The costs would be allowable if this Grant were not suspended or expired normally at the end of the funding period in which the termination takes effects.

The enforcement remedies identified in this section, including suspension and termination, do not preclude Subrecipient from being subject to "Debarment and Suspension" under E.O.

REGULAR SESSION CITY COUNCIL MEETING PACKET FOR THE MEETING TO BE HELD ON SEPTEMBER 20, 2021

12549. 2 C.F.R., Appendix II to Part 200, (I).

N. **Conflicts of Interest**. The subrecipient will maintain written standards of conduct covering conflicts of interest and governing the actions of its employees engaged in the selection, award and administration of contracts and will establish safeguards to prohibit employees from using their positions for a purpose that constitutes or presents the appearance of personal or organizational conflict of interest or personal gain.

O. **Closing of this Grant**. TDEM will close each subaward after receiving all required final documentation from the Subrecipient. If the close out review and reconciliation indicates that Subrecipient is owed additional funds, TDEM will send the final payment automatically to Subrecipient. If Subrecipient did not use all the funds received, TDEM will recover the unused funds.

At the completion and closure of all Subrecipient's projects (subawards), TDEM will request the Subrecipient to Certify the completion of all projects (subawards) in accordance of the grants terms and conditions to state there are no further claims under this subgrant.
The closeout of this Grant does not affect:

1. DHS/FEMA or TDEM's right to disallow costs and recover funds on the basis of a later audit or other review;
2. Subrecipient's obligation to return any funds due as a result of later refunds, corrections, or other transactions;
3. Records retention requirements, property management requirements, and audit requirements, as set forth herein; and
4. Any other provisions of this Grant that impose continuing obligations on Subrecipient or that govern the rights and limitations of the parties to this Grant after the expiration or termination of this Grant.

P. **Notices.** All notices and other communications pertaining to this agreement shall be delivered in electronic format and/or writing and shall be transmitted by fax, e-mail, personal hand-delivery (and receipted for) or deposited in the United States Mail, as certified mail, return receipt requested and postage prepaid, to the other party.

REGULAR SESSION CITY COUNCIL MEETING PACKET FOR THE MEETING TO BE HELD ON SEPTEMBER 20, 2021

REGULAR SESSION CITY COUNCIL MEETING PACKET FOR THE MEETING TO BE HELD ON SEPTEMBER 20, 2021

EXHIBIT A

ASSURANCES - NON-CONSTRUCTION PROGRAMS See Standard Form 424B

As the duly authorized representative of Subrecipient, I certify that Subrecipient:

1. Has the legal authority to apply for Federal assistance and the institutional, managerial and financial capability (including funds sufficient to pay the non-Federal share of project cost) to ensure proper planning, management and completion of the project described in this Grant.

2. Will give the Department of Homeland Security, the Texas Division of Emergency Management, the Comptroller General of the United States and, if appropriate, the State, through any authorized representative, access to and the right to examine all records, books, papers, or documents related to this Grant and will establish a proper accounting system in accordance with generally accepted accounting standards or agency directives.

3. Will establish safeguards to prohibit employees from using their positions for a purpose that constitutes or presents the appearance of personal or organizational conflict of interest or personal gain.

4. Will initiate and complete the work within the applicable time frame after receipt of approval of the awarding agency.

5. Will comply with the Intergovernmental Personnel Act of 1970 (42 U.S.C. §§4728-4763) relating to prescribed standards for merit systems for programs funded under one of the 19 statutes or regulations specified in Appendix A of OPM's Standards for a Merit System of Personnel Administration (5 C.F.R. 900, Subpart F).

6. Will comply with all Federal statutes relating to nondiscrimination. These include but are not limited to: (a) Title VI of the Civil Rights Act of 1964 (P.L. 88-352) which prohibits discrimination on the basis of race, color or national origin; (b) Title IX of the Education Amendments of 1972, as amended (20 U.S.C. §§1681-1683, and 1685-1686 and 44 C.F.R. Part 19), which prohibits discrimination on the basis of sex; (c) Section 504 of the Rehabilitation Act of 1973, as amended (29 U.S.C. §794), which prohibits discrimination on the basis of handicaps; (d) the Age Discrimination Act of 1975, as amended (42 U.S.C. §§6101-6107), which prohibits discrimination on the basis of age; (e) the Drug Abuse Office and Treatment Act of 1972 (P.L. 92-255), as amended, relating to nondiscrimination on the basis of drug abuse; (f) the Comprehensive Alcohol Abuse and Alcoholism Prevention, Treatment and Rehabilitation Act of 1970 (P.L. 91-616), as amended, relating to nondiscrimination on the basis of alcohol abuse or alcoholism; (g) §§523 and 527 of the Public Health Service Act of 1912 (42 U.S.C. §§290dd-3 and 290ee-3), as amended, relating to confidentiality of alcohol and drug abuse patient records; (h) Title VIII of the Civil Rights Act of 1968 (42 U.S.C. §§3601 et seq.), as amended, relating to nondiscrimination in the sale, rental or financing of housing; (i) any other nondiscrimination provisions in the specific statute(s) under which agreement for Federal assistance is being made; and (j) the requirements of any other nondiscrimination statute(s) which may apply to the application.

7. Will comply or has already complied with the requirements of Titles II and III of the Uniform Relocation Assistance and Real Property Acquisition Policies Act of 1970 (P.L. 91-646) which provide for fair and equitable treatment of persons displaced or whose property is acquired as a result of Federal or federally-assisted programs. These requirements apply to all interests in real property acquired for project purposes regardless of Federal participation in purchases.

8. Will comply, as applicable, with provisions of the Hatch Act (5 U.S.C. §§1501-1508 and 7324-7328) which limit the political activities of employees whose principal employment activities are funded in whole or in part with Federal funds.

9. Will comply, as applicable, with the provisions of the Davis-Bacon Act (40 U.S.C. §§276a to 276a-7), the Copeland Act (40 U.S.C. §276c and 18 U.S.C. §874), and the Contract Work Hours and Safety Standards Act (40 U.S.C. §§327-333), regarding labor standards for federally-assisted construction sub-agreements.

10. Will comply, if applicable, with flood insurance purchase requirements of Section 102(a) of the Flood Disaster Protection Act of 1973 (P.L. 93-234) which requires recipients in a special flood hazard area to participate in the program and to purchase flood insurance if the total cost of insurable construction and acquisition is $10,000 or more.

11. Will comply with environmental standards which may be prescribed pursuant to the following: (a) institution of environmental quality control measures under the National Environmental Policy Act of 1969 (P.L. 91-190 as amended by 42 U.S.C. 4311 et seq. and Executive Order (EO) 11514) which establishes national policy goals and procedures to protect and enhance the environment, including protection against natural disasters. To comply with NEPA for DHS grant-supported activities, DHS-FEMA requires the environmental aspects to be reviewed and evaluated before final action on the application; (b) notification of violating facilities pursuant to EO 11738; (c) protection of wetlands pursuant to EO 11990; (d) evaluation of flood hazards in floodplains in accordance with EO 11988; (e) assurance of project consistency with the approved State management program developed under the Coastal Zone Management Act of 1972 (16 U.S.C. §§1451 et seq.); (f) comply with the Clean Air Act of 1977, (42 U.S.C. §§7401 et seq. and Executive Order 11738) providing for the protection of and enhancement of the quality of the nation's air resources to promote public health and welfare and for restoring and maintaining the chemical, physical, and biological integrity of the nation's waters; (g) protection of underground sources of drinking water under the Safe Drinking Water Act of 1974, as amended (P.L. 93-523); and, (h) protection of endangered species under the Endangered Species Act of 1973, as amended (P.L. 93- 205).

12. Will comply with the Wild and Scenic Rivers Act of 1968 (16 U.S.C. §§1271 et seq.) related to protecting components or potential components of the national wild and scenic rivers system.

13. Will assist the awarding agency in assuring compliance with Section 106 of the National Historic Preservation Act of 1966, as amended (16 U.S.C. §470), EO 11593 (identification and protection of historic properties), and the Archaeological and Historic Preservation Act of 1974 (16 U.S.C. §§469a-1 et seq.).

14. Will comply with P.L. 93-348, 45 C.F.R. 46, and DHS Management Directive 026-044 (Directive) regarding the protection of human subjects involved in research, development, and related activities supported by this Grant. "Research" means a systematic investigation, including research, development, testing, and evaluation designed to develop or contribute to general knowledge. See Directive for additional provisions for including humans in the womb, pregnant women, and neonates (Subpart B); prisoners (Subpart C); and children (Subpart D). See also state and local law for research using autopsy materials.

15. Will comply with the Laboratory Animal Welfare Act of 1966 (P.L. 89-544, as amended, 7 U.S.C. §§2131 et seq.) which requires the minimum standards of care and treatment for vertebrate animals bred for commercial sale, used in research, transported commercially, or exhibited to the public according to the Guide for Care and Use of Laboratory Animals and Public Health Service Policy and Government Principals Regarding the Care and Use of Animals.

16. Will comply with the Lead-Based Paint Poisoning Prevention Act (42 U.S.C. §§4801 et seq.), which prohibits the use of lead-based paint in construction or rehabilitation of residence structures.

17. Will cause to be performed the required financial and compliance audits in accordance with the Single Audit Act Amendments of 1996 and OMB Circular No. A-133 (now OMB 2 C.F.R. 200.500), "Audits of States, Local Governments, and Non-Profit Organizations."

18. Will comply with all applicable requirements of all other Federal laws, executive orders, regulations, grant guidance, and policies governing this Grant.

EXHIBIT B
ASSURANCES - CONSTRUCTION PROGRAMS See Standard Form 424D

As the duly authorized representative of Subrecipient, I certify that Subrecipient:

1. Has the legal authority to apply for Federal assistance, and the institutional, managerial and financial capability (including funds sufficient to pay the non-Federal share of project costs) to ensure proper planning, management and completion of project described in this Grant.
2. Will give the Department of Homeland Security, the Texas Division of Emergency Management, the Comptroller General of the United States and, if appropriate, the State, the right to examine all records, books, papers, or documents related to this Grant and will establish a proper accounting system in accordance with generally accepted accounting standards or agency directives.
3. Will not dispose of, modify the use of, or change the terms of the real property title or other interest in the site and facilities without permission and instructions from the awarding agency. Will record the Federal awarding agency directives and will include a covenant in the title of real property acquired in whole or in part with Federal assistance funds to assure nondiscrimination during the useful life of this Grant.
4. Will comply with the requirements of the assistance awarding agency with regard to the drafting, review and approval of construction plans and specifications.
5. Will provide and maintain competent and adequate engineering supervision at the construction site to ensure that the complete work conforms with the approved plans and specifications and will furnish progressive reports and such other information as may be required by the awarding agency or State.
6. Will initiate and complete the work within the applicable time frame after receipt of approval of the awarding agency.
7. Will establish safeguards to prohibit employees from using their positions for a purpose that constitutes or presents the appearance of personal or organizational conflict of interest or personal gain.
8. Will comply with the Intergovernmental Personnel Act of 1970 (42 U.S.C. §§4728-4763) relating to prescribed standards of merit systems for programs funded under one of the 19 statutes or regulations specified in Appendix A of OPM's Standards for a Merit System of Personnel Administration (5 C.F.R. 900, Subpart F).
9. Will comply with the Lead-Based Paint Poisoning Prevention Act (42 U.S.C. §§4801 et seq.) which prohibits the use of lead-based paint in construction or rehabilitation of residence structures.
10. Will comply with all Federal statutes relating to nondiscrimination. These include but are not limited to: (a) Title VI of the Civil Rights Act of 1964 (P.L. 88-352) which prohibits discrimination on the basis of race, color or national origin; (b) Title IX of the Education Amendments of 1972, as amended (20 U.S.C. §§1681 1683, and 1685-1686 and 44 C.F.R. Part 19), which prohibits discrimination on the basis of sex; (c) Section 504 of the Rehabilitation Act of 1973, as amended (29) U.S.C. §794), which prohibits discrimination on the basis of handicaps; (d) the Age Discrimination Act of 1975, as amended (42 U.S.C. §§6101-6107), which prohibits discrimination on the basis of age; (e) the Drug Abuse Office and Treatment Act of 1972 (P.L. 92-255), as amended relating to nondiscrimination on the basis of drug abuse; (f) the Comprehensive Alcohol Abuse and Alcoholism Prevention, Treatment and rehabilitation Act of 1970 (P.L. 91-616), as amended, relating to nondiscrimination on the basis of alcohol abuse or alcoholism; (g) §§523 and 527 of the Public Health Service Act of 1912 (42 U.S.C. §§290dd-3 and 290ee-3), as amended, relating to confidentiality of alcohol and drug abuse patient records; (h) Title VIII of the Civil Rights Act of 1968 (42 U.S.C. §§3601 et seq.), as amended, relating to nondiscrimination in the sale, rental or financing of housing; (i) any other nondiscrimination provisions in the specific statue(s) under which agreement for Federal assistance is being made; and (j) the requirements of any other nondiscrimination statue(s) which may apply to the agreement.
11. Will comply or has already complied with the requirements of Titles II and III of the Uniform Relocation Assistance and Real Property Acquisition Policies Act of 1970 (P.L. 91-646) which provide for fair and equitable treatment of persons displaced or whose property is acquired as a result of Federal and federally-assisted programs. These requirements apply to all interests in real property acquired for project purposes regardless of Federal participation in purchases.
12. Will comply with the provisions of the Hatch Act (5 U.S.C. §§1501-1508 and 7324-7328) which limit the political activities of employees whose principal employment activities are funded in whole or in part with Federal funds.
13. Will comply, as applicable, with the provisions of the Davis-Bacon Act (40 U.S.C. §§276a to 276a-7), the Copeland Act (40 U.S.C. §276c and 18 U.S.C. §874), and the Contract Work Hours and Safety Standards Act (40 U.S.C. §§327- 333) regarding labor standards for federally- assisted construction sub-agreements.
14. Will comply with flood insurance purchase requirements of Section 102(a) of the Flood Disaster Protection Act of 1973 (P.L. 93-234) which requires recipients in a special flood hazard area to participate in the program and to purchase flood insurance if the total cost of insurable construction and acquisition is $10,000 or more.
15. Will comply with environmental standards which may be prescribed pursuant to the following: (a) institution of environmental quality control measures under the National Environmental Policy Act of 1969 (P.L. 91-190) as amended by 42 U.S.C. 4311 et seq. and Executive Order (EO) 11514 which establishes national policy goals and procedures to protect and enhance the environment, including protection against natural disasters; (b) notification of violating facilities pursuant to EO 11738; (c) protection of wetlands pursuant to EO 11990; (d) evaluation of flood hazards in floodplains in accordance with EO 11988; (e) assurance of project consistency with the approved State management program developed under the Coastal Zone Management Act of 1972 (16 U.S.C. §§1451 et seq.); (f) comply with the Clean Air Act of 1977, (42 U.S.C. §§7401 et seq. and Executive Order 11738) providing for the protection of and enhancement of the quality of the nation's air resources to promote public health and welfare and for restoring and maintaining the chemical, physical, and biological integrity of the nation's waters; (g) protection of underground sources of drinking water under the Safe Drinking Water Act of 1974, as amended (P.L. 93-523); and, (h) protection of endangered species under the Endangered Species Act of 1973, as amended (P.L. 93-205).
16. Will comply with the Wild and Scenic Rivers Act of 1968 (16 U.S.C. §§1271 et seq.) related to protecting components or potential components of the national wild and scenic rivers system.
17. Will assist the awarding agency in assuring compliance with Section 106 of the National Historic Preservation Act of 1966, as amended (16 U.S.C. §470), EO 11593 (identification and protection of historic properties), and the Archaeological and Historic Preservation Act of 1974 (16 U.S.C. §§469a-1 et seq).
18. Will cause to be performed the required financial and compliance audits in accordance with the Single Audit Act Amendments of 1996 and OMB Circular No. A-133 (now OMB 2 C.F.R. 200.500), "Audits of States, Local Governments, and Non-Profit Organizations."
19. Will comply with all applicable requirements of all other Federal laws, executive orders, regulations, grant guidance and policies governing this Grant.

REGULAR SESSION CITY COUNCIL MEETING PACKET FOR THE MEETING TO BE HELD ON SEPTEMBER 20, 2021

Exhibit C

Certifications for Grant Agreements

The undersigned, as the authorized official, certifies the following to the best of his/her knowledge and belief.

A. No Federal appropriated funds have been paid or will be paid by or on behalf of the undersigned to any person for influencing or attempting to influence an officer or employee of an agency, a Member of Congress, an officer or employee of Congress, or an employee or a Member of Congress in connection with the awarding of any Federal contract, the making of any Federal grant, the making of any Federal loan, the entering into of any cooperative agreement, and the extension, continuation, renewal, amendment, or modification of any Federal contract, grant, loan, or cooperative agreement.

B. If any funds other than Federal appropriated funds have been paid or will be paid to any person for influencing or attempting to influence an officer or employee of any agency, a Member of Congress, an officer or employee of Congress, or an employee or a Member of Congress in connection with this Federal contract, grant, loan, or cooperative agreement, the undersigned shall complete and submit Standard Form-LLL Disclosure of Lobbying Activities, in accordance with its instructions.

C. The undersigned shall require that the language of this certification prohibiting lobbying be included in the award documents for all subawards at all tiers (including subcontracts, subgrants, and contracts under grants, loans, and cooperative agreements) and that all subrecipients shall certify and disclose accordingly. This certification is a material representation of fact upon which reliance was placed when this transaction was made or entered into. Submission of this certification is a prerequisite for making or entering into this transaction imposed by Section 1352, Title 31, U.S. Code. Any person who fails to file the required certification shall be subject to a civil penalty of not less than $10,000 and not more than $100,000 for each such failure.

D. As required by Executive Order 12549, Debarment and Suspension, and implemented at 28 C.F.R. Part 67, for prospective participants in primary covered transactions, as defined at 28 C.F.R. Part 67, Section 67.510. (Federal Certification), the Subrecipient certifies that it and its principals and vendors:

1. Are not debarred, suspended, proposed for debarment, declared ineligible, sentenced to a denial of Federal benefits by a State or Federal court, or voluntarily excluded from covered transactions by any Federal department or agency. Subrecipient can access debarment information by going to www.sam.gov and the State Debarred Vendor List at: www.window.state.tx.us/procurement/prog/vendor_performance/debarred.

2. Have not within a three-year period preceding this Grant been convicted of or had a civil judgment rendered against them for commission of fraud or a criminal offense in connection with obtaining, attempting to obtain, or performing a public (Federal, State, or local) transaction or contract under a public transaction, violation of Federal or State antitrust statutes or commission of embezzlement, theft, forgery, bribery, falsification or destruction of records, making false statements, or receiving stolen property;

3. Are not presently indicted for or otherwise criminally or civilly charged by a governmental entity (Federal, State, or local) with commission of any of the offenses enumerated in paragraph (D)(2) of this certification;

4. Have not within a three-year period preceding this Grant had one or more public transactions (Federal, State, or local) terminated for cause or default; or

5. Where Subrecipient is unable to certify to any of the statements in this certification, he or she shall attach an explanation to this Grant. (Federal Certification).

E. Federal funds will be used to supplement existing funds, and will not replace (supplant) funds that have been appropriated for the same purpose. Subrecipient may be required to supply documentation certifying that a reduction in non-federal resources occurred for reasons other than the receipt or expected receipt of federal funds.

F. Subrecipient will comply with 2 C.F.R. Part 180, Subpart C as a condition of receiving grant funds and Subrecipient will require such compliance in any subgrants or contract at the next tier.

G. Subrecipient will comply with the Drug-free Workplace Act, in Subpart B of 2 C.F.R. Part 3001.

H. Subrecipient is not delinquent on any Federal debt. Examples of relevant debt include delinquent payroll and other taxes, audit disallowances, and benefit overpayments. See OMB Circular A-129 and form SF-424, item number 17 for additional information and guidance.

I. Subrecipient will comply with all applicable requirements of all other federal laws, executive orders, regulations, program and administrative requirements, policies and any other requirements governing this Grant.

J. Subrecipient understands that failure to comply with any of the above assurances may result in suspension, termination or reduction of funds in this Grant.

REGULAR SESSION CITY COUNCIL MEETING PACKET FOR THE MEETING TO BE HELD ON SEPTEMBER 20, 2021

EXHIBIT D

State of Texas Assurances

As the duly authorized representative of Subrecipient, I certify that Subrecipient:

1. Shall comply with Texas Government Code, Chapter 573, by ensuring that no officer, employee, or member of the Subrecipient's governing body or of the Subrecipient's contractor shall vote or confirm the employment of any person related within the second degree of affinity or the third degree of consanguinity to any member of the governing body or to any other officer or employee authorized to employ or supervise such person. This prohibition shall not prohibit the employment of a person who shall have been continuously employed for a period of two years, or such other period stipulated by local law, prior to the election or appointment of the officer, employee, or governing body member related to such person in the prohibited degree.
2. Shall insure that all information collected, assembled, or maintained by the Subrecipient relative to a project will be available to the public during normal business hours in compliance with Texas Government Code, Chapter 552, unless otherwise expressly prohibited by law.
3. Shall comply with Texas Government Code, Chapter 551, which requires all regular, special, or called meetings of governmental bodies to be open to the public, except as otherwise provided by law or specifically permitted in the Texas Constitution.
4. Shall comply with Section 231.006, Texas Family Code, which prohibits payments to a person who is in arrears on child support payments.
5. Shall not contract with or issue a license, certificate, or permit to the owner, operator, or administrator of a facility if the Subrecipient is a health, human services, public safety, or law enforcement agency and the license, permit, or certificate has been revoked by another health and human services agency or public safety or law enforcement agency.
6. Shall comply with all rules adopted by the Texas Commission on Law Enforcement pursuant to Chapter 1701, Texas Occupations Code, or shall provide the grantor agency with a certification from the Texas Commission on Law Enforcement that the agency is in the process of achieving compliance with such rules if the Subrecipient is a law enforcement agency regulated by Texas Occupations Code, Chapter 1701.
7. Shall follow all assurances. When incorporated into a grant award or contract, standard assurances contained in the application package become terms or conditions for receipt of grant funds. Administering state agencies and subrecipients shall maintain an appropriate contract administration system to insure that all terms, conditions, and specifications are met. (See UGMS Section _.36 for additional guidance on contract provisions).
8. Shall comply with the Texas Family Code, Section 261.101, which requires reporting of all suspected cases of child abuse to local law enforcement authorities and to the Texas Department of Child Protective and Regulatory Services. Subrecipient shall also ensure that all program personnel are properly trained and aware of this requirement.
9. Shall comply with all federal statutes relating to nondiscrimination. These include but are not limited to: (a) Title VI of the Civil Rights Act of 1964 (P.L. 88-352), which prohibits discrimination on the basis of race, color, or national origin; (b) Title IX of the Education Amendments of 1972, as amended (20 U.S.C. §§1681-1683, and 1685-1686), which prohibits discrimination on the basis of sex; (c) Section 504 of the Rehabilitation Act of 1973, as amended (29 U.S.C. §794), which prohibits discrimination on the basis of handicaps and the Americans with Disabilities Act of 1990 including Titles I, II, and III of the Americans with Disability Act which prohibits recipients from discriminating on the basis of disability in the operation of public entities, public and private transportation systems, places of public accommodation, and certain testing entities, 44 U.S.C. §§ 12101-12213; (d) the Age Discrimination Act of 1974, as amended (42 U.S.C. §§6101-6107), which prohibits discrimination on the basis of age; (e) the Drug Abuse Office and Treatment Act of 1972 (P.L. 92-255), as amended, relating to nondiscrimination on the basis of drug abuse; (f) the Comprehensive Alcohol Abuse and Alcoholism Prevention, Treatment, and Rehabilitation Act of 1970 (P.L. 91-616), as amended, relating to the nondiscrimination on the basis of alcohol abuse or alcoholism; (g) §§523 and 527 of the Public Health Service Act of 1912 (42 U.S.C. §§290dd-3 and 290ee-3), as amended, relating to confidentiality of alcohol and drug abuse patient records; (h) Title VIII of the Civil Rights Act of 1968 (42 U.S.C. §§3601 et seq.), as amended, relating to nondiscrimination in the sale, rental, or financing of housing; (i) any other nondiscrimination provisions in the specific statute(s) under which application for Federal assistance is being made; and (j) the requirements of any other nondiscrimination statute(s) which may apply to this Grant.
10. Shall comply, as applicable, with the provisions of the Davis-Bacon Act (40 U.S.C. §§276a to 276a-7), the Copeland Act (40 U.S.C. §276c and 18 U.S.C. §874), and the Contract Work Hours and Safety Standards Act (40 U.S.C. §§327-333), regarding labor standards for federally assisted construction subagreements.
11. Shall comply with requirements of the provisions of the Uniform Relocation Assistance and Real Property Acquisitions Act of 1970 (P.L. 91-646), which provide for fair and equitable treatment of persons displaced or whose property is acquired as a result of Federal or federally assisted programs. These requirements apply to all interests in real property acquired for project purposes regardless of Federal participation in purchases.
12. Shall comply with the provisions of the Hatch Political Activity Act (5 U.S.C. §§7321-29), which limit the political activity of employees whose principal employment activities are funded in whole or in part with Federal funds.
13. Shall comply with the minimum wage and maximum hours provisions of the Federal Fair Labor Standards Act and the Intergovernmental Personnel Act of 1970, as applicable.

REGULAR SESSION CITY COUNCIL MEETING PACKET FOR THE MEETING TO BE HELD ON SEPTEMBER 20, 2021

14. Shall insure that the facilities under its ownership, lease, or supervision which shall be utilized in the accomplishment of the project are not listed on the Environmental Protection Agency's (EPA) list of Violating Facilities and that it will notify the Federal grantor agency of the receipt of any communication from the Director of the EPA Office of Federal Activities indicating that a facility to be used in the project is under consideration for listing by the EPA (EO 11738).

15. Shall comply with the flood insurance purchase requirements of Section 102(a) of the Flood Disaster Protection Act of 1973, Public Law 93-234. Section 102(a) requires the purchase of flood insurance in communities where such insurance is available as a condition for the receipt of any Federal financial assistance for construction or acquisition proposed for use in any area that has been identified by the Secretary of the Department of Housing and Urban Development as an area having special flood hazards.

16. Shall comply with environmental standards which may be prescribed pursuant to the following: (a) institution of environmental quality control measures under the National Environmental Policy Act of 1969 (P.L. 91-190) and Executive Order (EO) 11514; (b) notification of violating facilities pursuant to EO 11738; (c) protection of wetlands pursuant to EO 11990; (d) evaluation of flood hazards in floodplains in accordance with EO 11988; (e) assurance of project consistency with the approved state management program developed under the Coastal Zone Management Act of 1972 (16 U.S.C. §§1451 et seq.); (f) conformity of federal actions to State (Clear Air) Implem entation Plans under Section 176(c) of the Clear Air Act of 1955, as amended (42 U.S.C. §§7401 et seq.); (g) protection of underground sources of drinking water under the Safe Drinking Water Act of 1974, as amended (P.L. 93-523); and (h) protection of endangered species under the Endangered Species Act of 1973, as amended (P.L. 93-205).

17. Shall comply with the Wild and Scenic Rivers Act of 1968 (16 U.S.C. §§1271 et seq.) related to protecting components or potential components of the national wild and scenic rivers system.

18. Shall assist the awarding agency in assuring compliance with Section 106 of the National Historic Preservation Act of 1966, as amended (16 U.S.C. §470), EO 11593 (identification and protection of historic properties), and the Archaeological and Historic Preservation Act of 1974 (16 U.S.C. §§469a-1 et seq.).

19. Shall comply with the Laboratory Animal Welfare Act of 1966 (P.L. 89-544, as amended, 7 U.S.C. §§2131 et seq.) which requires the minimum standards of care and treatment for vertebrate animals bred for commercial sale, used in research, transported commer cially, or exhibited to the public according to the Guide for Care and Use of Laboratory Animals and Public Health Service Policy and Government Principals Regarding the Care and Use of Animals.

20. Shall comply with the Lead-Based Paint Poisoning Prevention Act (42 U.S.C. §§4801 et seq.) which prohibits the use of lead-based paint in construction or rehabilitation of residential structures.

21. Shall comply with the Pro-Children Act of 1994 (Public Law 103-277), which prohibits smoking within any portion of any indoor facility used for the provision of services for children.

22. Shall comply with all federal tax laws and are solely responsible for filing all required state and federal tax forms.

23. Shall comply with all applicable requirements of all other federal and state laws, executive orders, regulations, and policies governing this program.

24. And its principals are eligible to participate and have not been subjected to suspension, debarment, or similar ineligibility determined by any federal, state, or local governmental entity and it is not listed on a state or federal government's terrorism watch list as described in Executive Order 13224. Entities ineligible for federal procurement have Exclusions listed at https://www.sam.gov/portal/public/SAM/.

25. Shall adopt and implement applicable provisions of the model HIV/AIDS work place guidelines of the Texas Department of Health as required by the Texas Health and Safety Code, Ann., Sec. 85.001, et seq.

REGULAR SESSION CITY COUNCIL MEETING PACKET FOR THE MEETING TO BE HELD ON SEPTEMBER 20, 2021

EXHIBIT E

Environmental Review

As the duly authorized representative of Subrecipient, I certify that Subrecipient:

1. shall assess its federally funded projects for potential impact to environmental resources and historic properties.
2. shall submit any required screening form(s) as soon as possible and shall comply with deadlines established by TDEM. Timelines for the Environmental Planning and Historic Preservation (EHP) review process will vary based upon the complexity of the project and the potential for environmental or historical impact.
3. shall include sufficient review time within its project management plan to comply with EHP requirements. Initiation of any activity prior to completion of FEMA's EHP review will result in a non-compliance finding and TDEM will not authorize or release Grant funds for non-compliant projects.
4. as soon as possible upon receiving this Grant, shall provide information to TDEM to assist with the legally-required EHP review and to ensure compliance with applicable EHP laws and Executive Orders (EO) currently using the FEMA EHP Screening Form OMB Number 1660-0115/FEMA Form 024-0-01 and submitting it, with all supporting documentation, to TDEM for review. These EHP requirements include but are not limited to the National Environmental Policy Act, the National Historic Preservation Act, the Endangered Species Act, EO 11988 – Floodplain Management, EO 11990 – Protection of Wetlands, and EO 12898 – Environmental Justice. Subrecipient shall comply with all Federal, State, and local EHP requirements and shall obtain applicable permits and clearances.
5. shall not undertake any activity from the project that would result in ground disturbance, facility modification, or purchase and use of sonar equipment without the prior approval of FEMA. These include but are not limited to communications towers, physical security enhancements involving ground disturbance, new construction, and modifications to buildings.
6. shall comply with all mitigation or treatment measures required for the project as the result of FEMA's EHP review. Any changes to an approved project description will require re-evaluation for compliance with EHP requirements before the project can proceed.
7. if ground disturbing activities occur during project implementation, Subrecipient shall ensure monitoring of ground disturbance and if any potential archeological resources are discovered, Subrecipient shall immediately cease construction in that area and notify FEMA and the appropriate State Historical Preservation Office.

REGULAR SESSION CITY COUNCIL MEETING PACKET FOR THE MEETING TO BE HELD ON SEPTEMBER 20, 2021

EXHIBIT F

Additional Grant Conditions

1. Additional damage requiring a new Public Assistance project to be written must be reported within 60 days following the Project Scoping meeting with the State- Federal team.

2. All work must be done prior to the approved project completion deadline assigned to each Project (POP). Should additional time be required, a time extension request must be submitted which: a.) Identifies the projects requiring an extension. b.) Explains the reason for an extension. c.) Indicates the percentage of work that has been completed. d.) Provides an anticipated completion date. The reason for an extension must be based on extenuating circumstances or unusual project requirements that are beyond the control of your jurisdiction/organization. **Failure to submit a time extension request 60 days prior to the end of the period of performance may result in reduction or withdrawal of federal funds for approved work.**

3. Any significant change to a project's approved Scope of Work must be reported and approved through TDEM and FEMA before starting the project. Failure to do so will jeopardize grant funding. The Subrecipient shall submit requests for cost overruns requiring additional obligations to TDEM, who will forward to FEMA for review and approval prior to incurring costs.

4. The Project Completion and Certification Report must be submitted to TDEM within 60 days of all approved work being completed for each project. If any project requires the purchase of insurance as a condition of receiving federal funds, a copy of the current policy must be attached to this report, or Duplication of Benefits form certifying other funds were received to complete the project.

5. A cost overrun appeal on small ($128,900) Public Assistance projects must be reported to the Texas Division of Emergency Management (TDEM) within 60 days of completing the last small project in order to be considered for additional funding.

6. Appeals may be filed on any determination made by FEMA or TDEM. All appeals must be submitted to TDEM within 60 days from receiving written notice of the action you wish to appeal. Should you wish to appeal a determination contained in the project application, the 60 days will start the day the application is signed. Appeals for Alternative Projects will be subject to the terms of the signed agreement for the Alternative Project.

7. Public Assistance program projects will not receive funding until all of the requirements identified in the comments section of the Project Worksheet are met.

8. You may request a payment of funds on projects by initiating a Request for Reimbursement (RFR) in TDEM's Grant Management System (GMS) or an Advance of Funds Request (AFR), and including documentation supporting your request. Small Public Assistance projects are paid upon obligation and will be initiated by TDEM personnel. Payments for open projects must be requested at least quarterly if expenditures have been made in that quarter.

9. Subrecipients will be required to submit quarterly project reports (QPR) for open large projects using TDEM's GMS. Your assigned Grant Coordinator will coordinate the due date for your specific reporting. Public Assistance program small projects are typically exempt from quarterly reporting, however TDEM reserves the right to require QPRs on any smalls requiring a POP extension. The first quarterly report will be due at the end of the first full quarter following the quarter in which the project was obligated. No quarterlies are required for projects that Subrecipient has initiated a closeout request and has provided a certificate of completion. Failure to submit required quarterly reports for two or more quarters can result in withholding or deobligation of funding for Subrecipients until all reports are submitted and up-to-date.

REGULAR SESSION CITY COUNCIL MEETING PACKET FOR THE MEETING TO BE HELD ON SEPTEMBER 20, 2021

10. Subrecipients expending $750,000 or more in total Federal financial assistance in a fiscal year will be required to provide an audit made in accordance with OMB Uniform Guidance; Cost Principles, Audit, and Administrative Requirements for Federal Awards, Subpart F. A copy of the Single Audit must be submitted to your cognizant State agency or TDEM within nine months of the end of the subrecipient's fiscal year. Consult with your financial officer regarding this requirement. If not required to submit a single audit, a letter must be sent to TDEM certifying to this.

11. Subrecipients will not make any award to any party which is debarred or suspended, or is otherwise excluded from participation in the Federal assistance programs (EO 12549, Debarment and Suspension). Subrecipient must maintain documentation validating review of debarment list of eligible contractors.

12. Subrecipients must keep record of equipment acquired by federal funds for the life cycle of the equipment. A life cycle for most equipment will be three years, but could be longer. If the fair market value of a piece of equipment is valued over $5,000, FEMA will have the right to a portion of proceeds if equipment is sold. If the fair market value of a piece of equipment is less than $5,000, the property can either be retained, sold or designated as surplus with no further obligation to FEMA.

13. TDEM will be using the new FEMA Public Assistance Delivery Model to facilitate the writing of project worksheets (Portal). Subrecipient will be responsible for establishing and maintaining an active account in the Portal and to provide and upload timely, all information requested that is needed to write accurate project worksheets. The Portal will provide the Subrecipient visibility of the entire project writing process.

14. TDEM will be using its new Grant Management System (GMS) for Subrecipient grant management functions. Subrecipient will access GMS to initiate Requests for Reimbursements (RFR), Advance of Funds Requests (AFR), Time Extensions, Scope and Cost changes requests, Quarterly Reports, Project Closeouts, Appeals, and other items deemed necessary by TDEM. Requested forms and processes may be adjusted and changed to accommodate GMS processes and requirements. Subrecipient agrees to monitor GMS as necessary to properly manage and complete awarded projects under this agreement.

16.2 CFR 200.210(a)(15), 2 CFR 200.331(a)(1)(xiii) and (a)(4) make reference to indirect cost rates. The Subrecipient may use the negotiated Indirect Cost Rate approved by its cognizant agency, or may use the 10% de minimis rate of modified total direct costs (MTDC) (as per § 200.414) when receiving Management Costs.

REGULAR SESSION CITY COUNCIL MEETING PACKET FOR THE MEETING TO BE HELD ON SEPTEMBER 20, 2021

EXHIBIT G

Match Certification

Additional Grant Certifications

Subrecipient certifies that it has the ability to meet or exceed the cost share required for all subawards (Projects) and amendments (versions) under this Grant Agreement.

Duplication of Program Statement

Subrecipient certifies there has not been, nor will there be, a duplication of benefits for this project.

Match Certification

Federal Debt Disclosure

Subrecipient certifies that it is not delinquent on any Federal Debt.

For Hazard Mitigation Projects Only:

Maintenance Agreement

Applicant certifies that if there is a Maintenance Agreement needed for this facility copy of that agreement will be provided to TDEM.

Environmental Justice Statement

Federal Executive Order 12898 compliance requirements – If there are any concentrations of low income or minority populations in or near the HMGP project:

1. Applicant certifies that the HMGP project result will not result in a disproportionately high or adverse effect on low income or minority populations.

   OR

2. Applicant certifies that action will be taken to ensure achievement of environmental justice for low income and minority populations related to this HMGP project.

REGULAR SESSION CITY COUNCIL MEETING PACKET FOR THE MEETING TO BE HELD ON SEPTEMBER 20, 2021

Exhibit D

Jersey Village RFP – Generator Project Fee Proposal Form

The undersigned hereby declares that the instructions and specifications have been carefully examined and that emergency backup generators will be furnished and installed for the prices set forth in this Proposal. It is understood and agreed that the instructions, specifications, compliance questions, answers, and additional responses are an integral part of the Proposal submission from the undersigned.

The undersigned contractor further agrees and understands that the City of Jersey Village reserves the right to accept any Proposal, to reject any or all Proposals, to waive irregularities and/or informalities in any Proposal, to make the award in any manner the City believes to be in its best interest, and to reduce or eliminate this purchase agreement without prior notice.

Breakdown of Charges:

1. Fire Station Generator and Installation $_____
2. Police Station Generator and Installation $_____
3. Village Drive Water Treatment Plant Construction of Generator Pad $_____
4. Village Drive Water Treatment Plant Generator and Installation $_____

Total Cost of Proposal $_____

Company Name:	Authorized Signer Name and Title:
Signature of Authorized Signer:	Date:
Email Address:	Phone Number:

REGULAR SESSION CITY COUNCIL MEETING PACKET FOR THE MEETING TO BE HELD ON SEPTEMBER 20, 2021

EXHIBIT E - Conflict of Interest Disclosure Statement

Proposer's attention is directed to 23 CFR Part 636 Subpart A and in particular to Subsection 636.116 regarding organizational conflicts of interest. Section 636.103 defines "organizational conflict of interest" as follows:

Organizational conflict of interest means that because of other activities or relationships with other persons, a person is unable or potentially unable to render impartial assistance or advice to the owner, or the person's objectivity in performing the contract work is or might be otherwise impaired, or a person has an unfair competitive advantage.

Proposers are advised that in accordance with TxDOT's Conflicts of Interest Policy, certain firms will not be allowed to participate on any Proposer's team for the Project because of their work with TxDOT in connection with the Project procurement and document preparation and the CDA program.

1 . Disclosure Pursuant to Section 636.116(2)(v)

In the space provided below, and on supplemental sheets as necessary, identify all relevant facts relating to past, present, or planned interest(s) of the Proposer's team (including the Proposer, the Developer, the Major Participants, proposed consultants and proposed subcontractors, and their respective chief executives, directors, and key project personnel) which may result, or could be viewed as, an organizational conflict of interest in connection with this RFP.

Proposer shall disclose (a) any current contractual relationships with the City, (b) any past, present, or planned contractual or employment relationships with any City elected official, member, officer, or employee; and (c) any other circumstances that might be considered to create a financial interest in the contract by any City elected official member, officer, or employee if Proposer is awarded the contract.

Proposer shall also disclose matters such as ownership of 10% or more of the stock of, or having directors in common with, any of the RFP preparers. Proposer shall also disclose contractual relationships with an RFP preparer in the nature of a joint venture, as well as relationships wherein the RFP preparer is a contractor or consultant (or subcontractor or subconsultant) to Proposer or a member of Proposer's team. The foregoing is provided by way of example, and shall not constitute a limitation on the disclosure obligations.

2. Explanation

In the space provided on the next page, and on supplemental sheets as necessary, identify steps that have been or will be taken to avoid, neutralize, or mitigate any organizational conflicts of interest described herein.

REGULAR SESSION CITY COUNCIL MEETING PACKET FOR THE MEETING TO BE HELD ON SEPTEMBER 20, 2021

3. Certification

The undersigned hereby certifies that, to the best of his knowledge and belief, no interest exists that is required to be disclosed in this Conflict of Interest Disclosure Statement, other than as disclosed above.

_____

Signature

_____

Name

_____

Title

_____

Company Name

_____

Date

EXHIBIT F - CERTIFICATION REGARDING INELIGIBLE CONTRACTORS

CERTIFICATION REGARDING DEBARMENT, SUSPENSION AND OTHER INELIGIBILITY AND VOLUNTARY EXCLUSION FROM TRANSACTIONS

FINANCED IN PART BY THE U.S. GOVERNMENT

I, _____ hereby certify that
(Name and title of Certifying Officer)

_____
(Name of Company)

1. Are not presently debarred, suspended, proposed for debarment, declared ineligible, or voluntarily excluded from participation by any Federal department or agency or from participation in the Project;
2. Have not within a three-year period preceding this proposal been convicted of or had a civil judgment rendered against them for commission of fraud or a criminal offense in connection with obtaining, attempting to obtain, or performing a public (Federal, State or local) transaction or contract under a public transaction; violation of Federal or State antitrust statues or commission of embezzlement, theft, forgery, bribery, falsification or destruction of records, making false statements, or receiving stolen property;
3. Are not presently indicted for or otherwise criminally or civilly charged by a governmental entity (Federal, State or local) with commission of any of the offenses enumerated in Paragraph 2 of this certification; and
4. Have not within a three-year period preceding this proposal had one or more public transactions (Federal, State or local) terminated for cause or default.

If any Major Participant is unable to certify to any of the statements in this certification, such prospective Major Participant shall attach an explanation to this certification.

I hereby certify and affirm the truthfulness and accuracy of the above statement, and I understand that the provisions of 31 United States Code (U.S.C.) §3801 *et seq*. (Administrative Remedies for False Claims and Statements) are applicable hereto.

Name of Developer _____

Street Address of Developer _____

City, State, Zip _____

Telephone Number of Developer _____

Signature of Certifying Officer _____

Date _____

REGULAR SESSION CITY COUNCIL MEETING PACKET FOR THE MEETING TO BE HELD ON SEPTEMBER 20, 2021

Exhibit G

CERTIFICATION REGARDING USE OF CONTRACT FUNDS FOR LOBBYING

The undersigned certifies, to the best of its knowledge and belief (after due inquiry and investigation), that:

1. No Federal appropriated funds have been paid or will be paid, by or on behalf of the undersigned, to any person for influencing or attempting to influence an officer or employee of any Federal agency, a member of Congress, an officer or employee of Congress, or an employee of a member of Congress in connection with the awarding of any Federal contract, the making of any Federal grant, the making of any Federal loan, the entering into of any cooperative agreement, and the extension, continuation, renewal, amendment, or modification of any Federal contract, grant, loan, or cooperative agreement;

2. If any funds other than Federal appropriated funds have been paid or will be paid to any person for influencing or attempting to influence an officer or employee of any Federal agency, a member of Congress, an officer or employee of Congress, or an employee of a member of Congress in connection with this Federal contract, grant, loan, or cooperative agreement, the undersigned shall complete and submit Standard Form-LLL, "**Disclosure Form to Report Lobbying**," in accordance with its instructions.

This certification is a material representation of fact upon which reliance was placed when this transaction was made or entered into. Submission of this certification is a prerequisite for making or entering into this transaction imposed by 31 U.S.C. § 1352. Any person who fails to file the required certification shall be subject to a civil penalty of not less than $10,000 and not more than $100,000 for each such failure.

The undersigned shall require that the language of this certification be included in all lower tier subcontracts which exceed $100,000 and that all such recipients shall certify and disclose accordingly.

Date: _____ _____
Signature

_____
Title

REGULAR SESSION CITY COUNCIL MEETING PACKET FOR THE MEETING TO BE HELD ON SEPTEMBER 20, 2021

CONFLICT OF INTEREST QUESTIONNAIRE

For vendor doing business with local governmental entity

FORM CIQ

This questionnaire reflects changes made to the law by H.B. 23, 84th Leg., Regular Session.

This questionnaire is being filed in accordance with Chapter 176, Local Government Code, by a vendor who has a business relationship as defined by Section 176.001(1-a) with a local governmental entity and the vendor meets requirements under Section 176.006(a).

By law this questionnaire must be filed with the records administrator of the local governmental entity not later than the 7th business day after the date the vendor becomes aware of facts that require the statement to be filed. *See* Section 176.006(a-1), Local Government Code.

A vendor commits an offense if the vendor knowingly violates Section 176.006, Local Government Code. An offense under this section is a misdemeanor.

OFFICE USE ONLY

Date Received

1 **Name of vendor who has a business relationship with local governmental entity.**

2 ☐ **Check this box if you are filing an update to a previously filed questionnaire.** (The law requires that you file an updated completed questionnaire with the appropriate filing authority not later than the 7th business day after the date on which you became aware that the originally filed questionnaire was incomplete or inaccurate.)

3 **Name of local government officer about whom the information is being disclosed.**

Name of Officer

4 **Describe each employment or other business relationship with the local government officer, or a family member of the officer, as described by Section 176.003(a)(2)(A). Also describe any family relationship with the local government officer. Complete subparts A and B for each employment or business relationship described. Attach additional pages to this Form CIQ as necessary.**

A. Is the local government officer or a family member of the officer receiving or likely to receive taxable income, other than investment income, from the vendor?

☐ Yes ☐ No

B. Is the vendor receiving or likely to receive taxable income, other than investment income, from or at the direction of the local government officer or a family member of the officer AND the taxable income is not received from the local governmental entity?

☐ Yes ☐ No

5 **Describe each employment or business relationship that the vendor named in Section 1 maintains with a corporation or other business entity with respect to which the local government officer serves as an officer or director, or holds an ownership interest of one percent or more.**

6 ☐ Check this box if the vendor has given the local government officer or a family member of the officer one or more gifts as described in Section 176.003(a)(2)(B), excluding gifts described in Section 176.003(a-1).

7

Signature of vendor doing business with the governmental entity

Date

REGULAR SESSION CITY COUNCIL MEETING PACKET FOR THE MEETING TO BE HELD ON SEPTEMBER 20, 2021

CONFLICT OF INTEREST QUESTIONNAIRE
For vendor doing business with local governmental entity

A complete copy of Chapter 176 of the Local Government Code may be found at http://www.statutes.legis.state.tx.us/Docs/LG/htm/LG.176.htm. For easy reference, below are some of the sections cited on this form.

Local Government Code § 176.001(1-a): "Business relationship" means a connection between two or more parties based on commercial activity of one of the parties. The term does not include a connection based on:

(A) a transaction that is subject to rate or fee regulation by a federal, state, or local governmental entity or an agency of a federal, state, or local governmental entity;

(B) a transaction conducted at a price and subject to terms available to the public; or

(C) a purchase or lease of goods or services from a person that is chartered by a state or federal agency and that is subject to regular examination by, and reporting to, that agency.

Local Government Code § 176.003(a)(2)(A) and (B):

(a) A local government officer shall file a conflicts disclosure statement with respect to a vendor if:

***

(2) the vendor:

(A) has an employment or other business relationship with the local government officer or a family member of the officer that results in the officer or family member receiving taxable income, other than investment income, that exceeds $2,500 during the 12-month period preceding the date that the officer becomes aware that

(i) a contract between the local governmental entity and vendor has been executed; or

(ii) the local governmental entity is considering entering into a contract with the vendor;

(B) has given to the local government officer or a family member of the officer one or more gifts that have an aggregate value of more than $100 in the 12-month period preceding the date the officer becomes aware that:

(i) a contract between the local governmental entity and vendor has been executed; or

(ii) the local governmental entity is considering entering into a contract with the vendor.

Local Government Code § 176.006(a) and (a-1)

(a) A vendor shall file a completed conflict of interest questionnaire if the vendor has a business relationship with a local governmental entity and:

(1) has an employment or other business relationship with a local government officer of that local governmental entity, or a family member of the officer, described by Section 176.003(a)(2)(A);

(2) has given a local government officer of that local governmental entity, or a family member of the officer, one or more gifts with the aggregate value specified by Section 176.003(a)(2)(B), excluding any gift described by Section 176.003(a-1); or

(3) has a family relationship with a local government officer of that local governmental entity.

(a-1) The completed conflict of interest questionnaire must be filed with the appropriate records administrator not later than the seventh business day after the later of:

(1) the date that the vendor:

(A) begins discussions or negotiations to enter into a contract with the local governmental entity; or

(B) submits to the local governmental entity an application, response to a request for proposals or bids, correspondence, or another writing related to a potential contract with the local governmental entity; or

(2) the date the vendor becomes aware:

(A) of an employment or other business relationship with a local government officer, or a family member of the officer, described by Subsection (a);

(B) that the vendor has given one or more gifts described by Subsection (a); or

(C) of a family relationship with a local government officer.

REGULAR SESSION CITY COUNCIL MEETING PACKET FOR THE MEETING TO BE HELD ON SEPTEMBER 20, 2021

CITY COUNCIL
CITY OF JERSEY VILLAGE, TEXAS
AGENDA REQUEST

AGENDA DATE: September 20, 2021 **AGENDA ITEM**: G7

AGENDA SUBJECT: Consider Resolution 2021-59, authorizing the City Manager to enter into a contract with Aguirre & Fields, LP for design services and construction management of the Seattle Street Reconstruction Project.

Department/Prepared By: Austin Bleess, City Manager **Date Submitted**: September 7, 2021

EXHIBITS: Resolution No. 2021-59
EXA – Aguirre & Fields Contract

BUDGETARY IMPACT:	Required Expenditure:	$ 96,882
	Amount Budgeted:	$ 2,100,000
	Appropriation Required:	$

CITY MANAGER APPROVAL: **AB**

BACKGROUND INFORMATION:
Earlier this year City staff started the process of designing the Seattle Street reconstruction project. We were hopeful that this could be done in house with existing staff. However, it has become apparent that doing this with existing staff is not going to be feasible in order to mee the timelines that we need to for the federal funding of the water line portion of the project.

As we have recently gone out for RFQ for engineering services for the E127 Project staff has reached out to Aguirre & Fields to inquire about their availability to handle the design and construction management of the Seattle Street project. They have reviewed the work done to date by staff and estimate the work is about 50% complete. Staff is recommending the City engage them to complete the remainder of the work and the construction management.

Their experience in working on projects that utilize federal funds and their project management was a key factor in staff making this recommendation. Their staffing and availability to meet the deadlines that we require, while utilizing the work we have already done, was also a key point in this. Our timeline for this project is to have the project out to bid in November, open bids in early December, and for Council to award a bid at the December Council meeting. Construct would likely start in February, which would allow plenty of time for the federal funding to be utilized before the deadline for that.

Staff recommends approval of Resolution 2021-59, authorizing the City Manager to enter into a contract with Aguirre & Fields for design services and construction management of the Seattle Street Reconstruction Project.

RECOMMENDED MOTION:
To approve Resolution 2021-59, authorizing the City Manager to enter into a contract with Aguirre & Fields for design services and construction management of the Seattle Street Reconstruction Project.

REGULAR SESSION CITY COUNCIL MEETING PACKET FOR THE MEETING TO BE HELD ON SEPTEMBER 20, 2021

RESOLUTION NO. 2021-59

A RESOLUTION OF THE CITY COUNCIL OF THE CITY OF JERSEY VILLAGE, TEXAS, AUTHORIZING THE CITY MANAGER TO ENTER INTO A CONTRACT WITH AGUIRRE & FIELDS FOR DESIGN SERVICES AND CONSTRUCTION MANAGEMENT OF THE SEATTLE STREET RECONSTRUCTION PROJECT.

WHEREAS, the City is desires to have an outside engineering firm complete the design and construction management for the Seattle Street Reconstruction Project; and

WHEREAS, the Aguirre & Fields is a qualified firm for this project; **NOW THEREFORE,**

BE IT RESOLVED BY THE CITY COUNCIL OF THE CITY OF JERSEY VILLAGE, TEXAS, THAT:

Section 1. The City Council authorizes the City Manager to enter into a contract for Design Services and Construction Management for the Seattle Street Reconstruction Project with Aguirre & Fields in substantially the form attached to this document in Exhibit A.

PASSED AND APPROVED this **20th** day of **September**, A.D., **2021**.

_____
Bobby Warren, Mayor

ATTEST:

_____
Lorri Coody, City Secretary

REGULAR SESSION CITY COUNCIL MEETING PACKET FOR THE MEETING TO BE HELD ON SEPTEMBER 20, 2021

DocuSign Envelope ID: 87F016AE-C042-4E85-B84B-3143DC3F6E3F

REGULAR SESSION CITY COUNCIL MEETING PACKET FOR THE MEETING TO BE HELD ON SEPTEMBER 20, 2021

GENERAL SERVICES CONTRACT

This General Services Contract (the "Contract") is made by and between the **City of Jersey Village**, a State of Texas home rule municipal corporation (the "City"), and **Aguirre & Fields, LP** (the "Contractor") (with each being a "Party", and together, the "Parties"), and shall be in full force and effect on the date of execution by the authorized representatives of the Parties below (the "Effective Date").

SECTION 1. Summary of the Services.

Description of Services: Contract #2021-JV-11
Design, bid and construction phase services associated with the Seattle Street Subdivision Drainage Improvements Project.

As included in Attachment A – Aguirre & Fields, LP Proposal dated September 9, 2021

Annual/Base Services:

As included in Attachment A – Aguirre & Fields, LP Proposal dated September 9, 2021

Work in addition to Base Services:

Effective Date: __ _____

Termination Date: _ _____

SECTION 2. Services and Payment.
Contractor will furnish the Services to the City in accordance with the terms and conditions specified in this Contract. The Contractor will bill the City for the Services provided at intervals of at least thirty (30) days, except for the final billing. The City shall pay the Contractor for the Services in accordance with the terms of this Contract, but all payments to be made by the City to Contractor, including the time of payment and the payment of interest on overdue amounts, are subject to the applicable provisions of Chapter 2251 of the Government Code.

SECTION 3. Termination for Convenience.
The City may terminate this Contract during at any time for the City's own convenience, where the Contractor is not in default, by giving written notice to Contractor. If the City terminated this Contract under this paragraph, then the City will pay the Contractor for the portion of the Services rendered in accordance with this Contract up to the date of termination.

DocuSign Envelope ID: 87F016AE-C042-4E85-B84B-3143DC3F6E3F

REGULAR SESSION CITY COUNCIL MEETING PACKET FOR THE MEETING TO BE HELD ON SEPTEMBER 20, 2021

SECTION 4. Termination for Default.
Either Party may terminate this Contract as provided in this paragraph if the other Party is in default to any term of this Contract. The Party alleging the default will give the other Party notice of the default in writing citing the terms of the Contract that have been breached and what action the defaulting Party must take to cure the default. If the Party in default fails to cure the default as specified in the notice within thirty (30) days, then the Party giving the notice of the default may terminate this Contract by written notice to the other Party, specifying the date of termination. Termination of the Contract under this paragraph does not affect the right of either Party to seek remedies for breach of the Contract as allowed by law, including any damages or costs suffered by either Party.

SECTION 5. Multi-Year Contracts and Funding.
If this Contract extends beyond the City's fiscal year in which it becomes effective, or provides for the City to make any payment during any of the City's fiscal years following the City's fiscal year in which this Contract becomes effective, and the City fails to appropriate funds to make any required Contract payment for that successive fiscal year, and there are no funds from the City's sale of debt instruments to make the required payment, then this Contract automatically terminates at the beginning of the first (1st) day of the City's successive fiscal year of the Contract for which the City has not appropriated funds or otherwise provided for funds to make a required payment under this Contract.

SECTION 6. Liability and Indemnity.
TO THE EXTENT ALLOWED BY LAW, ANY PROVISION OF ANY ATTACHED DOCUMENT THAT IS MADE A PART OF THIS CONTRACT THAT LIMITS THE CONTRACTOR'S LIABILITY TO THE CITY OR RELEASES THE CONTRACTOR FROM LIABILITY TO THE CITY FOR ACTUAL OR COMPENSATORY DAMAGES, LOSS, OR COSTS ARISING FROM THE PERFORMANCE OF THIS CONTRACT, OR THAT PROVIDES FOR CONTRACTUAL INDEMNITY OF EITHER PARTY, IS NOT APPLICABLE OR EFFECTIVE UNDER THIS CONTRACT. EXCEPT WHERE ANY ATTACHED DOCUMENT THAT IS MADE A PART OF THIS CONTRACT PROVIDED BY THE CITY PROVIDES OTHERWISE, EACH PARTY IS RESPONSIBLE FOR DEFENDING AGAINST, AND LIABLE FOR, PAYING ANY CLAIM, SUIT, OR JUDGMENT FOR DAMAGES, LOSS, OR COSTS ARISING FROM THAT PARTY'S NEGLIGENT ACTS OR OMISSIONS IN THE PERFORMANCE OF THIS CONTRACT IN ACCORDANCE WITH APPLICABLE LAW. THIS PROVISION DOES NOT AFFECT THE RIGHT OF EITHER PARTY WHO IS SUED BY A THIRD PARTY OF ACTS OR OMISSIONS ARISING FROM THIS CONTRACT TO BRING IN THE OTHER PARTY AS A THIRD-PARTY DEFENDANT AS ALLOWED BY LAW.

SECTION 7. Assignment.
The Contractor shall not assign this Contract without the prior written consent of the City.

SECTION 8. Law Governing and Venue.
This Contract is governed by the law of the State of Texas and a lawsuit may only be prosecuted on this Contract in a court of competent jurisdiction located in, or having jurisdiction in, Harris County, Texas.

SECTION 9. Entire Contract.
This Contract represents the entire Contract between the Parties and supersedes all prior negotiations, representations, or contracts, either written or oral. This Contract may be amended only by written instrument signed by the Parties.

DocuSign Envelope ID: 87F016AE-C042-4E85-B84B-3143DC3F6E3F

SECTION 10. Independent Contractor.
The Contractor shall perform the work under this Contract as an independent contractor and not as an employee of the City. The City has no right to supervise, direct, or control the Contractor or the Contractor's officers or employees in the means, methods, or details of the Services The Parties agree that the work performed under this Contract is not inherently dangerous, that the Contractor will perform the work in a workmanlike manner, and that the Contractor will take proper care and precautions to insure the safety of the Contractor's officers and employees.

SECTION 11. Dispute Resolution Procedures.
The Parties desire an expeditious means to resolve any disputes that may arise between them regarding this Contract. If either Party disputes any matter relating to this Contract, then the Parties agree to try in good faith, before bringing any legal action, to settle the dispute by submitting the matter to mediation before a third party who will be selected by agreement of the Parties. The Parties will each pay one-half (½) of the mediator's fees.

SECTION 12. Attorney's Fees.
Should the City bring suit against the Contractor for breach of contract or for any other cause relating to this Contract, then the City shall be entitled to seek an award of attorney's fees or other costs relating to the suit.

SECTION 13. Severability.
If a court finds or rules that any part of this Contract is invalid or unlawful, then the remainder of this Contract continues to be binding on the Parties.

SECTION 14. Work Product.
Any work product generated as a result of this Contract shall be the property of the City.

SECTION 15. Compliance with SWMP.
The Contractor acknowledges that it is aware of the Storm Water Management Program (the "SWMP") developed by the City in compliance with the Texas Pollutant Discharge Elimination System General Permit No. TXR040000 (the "General Permit) issued by the Texas Commission on Environmental Quality. For all maintenance and construction activities, such as but not limited to, mowing, painting, general upkeep, and other maintenance-related activities on City-owned facilities which include buildings, amenities, parks, golf courses, detention ponds, and City-owned and operated public infrastructure such as water distribution, treatment, wastewater collection, and storm sewer systems, the Contractor will comply with all SWMP requirements. The Contractor agrees to comply with all applicable stormwater control measures, good housekeeping practices, and facility-specific stormwater management operating procedures described in Part II, Section B.5.(b)(2)-(6) of the General Permit, a copy of which is on file with the City. These procedures include: i) informing or training appropriate employees in implementing pollution prevention and good housekeeping practices; ii) waste disposal removed in accordance with 30 TAC Chapters 330 and 335; iii) identifying pollutants of concern that could be discharged from operation and maintenance activities and, if needed, developing and implementing pollution prevention measures to reduce these potential pollutants; iv) performing visual inspection of pollution prevention measures, as applicable; and, v) maintaining structural controls during the Contractor's work, as warranted.

REGULAR SESSION CITY COUNCIL MEETING PACKET FOR THE MEETING TO BE HELD ON SEPTEMBER 20, 2021

DocuSign Envelope ID: 87F016AE-C042-4E85-B84B-3143DC3F6E3F

REGULAR SESSION CITY COUNCIL MEETING PACKET FOR THE MEETING TO BE HELD ON SEPTEMBER 20, 2021

SECTION 16. Disclosure of Interested Parties.
As required by Section 2252.908, Texas Government Code, if this Contract requires an action or vote by the City before the Contract may be signed, or has a value of at least one million dollars ($1,000,000), then the City may not enter into such Contract unless the Contractor submits a disclosure of interested parties to the City at the time the Contractor submits the signed Contract to the City. The Contractor agrees to submit such disclosure as required by Section 2252.908 of the Texas Government Code on the form 1295, prescribed by the Texas Ethics Commission, unless the Contractor is a publicly traded entity or a wholly owned subsidiary of same, in which case no disclosure is required. The Contractor agrees to access the Texas Ethics Commission website and complete the form 1295, receive a confirmation number and a PDF version of the completed form 1295, execute and notarize a hard copy version of the completed form 1295, and submit it, along with the confirmation number, to the City.

SECTION 17. No Boycott of Israel.
As required by Chapter 2270, Texas Government Code, the Contractor hereby verifies that it does not boycott Israel and will not boycott Israel through the term of this Contract. For purposes of this verification, "Boycott Israel" means refusing to deal with, terminating business activities with, or otherwise taking any action that is intended to penalize, inflict economic harm on, or limit commercial relations specifically with Israel, or with a person or entity doing business in Israel or in an Israeli controlled territory, but does not include an action made for ordinary business purposes. This Section 16 applies only to contracts with a value of one hundred thousand dollars ($100,000) or more that are to be paid wholly or partly from public funds of the City, between the City and any company with ten (10) or more full time employees. Furthermore, this Section 16 does not apply if the Contractor is a sole proprietorship

SECTION 18. No Business with Foreign Terrorist Organization.
Pursuant to Chapter 2252, Texas Government Code, the Contractor represents and certifies that, at the time of execution of this Contract, neither the Contractor, nor any wholly owned subsidiary, majority-owned subsidiary, parent company, or affiliate of the same: (i) engages in business with Iran, Sudan, or any foreign terrorist organization as described in Chapter 806 or 807 of the Texas Government Code, or Subchapter F of Chapter 2252 of the Texas Government Code; or, (ii) is a company listed by the Texas Comptroller of Public Accounts under Sections 806.051, 807.051, or 2252.153 of the Texas Government Code. The term "foreign terrorist organization" in this paragraph has the meaning assigned by Section 2252.151 of the Texas Government Code.

SECTION 19. Additional Contract Documents.
The following specified documents attached to this Contract are hereby made a part of this Contract. Any provision contained in any of the Contractor's Additional Contract Documents specified below that conflicts with this Contract or the General Services Contract Rider (the "Rider") is not applicable, and the terms of this Contract and the Rider shall govern.

A. Contractor's Additional Contract Documents:

- Proposal; Attachment A, Aguirre & Fields, LP Proposal dated September 9, 2021
- Other: _____
- _____

DocuSign Envelope ID: 87F016AE-C042-4E85-B84B-3143DC3F6E3F

B. City's Additional Contract Documents:

- General Services Contract Rider;
- _____
- _____

SIGNATURES

For: CITY

_____
Name [Signature]

Austin Bleess
Name [Printed]

City Manager _____
Title **Date**

For: Aguirre & Fields, LP
Aguirre, LLC – General Partner

DocuSigned by:
Oscar R. Aguirre
Name [Signature]

Oscar R. Aguirre
Name Oscar R. Aguirre, P.E.

Title President 9/9/2021
Date

REGULAR SESSION CITY COUNCIL MEETING PACKET FOR THE MEETING TO BE HELD ON SEPTEMBER 20, 2021

DocuSign Envelope ID: 87F016AE-C042-4E85-B84B-3143DC3F6E3F

REGULAR SESSION CITY COUNCIL MEETING PACKET FOR THE MEETING TO BE HELD ON SEPTEMBER 20, 2021

CITY OF JERSEY VILLAGE – GENERAL SERVICES CONTRACT RIDER

SECTION 1. Application.

This General Services Contract Rider applies to, is a part of, and takes precedence over any conflicting provision in or attachment to the Contract (the "Contract") between the City of Jersey Village, Texas (the "City") and Aguirre & Fields, LP (the "Vendor") (with the City and the Vendor being the "Parties", and each a "Party"), which is attached and described as follows:

Aguirre & Fields, LP

SECTION 2. Payment Provisions.

The City's payments under the Contract, including the time of payment and the payment of interest on overdue amounts, are subject to Chapter 2251, Texas Government Code.

SECTION 3. Multiyear Contracts.

If the City Council of the City (the "Council") does not appropriate funds to make any payment for a fiscal year after the City's fiscal year in which the Contract becomes effective, and there are no proceeds available for payment from the sale of bonds or other debt instruments, then the Contract automatically terminates at the beginning of the first (1st) day of the successive fiscal year. (Section 5, Article XI, Texas Constitution)

SECTION 4. Liability and Indemnity.

Any provision of the Contract is void and unenforceable if it: (i) limits or releases either party from liability that would exist by law in the absence of the provision; (ii) creates liability for either Party that would not exist by law in the absence of the provision; or, (iii) waives or limits either Party's rights, defenses, remedies, or immunities that would exist by law in the absence of the provision. (Section 5, Article XI, Texas Constitution)

SECTION 5. Confidentiality.

Any provision in the Contract that attempts to prevent the City's disclosure of information that is subject to public disclosure under Federal or Texas law, applicable regulation, or court or administrative decision or ruling, is invalid. (Chapter 552, Texas Government Code)

SECTION 6. Tax Exemption.

The City is not liable to the Vendor for any Federal, State, or local taxes for which the City is not liable by law, including State and local sales and use taxes (Section 151.309 and Title 3, Texas Tax Code) and Federal excise tax (Subtitle D of the Internal Revenue Code). Accordingly, those taxes may not be added to any item.

SECTION 7. Contractual Limitations Period.

Any limitations period in the Contract that does not run against the City by law or that is shorter than two (2) years is void. (Sections 16.061 and 16.070, Texas Civil Practice and Remedies Code)

DocuSign Envelope ID: 87F016AE-C042-4E85-B84B-3143DC3F6E3F

REGULAR SESSION CITY COUNCIL MEETING PACKET FOR THE MEETING TO BE HELD ON SEPTEMBER 20, 2021

SECTION 8. Governing Law and Venue.

Texas law governs the Contract and any lawsuit on the Contract must be filed in a court that has jurisdiction in Harris County, Texas.

SECTION 9. Special Conditions.

A. As required by Section 2252.908, Texas Government Code, if the Contract requires an action or vote by the Council before the Contract may be signed, or has a value of at least one million dollars ($1,000,000), then the City may not enter into the Contract unless the Vendor submits a disclosure of interested parties to the City at the time the Vendor submits the signed Contract to the City. The Vendor agrees to submit such disclosure as required by Section 2252.908 of the Texas Government Code on the form 1295, prescribed by the Texas Ethics Commission, unless the Vendor is a publicly traded entity or a wholly owned subsidiary of same, in which case no disclosure is required.

B. As required by Chapter 2270, Texas Government Code, the Vendor hereby verifies that it does not boycott Israel and will not boycott Israel through the term of the Contract. For purposes of this verification, "Boycott Israel" means refusing to deal with, terminating business activities with, or otherwise taking any action that is intended to penalize, inflict economic harm on, or limit commercial relations specifically with Israel, or with a person or entity doing business in Israel or in an Israeli controlled territory, but does not include an action made for ordinary business purposes. This Section 9B applies only to contracts with a value of one hundred thousand dollars ($100,000) or more that are to be paid wholly or partly from public funds of the City, between the City and any company with ten (10) or more full time employees.

C. As required by Chapter 2252, Texas Government Code, the Vendor certifies that, at the time of execution of the Contract neither the Vendor, nor any wholly owned subsidiary, majority-owned subsidiary, parent company or affiliate of the same: (i) engages in business with Iran, Sudan, or any foreign terrorist organization as described in Chapter 806 or 807 of the Texas Government Code, or Subchapter F of Chapter 2252 of the Texas Government Code; or, (ii) is a company listed by the Texas Comptroller of Public Accounts under Sections 806.051, 807.051, or 2252.153 of the Texas Government Code. The term "foreign terrorist organization" in this paragraph has the meaning assigned to such term in Section 2252.151 of the Texas Government Code.

FOR THE CITY OF JERSEY VILLAGE:	**FOR THE VENDOR:**
	DocuSigned by: Oscar R. Aguirre 10F724270CF040B...
Name [Signature]	**Name Oscar R. Aguirre, P.E.**
	Oscar R. Aguirre
Name [Printed]	**Name Aguirre & Fields, LP** **President of Aguirre, LLC – General Partner**
	9/9/2021
Date	**Date**

DocuSign Envelope ID: 87F016AE-C042-4E85-B84B-3143DC3F6E3F

AGUIRRE & FIELDS
ENGINEERING INNOVATORS

REGULAR SESSION CITY COUNCIL MEETING PACKET FOR THE MEETING TO BE HELD ON SEPTEMBER 20, 2021

September 9, 2021

Mr. Austin Bleess, MPA, ICMA-CM
City Manager
City of Jersey Village
16327 Lakeview Drive
Jersey Village, Texas 77040

Re: Letter of Agreement for the City of Jersey Village

Aguirre & Fields, LP (A&F) appreciates the opportunity to submit this letter of agreement to the City of Jersey Village (City) for the design, bidding and construction phase services associated with the Seattle Street Subdivision Drainage Improvements project as we discussed in your office on August 25, 2021. As outlined that day and clarified during subsequent emails, the City intended to design the project in-house, but cannot complete it at this time. The documents are approximately 50% complete. The City has asked A&F to finish the final design plans, specifications, and estimates, assist in bidding the project, and perform construction phase services.

After reviewing the information provided by the City, A&F proposes the following services:

I. Scope of Work

Design Phase

1. Prepare and submit a design schedule.
2. Review available record drawings.
3. Review available underground facilities information from private utility companies.
4. Review the work products of, and otherwise coordinate with the project's surveyor of record.
5. Visit the project site to proof the topographic survey. Note evidence of omitted features, inadequate curb radii, lane widths, or substandard roadway or intersection geometry.
6. Manage the services of an urban forestry consultant in the preparation of a Tree Protection Plan.
7. Complete the paving and grading plans (plan-profile drawings) for the replacement roadway including driveways, sidewalks, and curb ramps.
8. Review and complete the improvements to the storm drainage system.
9. Review and complete the improvements to the gravity sanitary sewer collection system.
10. Review and complete the improvements to the water distribution system.
11. Prepare site signage, striping and pavement marking plans.
12. Prepare Storm Water Pollution Prevention Plan.
13. Prepare construction phasing and traffic control plans.
14. Facilitate the design review and post-construction field inspection of the project's pedestrian elements by a Registered Accessibility Specialist.
15. Submit electronic files and work products using information exchange standards provided by the Client.
16. Prepare Bid Form, and Summary of Work, and edit the technical specifications for inclusion in the Project Manual.
17. Obtain plan approvals from governing agencies.

DocuSign Envelope ID: 87F016AE-C042-4E85-B84B-3143DC3F6E3F

18. Submit interim plans, specifications, and detailed opinion of probable construction cost at 95%, 100% and bid-ready milestones.
19. Incorporate Client comments as appropriate prior to subsequent submittal.

Bid Phase

1. Participate in pre-bid conference.
2. Issue addenda necessitated by bidders' questions or clarifications.
3. Evaluate the bids and prepare a bid tabulation and recommendation letter to the Client for contract award to the lowest responsible bidder.

Construction Phase Services

1. Participate in the pre-construction meeting.
2. Review and approve, or take appropriate action upon the Contractor's submittals, shop drawings, samples, and product data.
3. Visit the site at appropriate intervals during construction to observe materials and completed work to determine if the Work is proceeding in general conformance with the Contract Documents and the design intent.
4. Review properly prepared, timely requests for information from the Contractor.
5. Make changes in the drawings and specifications required by change orders as an Additional Service, except to the extent the changes were caused by A&F's negligent acts or omissions.
6. Attend regularly scheduled construction progress (typically bi-weekly) and called meetings to be available for consultation to answer questions regarding interpretations of the Contract Documents.
7. Participate in establishing the date of substantial completion, attend the substantial completion and final inspection conferences, and participate in the field inspection of the project's pedestrian elements by the designated TDLR representative.
8. Incorporate the changes to the construction plans, as documented during the work by the contractor, to a set of Record Drawings for subsequent use by the Client.

II. Information Provided by Client

1. Geotechnical report entitled: *Geotechnical Engineering Study Drainage and Paving Improvements Seattle Street Jersey Village, Texas*, prepared by *QC Laboratories, Inc. 10810 Northwest Freeway Houston, Texas 77092, Project No.: 21G18264, 24 pages,* dated March 2021.
2. Survey data in a file named EM030421-Model.dwg that was provided to the City by West Belt Surveying, Inc.

III. Proposed Fee

The work will be performed on a lump sum basis as follows:

Design Phase

A&F	$ 55,462.00
Koehl Urban Forestry (includes A&F's 10% markup)	$ 5,115.00
Bid Phase	$ 5,081.00
Construction Phase	$ 31,224.00
Total	$ 96,882.00

REGULAR SESSION CITY COUNCIL MEETING PACKET FOR THE MEETING TO BE HELD ON SEPTEMBER 20, 2021

DocuSign Envelope ID: 87F016AE-C042-4E85-B84B-3143DC3F6E3F

IV. Additional Documentation

The following document is attached and made a part of this Agreement:

Exhibit A – Standard Terms and Conditions

Thank you for the opportunity to enter into this agreement. Upon proposal acceptance, please sign and date and return to Aguirre & Fields. I will also follow up with you to discuss and review this information.

Subconsultant	**Engineer**
Aguirre & Fields, LP Aguirre, LLC – General Partner	The City of Jersey Village
Signed: DocuSigned by: Oscar R. Aguirre 107724270CF040B...	Signed:
Name: Oscar R. Aguirre, P.E.	Name:
Title: President	Title:
Date: September 9, 2021	Date:

REGULAR SESSION CITY COUNCIL MEETING PACKET FOR THE MEETING TO BE HELD ON SEPTEMBER 20, 2021

DocuSign Envelope ID: 87F016AE-C042-4E85-B84B-3143DC3F6E3F

LEVEL OF EFFORT ESTIMATE

Professional Engineering Services for
For
Seattle Street Subdivision Drainage Improvements

Client: City of Jersey Village **September 9, 2021**

Item No.	Task Description	Project Manager	Senior Engineer	Design Engineer	Engineer / EIT	Senior CADD Operator	CADD Operator	Admin/ Clerical	Subtotal Man Hours	Subtotal Labor Cost
	Hourly Billing Rate:	**$ 267.00**	**$ 221.00**	**$ 160.00**	**$ 114.00**	**$ 163.00**	**$ 85.00**	**$ 114.00**		
	Total Hours:	**58**	**36**	**167**	**115**	**53**	**188**	**34**	**651**	
1.0	**Data and Contract Management**									
1.1	Kickoff meeting, develop and maintain project schedule	3	3						6	$ 1,464.00
1.2	Obtain and review record data		1	2	4				7	$ 997.00
1.3	Obtain and review private utility data			1	4				5	$ 616.00
1.4	Coordinate with surveyor of record		2	4		6			12	$ 2,060.00
1.5	Field verify/proof topographic survey			6	4				10	$ 1,416.00
1.6	Identify utility conflicts	1		2	6				9	$ 1,271.00
1.7	Client meetings (2), and prepare minutes	2	4						6	$ 1,418.00
1.8	Monthly Invoicing	2		5				10	17	$ 2,474.00
1.9								**Subtotal Data and Contract Management:**		**$ 11,716.00**
2.0	**Final Design**									
2.1	Cover sheet, index, location maps				1	1	2		4	$447.00
2.2	General notes	1		1	2		2		6	$825.00
2.3	Legends & abbreviations			1			2		3	$330.00
2.4	Project layout sheet			1	2	3	5		11	$1,302.00
2.5	Horizontal alignment data and swing ties					3	2		5	$659.00
2.6	Typical sections	1		2		1	14		18	$1,940.00
2.7	Review and complete paving and grading, water line, drainage, and sanitary sewer designs (plan & profile sheets)	3		14	28	20	60		125	$14,593.00
2.8	Prepare signing & pavement marking plan			1	2	1	6		10	$1,061.00
2.9	Prepare streetlight conduit plans			2	12	2	8		24	$2,694.00
2.10	Prepare SW3P			1	4	1	5		11	$1,204.00
2.11	Review and complete construction phasing and TCP plans			3		5	10		18	$2,145.00
2.12	Standards and detail drawings			2		4	12		18	$1,992.00
2.13	Bid Form & Summary of Work	1		8					9	$1,547.00
2.14	Opinion of probable cost	1		2	4		8		15	$1,723.00
2.15	95% Design submittal	1	6	4	8		4		23	$3,485.00
2.16	Group review mtg., incorporate comments from 95% review	2	4	2			4		12	$2,078.00
2.17	100% Design submittal	1	2	4	6				13	$2,033.00
2.18	Incorporate comments from 100% review			2			4		6	$660.00
2.19	Final opinion of probable cost	1		1	2				4	$655.00
2.20	Bid-ready submittal	1	2	4	6		4		17	$2,373.00
2.21								**Subtotal Final Design:**		**$43,746.00**
3.0	**Bid Phase**									
3.1	Pre-bid conference	4		4					8	$ 1,708.00
3.2	Draft and issue addenda	1		2	4		12		19	$ 2,063.00
3.3	Bid evaluation and tabulation	1		1	4				6	$ 883.00
3.4	Award recommendation letter	1		1					2	$ 427.00
3.5								**Subtotal Final Design:**		**$ 5,081.00**

REGULAR SESSION CITY COUNCIL MEETING PACKET FOR THE MEETING TO BE HELD ON SEPTEMBER 20, 2021

DocuSign Envelope ID: 87F016AE-C042-4E85-B84B-3143DC3F6E3F

LEVEL OF EFFORT ESTIMATE

Professional Engineering Services for
For
Seattle Street Subdivision Drainage Improvements

Client: City of Jersey Village **September 9, 2021**

Item No.	Task Description	Project Manager	Senior Engineer	Design Engineer	Engineer / EIT	Senior CADD Operator	CADD Operator	Admin/ Clerical	Subtotal Man Hours	Subtotal Labor Cost
	Hourly Billing Rate:	**$ 267.00**	**$ 221.00**	**$ 160.00**	**$ 114.00**	**$ 163.00**	**$ 85.00**	**$ 114.00**		
	Total Hours:	**58**	**36**	**167**	**115**	**53**	**188**	**34**	**651**	
4.0	**Construction Phase**									
4.1	Pre-construction meeting	4	4						8	$ 1,952.00
4.2	Submittals and shop drawing review		2	4	12				18	$ 2,450.00
4.3	Respond to requests for information (6 assumed)	3	6	12					21	$ 4,047.00
4.4	Progress meeting and prepare minutes (12 max)	12		48					60	$ 10,884.00
4.5	Monthly Invoicing	3		12				24	39	$ 5,457.00
4.6	TDLR field inspection meeting			4					4	$ 640.00
4.7	Substantial completion and final inspection meetings	6							6	$ 1,602.00
4.8	Prepare and submit record drawings	2		4		6	24		36	$ 4,192.00
4.9								**Subtotal Construction Phase:**		**$ 31,224.00**
5.0	**Urban Forestry Services: C.N. Koehl Urban Forestry, Inc.**									
5.1	Tree Protection Plan									$ 4,650.00
5.2	Coord and QA/QC									$ 465.00
5.3								**Subtotal Urban Forestry:**		**$ 5,115.00**
6.0	**Fee Summary**								**Fee Type**	**Task Total**
6.1	Data and Contract Management (1.9)								LS	$ 11,716.00
6.2	Final Design (2.21)								LS	$ 43,746.00
6.3	Bid Phase (3.5)								LS	$ 5,081.00
6.4	Construction Phase (4.9)								LS	$ 31,224.00
6.5	Urban Forestry (5.3)								LS	$ 5,115.00
6.6								**Total Engineering Services Fee:**		**$ 96,882.00**

REGULAR SESSION CITY COUNCIL MEETING PACKET FOR THE MEETING TO BE HELD ON SEPTEMBER 20, 2021

CITY COUNCIL
CITY OF JERSEY VILLAGE, TEXAS
AGENDA REQUEST

AGENDA DATE: September 20, 2021

AGENDA ITEM: G8

AGENDA SUBJECT: Nomination of Appraisal District Board Member

Department/Prepared By: Lorri Coody, City Secretary

Date Submitted: September 13, 2021

EXHIBITS: Resolution No. 2021-60
Harris County Appraisal District Letter
Mike Sullivan Letter

BUDGETARY IMPACT:		
	Required Expenditure:	$
	Amount Budgeted:	$
	Appropriation Required:	$

CITY MANAGER APPROVAL:

BACKGROUND INFORMATION:

Harris County Appraisal District has requested the City's participation in nominating a member for the Harris County Appraisal District's Board of Directors. Mike Sullivan presently serves on the Board and is seeking nomination for this position.

RECOMMENDED ACTION

MOTION: To approve Resolution No. 2021-60, nominating a candidate to serve on the Harris County Appraisal District's Board of Directors.

REGULAR SESSION CITY COUNCIL MEETING PACKET FOR THE MEETING TO BE HELD ON SEPTEMBER 20, 2021

RESOLUTION NO. 2021-60

A RESOLUTION OF THE CITY COUNCIL OF THE CITY OF JERSEY VILLAGE, TEXAS, NOMINATING A CANDIDATE FOR A POSITION ON THE BOARD OF DIRECTORS OF THE HARRIS COUNTY APPRAISAL DISTRICT.

WHEREAS, those cities and towns other than the City of Houston within the Harris County Appraisal District have the right and responsibility to elect one person to the board of directors of the Harris County Appraisal District for a term of office commencing on January 1, 2022, and extending through December 31, 2023, and;

WHEREAS, this governing body desires to exercise its right to nominate a candidate for such position on said board of directors; now, therefore;

BE IT RESOLVED BY THE CITY COUNCIL OF THE CITY OF JERSEY VILLAGE, TEXAS

Section 1. That the facts and recitations set forth in the preamble of this resolution be, and they are hereby, adopted, ratified, and confirmed.

Section 2. That Mike Sullivan, 4811 Shore Hills Drive, Kingwood, TX 77345, be, and he is hereby, nominated as a candidate for that position on the board of directors of the Harris County Appraisal District to be filled by those cities and towns other than the City of Houston within the Harris County Appraisal District for a two year term of office commencing on January 1, 2022.

Section 3. That the presiding officer of the governing body of this taxing unit be, and he or she is hereby, authorized and directed to deliver or cause to be delivered a certified copy of this resolution to the chief appraiser of the Harris County Appraisal District no later than October 15, 2021.

PASSED AND APPROVED this the **20th** day of **September, 2021**.

_____
Bobby Warren, Mayor

ATTEST:

_____
Lorri Coody, City Secretary

CITY OF JERSEY VILLAGE TEXAS A TEXAS STAR COMMUNITY

Harris County Appraisal District
Interoffice Memorandum
OFFICE OF CHIEF APPRAISER

TO: PRESIDING OFFICERS OF TAXING UNITS
SERVED BY THE HARRIS COUNTY APPRAISAL DISTRICT

FROM: ROLAND ALTINGER, CHIEF APPRAISER

SUBJECT: SELECTION OF APPRAISAL DISTRICT BOARD MEMBERS

DATE: SEPTEMBER 1, 2021

Your taxing unit participates in selecting members of the Harris County Appraisal District's board of directors. The board is composed of six members who serve two-year terms, all of which expire December 31, 2021. This memorandum describes the process of selecting directors for the two-year term that begins January 1, 2022.

Functions of the Board
The appraisal district appraises all property in the county for ad valorem tax purposes. The board of directors is the governing body for the district. This board employs the chief appraiser, sets general policies for the district, and adopts the budget for the district. By law, board members cannot communicate with the chief appraiser regarding appraisals. There is no compensation for service on the appraisal district board of directors; however, directors are reimbursed for travel expenses if incurred. The board of directors typically meets once a month.

Participating Units
The current method of selecting directors was established by resolutions of the county, cities, and school districts participating in the appraisal district in 1981. The method of selection was modified in 1991 after the law was changed to provide a voting entitlement to conservation and reclamation districts and has been modified to provide a voting entitlement for junior college districts. Sec. 6.031, Tax Code, authorizes an appraisal district to vary both the size and the method of selecting its board members.

The six members of the Harris County Appraisal District's board of directors are selected as follows:

- One member appointed by the Harris County Commissioners Court.
- One member appointed by the Houston City Council.
- One member appointed by the board of trustees of the Houston Independent School District.

REGULAR SESSION CITY COUNCIL MEETING PACKET FOR THE MEETING TO BE HELD ON SEPTEMBER 20, 2021

- One member appointed by votes of the city councils of the cities other than Houston. Each city council casts a single vote. The candidate who receives the most votes is elected.
- One member appointed by vote of the boards of trustees of the school districts other than Houston Independent School District and by boards of directors of the junior colleges with territory in Harris County. Each school district board casts a single vote. The junior college districts collectively cast a single vote. The candidate who receives the most votes is elected.
- One member appointed by vote of the governing bodies of the conservation and reclamation districts that participate in the appraisal district. Each body casts a single vote. The candidate who receives the most votes is elected.

In the event the county appoints someone other than the county assessor-collector to the board, the county assessor-collector will serve ex officio in a non-voting capacity as a seventh member.

Board members whose terms expire December 31, 2021, are:

- Mike Sullivan, Chairman, representing cities & towns, except City of Houston
- Martina Lemond Dixon, Assistant Secretary, representing junior college districts and school districts other than Houston ISD
- Al Odom, Member, representing City of Houston
- Jim Robinson, Member, representing Harris County
- Elizabeth Santos, Member, representing Houston ISD
- Jonathan Cowen, Member, representing conservation and reclamation districts

Eligibility Requirements
An individual must satisfy certain residency, employment, and conflict-of-interest requirements to be eligible to serve on the board of directors.

Residency: The candidate must be a resident of Harris County, and must have resided in the county for at least two years immediately preceding the date he or she takes office. The appraisal district's boundaries are the same as those for Harris County.

Employment: An employee of a taxing unit served by the appraisal district may not serve, with one exception. An employee may serve if the employee is also a member of the governing body or an elected official of a taxing unit that participates in the district. For example, a member of the governing body of a school district who is also a city employee would be *eligible* to serve on the board.

An individual is *ineligible* to serve on an appraisal district board of directors if the individual has engaged in the business of appraising property for compensation for use in proceedings under this title or of representing property owners for compensation in proceedings under this title in the appraisal district at any time during the preceding three years.

Conflict-of-interest: A candidate may not serve if the candidate is related to a person who is in the business of appraising property or representing property owners for a fee in proceedings in the appraisal district. Relatives barred are those within the second degree by consanguinity

REGULAR SESSION CITY COUNCIL MEETING PACKET FOR THE MEETING TO BE HELD ON SEPTEMBER 20, 2021

(blood) or affinity (marriage). These persons include: spouse; children; brothers and sisters; parents; grandparents; and grandchildren. The spouse's relatives in the same degree are included.

A candidate who contracts with the appraisal district for any purpose, or who contracts with a taxing unit served by the district for a property tax related purpose, may not serve. The same rule applies to candidates who have a substantial interest in businesses contracting with the appraisal district (for any purpose) or with the taxing unit (for property tax purposes). A candidate has a substantial interest if the candidate or the candidate's spouse has combined ownership of at least ten percent (10%) of the voting stock or shares of the business. A candidate also has a substantial interest if the candidate or the candidate's spouse is a partner, limited partner, or an officer of the business. These prohibitions on contracting continue for the duration of the affected director's term of office.

The appraisal district may not employee any person who is related to an appraisal district director within the second degree by affinity or by the third degree of consanguinity. This provision applies to existing employees at the time the director takes office and to employees hired during the director's term.

Delinquent taxes: Texas law makes a person ineligible to serve as an appraisal district director if he or she has delinquent property taxes owing to any taxing unit 60 days after the person knew or should have known of the delinquency.

Selection Procedures

The procedures for selecting members of the board of directors for the two-year term beginning January 1, 2022, are as follows:

For Cities and Towns Other Than the City of Houston

The cities and towns other than the City of Houston appoint one member by majority vote of their city council. The process for these cities and towns involves two steps: nomination and election.

Nomination

The city council of each city and town has the right to nominate a single candidate for the position. To nominate, the governing body must adopt a resolution nominating the candidate by formal action. The mayor, as presiding officer of the city council, must submit the nominee's name to the chief appraiser of the Harris County Appraisal District no later than **October 15, 2021.** The mayor must provide a certified copy of the resolution and may include a cover letter naming the nominee.

Election

Before **October 30, 2021,** the chief appraiser will prepare a ballot listing the nominees in alphabetical order. The chief appraiser will deliver a copy of the ballot to the mayor of each city or town.

REGULAR SESSION CITY COUNCIL MEETING PACKET FOR THE MEETING TO BE HELD ON SEPTEMBER 20, 2021

Prior to December 15, 2021, each city council must cast its vote for one of the nominees, formally adopt a resolution naming the person for whom it votes and submit a certified copy to the chief appraiser. *Ballots received by the chief appraiser after December 15 may not be counted.*

Prior to December 20, 2021, the chief appraiser will count the votes, declare the results, and notify the winner, the nominees and the managers of each city and town. A tie vote will be resolved by a method of chance chosen by the chief appraiser.

For Junior Colleges and School Districts other than The Houston Independent School District

With the exception described below for junior college districts, exactly the same procedure described for cities and towns above applies to the selection of the member who represents junior college districts and school districts other than Houston ISD. The board of trustees of the school districts must nominate and elect following the deadlines and procedures described above. The four junior college districts with territory in Harris County may participate in the selection of the member who represents school districts other than Houston ISD and the junior colleges. However, the junior college districts collectively have the same voting authority as a single school district. See Sec. 6.031(b-1), Tax Code. The boards of trustees of junior college districts may each nominate a candidate following the deadlines and procedures described above. However, the four junior colleges collectively have a single vote in the election. Each board of trustees may cast a vote by resolution and file the resolution with the chief appraiser. The collective vote will be automatically cast for the candidate who receives the most votes from among the junior colleges. As an example, if one candidate receives three votes and another receives one vote, the junior colleges will be deemed to have collectively cast their vote for the candidate who received the three votes.

For Conservation and Reclamation Districts

The procedure and timetable for selecting the member who represents the conservation and reclamation districts are the same as that described above for small cities and school districts.

The conservation and reclamation districts that participate in the appraisal district may cast a single vote. The candidate who receives the most votes is elected.

For Harris County, the City of Houston And the Houston Independent School District

By **December 15, 2021,** the governing body of each of these entities appoints a single person to represent it on the board. Each governing body must formally adopt a resolution naming the person who will serve as a board member and submit it to the chief appraiser at the address shown below:

REGULAR SESSION CITY COUNCIL MEETING PACKET FOR THE MEETING TO BE HELD ON SEPTEMBER 20, 2021

Roland Altinger
Chief Appraiser
Harris County Appraisal District
13013 Northwest Freeway
P. O. Box 920975
Houston, Texas 77292-0975

To assist you in this process, I have enclosed a suggested form of resolution for the nomination of a candidate to the board of directors of the Harris County Appraisal District.

We invite your questions or comments on the board selection process. Please do not hesitate to call me at (713) 957-5274

Sincerely,

Roland Altinger, RPA
Chief Appraiser

Attachments
Cc: HCAD Board Members
Tax Assessor
Attorneys

REGULAR SESSION CITY COUNCIL MEETING PACKET FOR THE MEETING TO BE HELD ON SEPTEMBER 20, 2021

RESOLUTION NO. _____

A RESOLUTION OF THE CITY COUNCIL OF THE CITY OF _____ TEXAS, NOMINATING A CANDIDATE FOR A POSITION ON THE BOARD OF DIRECTORS OF THE HARRIS COUNTY APPRAISAL DISTRICT

WHEREAS, those cities and towns other than the City of Houston within the Harris County Appraisal District have the right and responsibility to elect one person to the board of directors of the Harris County Appraisal District for a term of office commencing on January 1, 2022, and extending through December 31, 2023; and

WHEREAS, this governing body desires to exercise its right to nominate a candidate for such position on said board of directors; now, therefore

BE IT RESOLVED BY THE CITY COUNCIL OF _____

_____:

Section 1. That the facts and recitations set forth in the preamble of this resolution be, and they are hereby, adopted, ratified, and confirmed.

Section 2. That _____ (name), _____

_____ (*address, zip code*)_____(*phone number*), be, and he or she is hereby, nominated as a candidate for that position on the board of directors of the Harris County Appraisal District to be filled by those cities and towns other than the City of Houston within the Harris County Appraisal District for a two-year term of office commencing on January 1, 2022.

Section 3. That the presiding officer of the governing body of this taxing unit be, and he or she is hereby, authorized and directed to deliver or cause to be delivered a certified copy of this resolution to the chief appraiser of the Harris County Appraisal District no later than October 15, 2021.

PASSED AND APPROVED this _____ day of _____, 2021.

_____
Mayor

ATTEST:

_____
City Secretary

REGULAR SESSION CITY COUNCIL MEETING PACKET FOR THE MEETING TO BE HELD ON SEPTEMBER 20, 2021

Mike Sullivan
Chairman, Harris County Appraisal District
4811 Shore Hills Dr.
Kingwood, TX 77345
(512) 501-1555 Mobile
Mike@MikeSullivan.me

September 14, 2021

The Honorable Bobby Warren
Mayor, City of Jersey Village
16327 Lakeview Drive
Jersey Village, TX 77040
Via email: LCoody@jerseyvillagetx.com

Re: Harris County Appraisal District Board of Directors

Dear Mayor Warren:

It has been an honor to serve as your representative on the Harris County Appraisal District Board of Directors. Of the six Directors, I was elected to serve "cities and towns other than Houston", and I take that responsibility seriously. My term ends December 31st, 2021, and I am writing to ask you and your city to pass a Resolution nominating me to serve another two-year term.

During my time on the HCAD board, I have worked hard to ensure that you voice was heard, that budgets are kept in check, and to keep you updated with data, timelines, and maps. Going forward, I pledge to do the same, and to be accessible to you, your city council, and city staff.

HCAD mailed a packet to your city, and in it were details as to the nomination process, timelines, and a sample Resolution for your use. However, I want to highlight that nominations (by Resolution) are due by October 15, 2021. If unable to locate the HCAD packet, please let me know and I will have another sent to you.

I respectfully request that you and your city council nominate me for another two-year term on the HCAD Board of Directors. My previous service on the Board, as Harris County Tax Accessor-Collector, and in the private sector have given me broad experiences that translate to important and effective service on the board.

Please contact me if you have any questions, or if I can answer any questions.

Yours truly,

Mike Sullivan,
Chairman, Harris County Appraisal District *(Not printed or mailed at taxpayer expense)*

REGULAR SESSION CITY COUNCIL MEETING PACKET FOR THE MEETING TO BE HELD ON SEPTEMBER 20, 2021

CITY COUNCIL
CITY OF JERSEY VILLAGE, TEXAS
AGENDA REQUEST

AGENDA DATE: September 20, 2021 **AGENDA ITEM**: G9

AGENDA SUBJECT: Consider Resolution No. 2021-61, authorizing the City Manager to enter into a contract with Aguirre & Fields for the Preliminary Engineering Report and Permitting of the E127 Project.

Department/Prepared By: Austin Bleess, CM **Date Submitted**: September 13, 2021

EXHIBITS: Resolution No. 2021-61
EXA - Aguirre & Fields Agreement

BUDGETARY IMPACT:		
	Required Expenditure:	$1,385,492.50
	Amount Budgeted:	$3,000,000
	Appropriation Required:	$

CITY MANAGER APPROVAL: **AB**

BACKGROUND INFORMATION:

The City is doing a cost share with Flood Control for the E127 Channel Improvements Project. As the project was estimated, by Flood Control, to be $3 million, the City cost share is $1,500,000. Back in 2018 the City applied for, and was awarded, a grant in the amount of $100,000 to help cover the cost share of the City to design the project. We were recently informed that TWBD will cover $500,000 of the costs for this design work.

I have negotiated with Aguirre & Fields and HCFCD a scope that will take us from today through the Preliminary Engineering Report and Permitting Process through the US Army Corps of Engineers (USACE). We would need to negotiate a new contract for the final design, bid documents, construction phase services, and construction engineering and inspection.

The total cost for these services will be $1,385,492.50. Therefore, the total cost of this will be paid for with $100,000 from FEMA Funding, $500,000 from TWDB Funding, and the remaining $785,492.50 will be paid by the City/HCFCD.

RECOMMENDED ACTION:
To approve Resolution No. 2021-61, authorizing the City Manager to enter into a contract with Aguirre & Fields for the Preliminary Engineering Report and Permitting of the E127 Project.

RECOMMENDED MOTION:
To approve Resolution No. 2021-61, authorizing the City Manager to enter into a contract with Aguirre & Fields for the Preliminary Engineering Report and Permitting of the E127 Project.

REGULAR SESSION CITY COUNCIL MEETING PACKET FOR THE MEETING TO BE HELD ON SEPTEMBER 20, 2021

RESOLUTION NO. 2021-61

A RESOLUTION OF THE CITY COUNCIL OF THE CITY OF JERSEY VILLAGE, TEXAS, AUTHORIZING THE CITY MANAGER TO ENTER INTO A CONTRACT WITH AGUIRRE & FIELDS FOR THE PRELIMINARY ENGINEERING REPORT AND PERMITTING OF THE E127 PROJECT.

WHEREAS, the Jersey Village City Council desires to complete the E127 Channel Improvement Project; and

WHEREAS, the City has gone out for RFQ for design services, permitting, and construction management services; and

WHEREAS, the City has sought qualified contractors in accordance with 2 CFR Part 200 and State of Texas procurement standards;

WHEREAS, the City Council authorized the City Manager to negotiate a contract with Aguirre & Fields on July 19, 2021;

NOW THEREFORE BE IT RESOLVED BY THE CITY COUNCIL OF THE CITY OF JERSEY VILLAGE, TEXAS, THAT:

Section 1. The City Council authorizes the City Manager to enter into a contract with Aguirre & Fields for the Preliminary Engineering Report and Permitting of the E127 Project in substantially the form as presented in Exhibit A.

PASSED AND APPROVED this **20th** day of **September**, A.D., **2021**.

_____
Bobby Warren, Mayor

ATTEST:

_____
Lorri Coody, City Secretary



REGULAR SESSION CITY COUNCIL MEETING PACKET FOR THE MEETING TO BE HELD ON SEPTEMBER 20, 2021

GENERAL SERVICES CONTRACT

This General Services Contract (the "Contract") is made by and between the City of Jersey Village, a State of Texas home rule municipal corporation (the "City"), and Aguirre & Fields (the "Contractor") (with each being a "Party", and together, the "Parties"), and shall be in full force and effect on the date of execution by the authorized representatives of the Parties below (the "Effective Date").

SECTION 1. Summary of the Services.

Description of Services: **Preliminary Engineering Report / Preliminary Design as more fully described in the Scope of Services.**

Base Services: N/A

Work in addition to Base Services: **N/A**

Effective Date: **Upon signing of contract**

Termination Date: **Upon completion of work**

SECTION 2. Services and Payment.
Contractor will furnish the Services to the City in accordance with the terms and conditions specified in this Contract. The Contractor will bill the City for the Services provided at intervals of at least thirty (30) days, except for the final billing. The City shall pay the Contractor for the Services in accordance with the terms of this Contract, but all payments to be made by the City to Contractor, including the time of payment and the payment of interest on overdue amounts, are subject to the applicable provisions of Chapter 2251 of the Government Code.

SECTION 3. Termination for Convenience.
The City may terminate this Contract during at any time for the City's own convenience, where the Contractor is not in default, by giving written notice to Contractor. If the City terminated this Contract under this paragraph, then the City will pay the Contractor for the portion of the Services rendered in accordance with this Contract up to the date of termination.

SECTION 4. Termination for Default.
Either Party may terminate this Contract as provided in this paragraph if the other Party is in default to any term of this Contract. The Party alleging the default will give the other Party notice of the default in writing citing the terms of the Contract that have been breached and what action the

defaulting Party must take to cure the default. If the Party in default fails to cure the default as specified in the notice within thirty (30) days, then the Party giving the notice of the default may terminate this Contract by written notice to the other Party, specifying the date of termination. Termination of the Contract under this paragraph does not affect the right of either Party to seek remedies for breach of the Contract as allowed by law, including any damages or costs suffered by either Party.

SECTION 5. Multi-Year Contracts and Funding.
If this Contract extends beyond the City's fiscal year in which it becomes effective, or provides for the City to make any payment during any of the City's fiscal years following the City's fiscal year in which this Contract becomes effective, and the City fails to appropriate funds to make any required Contract payment for that successive fiscal year, and there are no funds from the City's sale of debt instruments to make the required payment, then this Contract automatically terminates at the beginning of the first (1st) day of the City's successive fiscal year of the Contract for which the City has not appropriated funds or otherwise provided for funds to make a required payment under this Contract.

SECTION 6. Liability and Indemnity.
TO THE EXTENT ALLOWED BY LAW, ANY PROVISION OF ANY ATTACHED DOCUMENT THAT IS MADE A PART OF THIS CONTRACT THAT LIMITS THE CONTRACTOR'S LIABILITY TO THE CITY OR RELEASES THE CONTRACTOR FROM LIABILITY TO THE CITY FOR ACTUAL OR COMPENSATORY DAMAGES, LOSS, OR COSTS ARISING FROM THE PERFORMANCE OF THIS CONTRACT, OR THAT PROVIDES FOR CONTRACTUAL INDEMNITY OF EITHER PARTY, IS NOT APPLICABLE OR EFFECTIVE UNDER THIS CONTRACT. EXCEPT WHERE ANY ATTACHED DOCUMENT THAT IS MADE A PART OF THIS CONTRACT PROVIDED BY THE CITY PROVIDES OTHERWISE, EACH PARTY IS RESPONSIBLE FOR DEFENDING AGAINST, AND LIABLE FOR, PAYING ANY CLAIM, SUIT, OR JUDGMENT FOR DAMAGES, LOSS, OR COSTS ARISING FROM THAT PARTY'S NEGLIGENT ACTS OR OMISSIONS IN THE PERFORMANCE OF THIS CONTRACT IN ACCORDANCE WITH APPLICABLE LAW. THIS PROVISION DOES NOT AFFECT THE RIGHT OF EITHER PARTY WHO IS SUED BY A THIRD PARTY OF ACTS OR OMISSIONS ARISING FROM THIS CONTRACT TO BRING IN THE OTHER PARTY AS A THIRD-PARTY DEFENDANT AS ALLOWED BY LAW.

SECTION 7. Assignment.
The Contractor shall not assign this Contract without the prior written consent of the City.

SECTION 8. Law Governing and Venue.
This Contract is governed by the law of the State of Texas and a lawsuit may only be prosecuted on this Contract in a court of competent jurisdiction located in, or having jurisdiction in, Harris County, Texas.

SECTION 9. Entire Contract.
This Contract represents the entire Contract between the Parties and supersedes all prior negotiations, representations, or contracts, either written or oral. This Contract may be amended only by written instrument signed by the Parties.

SECTION 10. Independent Contractor.
The Contractor shall perform the work under this Contract as an independent contractor and not as an employee of the City. The City has no right to supervise, direct, or control the Contractor or

REGULAR SESSION CITY COUNCIL MEETING PACKET FOR THE MEETING TO BE HELD ON SEPTEMBER 20, 2021

the Contractor's officers or employees in the means, methods, or details of the Services The Parties agree that the work performed under this Contract is not inherently dangerous, that the Contractor will perform the work in a workmanlike manner, and that the Contractor will take proper care and precautions to insure the safety of the Contractor's officers and employees.

SECTION 11. Dispute Resolution Procedures.
The Parties desire an expeditious means to resolve any disputes that may arise between them regarding this Contract. If either Party disputes any matter relating to this Contract, then the Parties agree to try in good faith, before bringing any legal action, to settle the dispute by submitting the matter to mediation before a third party who will be selected by agreement of the Parties. The Parties will each pay one-half (½) of the mediator's fees.

SECTION 12. Attorney's Fees.
Should the City bring suit against the Contractor for breach of contract or for any other cause relating to this Contract, then the City shall be entitled to seek an award of attorney's fees or other costs relating to the suit.

SECTION 13. Severability.
If a court finds or rules that any part of this Contract is invalid or unlawful, then the remainder of this Contract continues to be binding on the Parties.

SECTION 14. Work Product.
Any work product generated as a result of this Contract shall be the property of the City.

SECTION 15. Compliance with SWMP.
The Contractor acknowledges that it is aware of the Storm Water Management Program (the "SWMP") developed by the City in compliance with the Texas Pollutant Discharge Elimination System General Permit No. TXR040000 (the "General Permit) issued by the Texas Commission on Environmental Quality. For all maintenance and construction activities, such as but not limited to, mowing, painting, general upkeep, and other maintenance-related activities on City-owned facilities which include buildings, amenities, parks, golf courses, detention ponds, and City-owned and operated public infrastructure such as water distribution, treatment, wastewater collection, and storm sewer systems, the Contractor will comply with all SWMP requirements. The Contractor agrees to comply with all applicable stormwater control measures, good housekeeping practices, and facility-specific stormwater management operating procedures described in Part II, Section B.5.(b)(2)-(6) of the General Permit, a copy of which is on file with the City. These procedures include: i) informing or training appropriate employees in implementing pollution prevention and good housekeeping practices; ii) waste disposal removed in accordance with 30 TAC Chapters 330 and 335; iii) identifying pollutants of concern that could be discharged from operation and maintenance activities and, if needed, developing and implementing pollution prevention measures to reduce these potential pollutants; iv) performing visual inspection of pollution prevention measures, as applicable; and, v) maintaining structural controls during the Contractor's work, as warranted.

SECTION 16. Disclosure of Interested Parties.
As required by Section 2252.908, Texas Government Code, if this Contract requires an action or vote by the City before the Contract may be signed, or has a value of at least one million dollars

REGULAR SESSION CITY COUNCIL MEETING PACKET FOR THE MEETING TO BE HELD ON SEPTEMBER 20, 2021

($1,000,000), then the City may not enter into such Contract unless the Contractor submits a disclosure of interested parties to the City at the time the Contractor submits the signed Contract to the City. The Contractor agrees to submit such disclosure as required by Section 2252.908 of the Texas Government Code on the form 1295, prescribed by the Texas Ethics Commission, unless the Contractor is a publicly traded entity or a wholly owned subsidiary of same, in which case no disclosure is required. The Contractor agrees to access the Texas Ethics Commission website and complete the form 1295, receive a confirmation number and a PDF version of the completed form 1295, execute and notarize a hard copy version of the completed form 1295, and submit it, along with the confirmation number, to the City.

SECTION 17. No Boycott of Israel.
As required by Chapter 2270, Texas Government Code, the Contractor hereby verifies that it does not boycott Israel and will not boycott Israel through the term of this Contract. For purposes of this verification, "Boycott Israel" means refusing to deal with, terminating business activities with, or otherwise taking any action that is intended to penalize, inflict economic harm on, or limit commercial relations specifically with Israel, or with a person or entity doing business in Israel or in an Israeli controlled territory, but does not include an action made for ordinary business purposes. This Section 16 applies only to contracts with a value of one hundred thousand dollars ($100,000) or more that are to be paid wholly or partly from public funds of the City, between the City and any company with ten (10) or more full time employees. Furthermore, this Section 16 does not apply if the Contractor is a sole proprietorship

SECTION 18. No Business with Foreign Terrorist Organization.
Pursuant to Chapter 2252, Texas Government Code, the Contractor represents and certifies that, at the time of execution of this Contract, neither the Contractor, nor any wholly owned subsidiary, majority-owned subsidiary, parent company, or affiliate of the same: (i) engages in business with Iran, Sudan, or any foreign terrorist organization as described in Chapter 806 or 807 of the Texas Government Code, or Subchapter F of Chapter 2252 of the Texas Government Code; or, (ii) is a company listed by the Texas Comptroller of Public Accounts under Sections 806.051, 807.051, or 2252.153 of the Texas Government Code. The term "foreign terrorist organization" in this paragraph has the meaning assigned by Section 2252.151 of the Texas Government Code.

SECTION 19. Additional Contract Documents.
The following specified documents attached to this Contract are hereby made a part of this Contract. Any provision contained in any of the Contractor's Additional Contract Documents specified below that conflicts with this Contract or the General Services Contract Rider (the "Rider") is not applicable, and the terms of this Contract and the Rider shall govern.

A. Contractor's Additional Contract Documents:

- Scope of Services;
- Fee Schedule
- _____

B. City's Additional Contract Documents:

- General Services Contract Rider;
- FEMA Required Contract Clauses
- TWDB Required Contract Clauses

REGULAR SESSION CITY COUNCIL MEETING PACKET FOR THE MEETING TO BE HELD ON SEPTEMBER 20, 2021

SIGNATURES

For: CITY		For: CONTRACTOR	
_____		_____	
Name [Signature]		**Name [Signature]**	
Austin Bleess		_____	
Name [Printed]		**Name [Printed]**	
City Manager	**September 21, 2021**	_____	_____
Title	**Date**	**Title**	**Date**

REGULAR SESSION CITY COUNCIL MEETING PACKET FOR THE MEETING TO BE HELD ON SEPTEMBER 20, 2021

CITY OF JERSEY VILLAGE – GENERAL SERVICES CONTRACT RIDER

SECTION 1. Application.

This General Services Contract Rider applies to, is a part of, and takes precedence over any conflicting provision in or attachment to the Contract (the "Contract") between the City of Jersey Village, Texas (the "City") and Aguirre & Fields (the "Vendor") (with the City and the Vendor being the "Parties", and each a "Party"), which is attached and described as follows:

Contract for Preliminary Engineering Report / Preliminary Design as more fully described in the

Scope of Services.

SECTION 2. Payment Provisions.

The City's payments under the Contract, including the time of payment and the payment of interest on overdue amounts, are subject to Chapter 2251, Texas Government Code.

SECTION 3. Multiyear Contracts.

If the City Council of the City (the "Council") does not appropriate funds to make any payment for a fiscal year after the City's fiscal year in which the Contract becomes effective, and there are no proceeds available for payment from the sale of bonds or other debt instruments, then the Contract automatically terminates at the beginning of the first (1st) day of the successive fiscal year. (Section 5, Article XI, Texas Constitution)

SECTION 4. Liability and Indemnity.

Any provision of the Contract is void and unenforceable if it: (i) limits or releases either party from liability that would exist by law in the absence of the provision; (ii) creates liability for either Party that would not exist by law in the absence of the provision; or, (iii) waives or limits either Party's rights, defenses, remedies, or immunities that would exist by law in the absence of the provision. (Section 5, Article XI, Texas Constitution)

SECTION 5. Confidentiality.

Any provision in the Contract that attempts to prevent the City's disclosure of information that is subject to public disclosure under Federal or Texas law, applicable regulation, or court or administrative decision or ruling, is invalid. (Chapter 552, Texas Government Code)

SECTION 6. Tax Exemption.

The City is not liable to the Vendor for any Federal, State, or local taxes for which the City is not liable by law, including State and local sales and use taxes (Section 151.309 and Title 3, Texas Tax Code) and Federal excise tax (Subtitle D of the Internal Revenue Code). Accordingly, those taxes may not be added to any item.

SECTION 7. Contractual Limitations Period.

Any limitations period in the Contract that does not run against the City by law or that is shorter than two (2) years is void. (Sections 16.061 and 16.070, Texas Civil Practice and Remedies Code)

REGULAR SESSION CITY COUNCIL MEETING PACKET FOR THE MEETING TO BE HELD ON SEPTEMBER 20, 2021

SECTION 8. Governing Law and Venue.

Texas law governs the Contract and any lawsuit on the Contract must be filed in a court that has jurisdiction in Harris County, Texas.

SECTION 9. Special Conditions.

A. As required by Section 2252.908, Texas Government Code, if the Contract requires an action or vote by the Council before the Contract may be signed, or has a value of at least one million dollars ($1,000,000), then the City may not enter into the Contract unless the Vendor submits a disclosure of interested parties to the City at the time the Vendor submits the signed Contract to the City. The Vendor agrees to submit such disclosure as required by Section 2252.908 of the Texas Government Code on the form 1295, prescribed by the Texas Ethics Commission, unless the Vendor is a publicly traded entity or a wholly owned subsidiary of same, in which case no disclosure is required.

B. As required by Chapter 2270, Texas Government Code, the Vendor hereby verifies that it does not boycott Israel and will not boycott Israel through the term of the Contract. For purposes of this verification, "Boycott Israel" means refusing to deal with, terminating business activities with, or otherwise taking any action that is intended to penalize, inflict economic harm on, or limit commercial relations specifically with Israel, or with a person or entity doing business in Israel or in an Israeli controlled territory, but does not include an action made for ordinary business purposes. This Section 9B applies only to contracts with a value of one hundred thousand dollars ($100,000) or more that are to be paid wholly or partly from public funds of the City, between the City and any company with ten (10) or more full time employees.

C. As required by Chapter 2252, Texas Government Code, the Vendor certifies that, at the time of execution of the Contract neither the Vendor, nor any wholly owned subsidiary, majority-owned subsidiary, parent company or affiliate of the same: (i) engages in business with Iran, Sudan, or any foreign terrorist organization as described in Chapter 806 or 807 of the Texas Government Code, or Subchapter F of Chapter 2252 of the Texas Government Code; or, (ii) is a company listed by the Texas Comptroller of Public Accounts under Sections 806.051, 807.051, or 2252.153 of the Texas Government Code. The term "foreign terrorist organization" in this paragraph has the meaning assigned to such term in Section 2252.151 of the Texas Government Code.

FOR THE CITY OF JERSEY VILLAGE:	**FOR THE VENDOR:**
Name [Signature]	**Name [Signature]**
Austin Bleess, City Manager	
Name [Printed]	**Name [Printed]**
September 21, 2021	
Date	**Date**

REGULAR SESSION CITY COUNCIL MEETING PACKET FOR THE MEETING TO BE HELD ON SEPTEMBER 20, 2021

EXHIBIT A – SCOPE OF SERVICES

Project Name: White Oak Bayou Federal Flood Damage Reduction Project

E127-00-00 Channel Modifications

Project Limits: Jones Road to E100

Aguirre & Fields

Project Description

The project includes the channel modifications of approximately 8,100 feet of E127 starting on the east right-of-way (ROW) of Jones Road and stopping at the sheet pile weir just upstream of the confluence with the E100 branch of White Oak Bayou. The existing channel crosses under the Union Pacific railroad trestle, and under both the westbound and eastbound US 290 frontage road and mainlane bridges. The existing E127 channel continues eastwardly with bridge crossings at Rio Grande Street and at Senate Avenue. The channel continues parallel to Elwood Drive before coming to an existing sheet pile weir structure just upstream with the confluence with E100.

There are several goals of this project. One project goal is to provide flood damage reduction along the channel. The goal is to increase the flow in the E127 channel to handle a minimum of a 100-year storm event. The other goal is to add recreational amenities, such as a hike and bike trail along the channel from Rio Grande Street underneath US 290 and connecting to Jones Road. The third goal is to work in conjunction with the Master Development Plan of Village Center. The proposed Village Center will be a 43-acre mixed use development along Jones Road.

Preliminary Engineering Report / Preliminary Design

Scope to include:

Flood Mitigation Assistance Project Grant Administration:

The grant administration subconsultant will aid the City of Jersey Village to complete required quarterly financial and performance reporting to Federal Emergency Management Agency – Flood Mitigation Assistance Program contract manager. Below is a summary of scope for the grant administration team:

1. Update the current grant workplan schedule to include revised schedules for the project.
2. Federal Financial Reports (SF-425) will be submitted within 30-days of the end of the first Federal quarter following the initial grant agreement. Quarterly Federal Financial Reports (FFR) will be submitted until the grant ends. A final FFR will be submitted 90 days after the end date of the performance period.
3. Program Performance Reports (SF-PPR) will be submitted within 30-days of the end of each quarter following the initial grant agreement. Quarterly Program Performance Reports (PPR) will be submitted until the grant ends. A final FFR will be submitted 90 days after the end date of the performance period.

REGULAR SESSION CITY COUNCIL MEETING PACKET FOR THE MEETING TO BE HELD ON SEPTEMBER 20, 2021

4. Quarterly and final report review meetings with Jersey Village, FEMA and project manager.

Surveying:

Below is a brief summary of the scope for the surveyor. The surveyor will follow the Harris County Flood Control District Surveying Guidelines (2019 or latest version).

1. Control Surveying. Perform Control Surveying as specified in the current HCFCD Survey Guidelines, Sections I. and IV. Set Control Monuments at maximum spacing of 1,500 feet. Show survey control data on Right-of-Way Alignment Map. Horizontal control shall be relative to the Texas State Plane Coordinate System, South Central Zone No. 4204, unless otherwise instructed by the Jersey Village project manager or a representative of HCFCD. Vertical control will be referenced to the North American Vertical Datum of 1988 (NAVD88) Orthometric Values, utilizing GEOID 12B, unless otherwise instructed by the Jersey Village project manager or a representative of HCFCD. A minimum of three (3) Harris County Floodplain Reference Marks shall be used to determine vertical control.

2. Topographic Surveying. Identify relevant topographic information, for the limits shown below:
    - Survey full cross sections every 200 feet including water surface, extending an additional 200 feet on each end of the project.
    - Toe to toe cross sections every 100 feet, between full cross sections.
    - Locate all grade breaks, channel confluences, washouts, and drainage structures within project limits. If accessible, open storm and sanitary manholes and inlets within project limits to obtain pipe flowline elevation, size, and material information.
    - Survey visible surface utilities within the project limits. Survey buried utility markings resulting from Texas811 utility locate request by SUE provider. Provide topographic survey to SUE consultant for development of buried utility mapping.
    - Locate all trees 4-inch in diameter and larger located in the channel and along the area from top of bank to fence or ROW.
    - Locate any encroachments into the ROW.
    - Locate any property fences, walls, subdivision monuments, subdivision landscaping, bridges, roadways, medians, sidewalks, ramps, manholes, storm inlets, drainage lines, sewer lines, water lines, fire hydrants, power lines and poles, telephone lines and poles, light poles, gas lines, fiber optic lines, cable lines, monuments, trees, etc.
    - Provide a digital terrain model (DTM) including XML file deliverables with break lines and point files.

3. Perform abstracting to recover original survey corners, property corners, etc. to determine existing HCFCD right-of-way.
4. Establish project baseline.
5. Provide clearances for overhead lines that are crossing or adjacent to the E127 channel.
6. Survey locate geotechnical borings after they are drilled.

REGULAR SESSION CITY COUNCIL MEETING PACKET FOR THE MEETING TO BE HELD ON SEPTEMBER 20, 2021

Right-of-Way Acquisition:

1. Prepare Right-of-way Alignment Map in accordance with HCFCD Land Surveying Guidelines.
2. ROW Coordination Meeting with HCFCD and EOR.
3. For proposed parcel acquisitions, prepare exhibits and written legal description in accordance with HCFCD Land Surveying Guidelines. Legal description includes "metes and bounds".
4. Abstracting and Title Report research. Obtain an Abstractor Certificate for each proposed acquisition parcel.

Geotechnical:

Below is a brief summary of the scope for the geotechnical engineer. Geotechnical investigations and reporting will be completed in accordance with the HCFCD Geotechnical Guidelines dated December 2010, or latest revision.

1. Site reconnaissance
2. Assist with identifying desired boring locations:

   A. For channel improvements (maximum spacing of 750 feet for borings)

      1. Approximately 11 bore holes expected for channel improvements.

      2. Additional bore hole locations for existing sheet pile weir. Assume 2.

      3. Additional bore hole near JV ground level water storage tank. Assume 1.

      Total borings for channel, weir, and storage tank= 11+2+1 = 14 {estimated}

   B. For bridge analysis

      1. US 290 EB FR bridge. Assume 2.
      2. US 290 WB FR bridge. Assume 2.
      3. Rio Grande St bridge. Assume 2.
      4. Senate Ave bridge. Assume 2.

      Total boring locations for bridges = 8 {estimated}.

3. Shall stake the borings so borings can be located by the surveyor.
4. Slope stability analysis (including short term condition, rapid drawdown condition, and long term conditions).
5. Erosion analysis and erosion protection recommendations {entire length of project limits}
6. Drilled Shaft and Driven Pile Analyses – axial compressive and tensile capacities, and lateral capacities.
7. Summary of local geology.
8. Assessment of dispersive nature of soils and recommendations for addressing dispersive soils if encountered.

REGULAR SESSION CITY COUNCIL MEETING PACKET FOR THE MEETING TO BE HELD ON SEPTEMBER 20, 2021

9. Determination if a Phase 1 geologic fault study is warranted
10. Perform laboratory analysis of field samples
11. Prepare Investigations Report with recommendations
12. Global stability check related to JV ground level water storage tank.
13. Construction considerations including pile drivability and vibration considerations and drilled shaft installation considerations.
14. Recommendations for specification of select fill, granular material, and riprap as necessary.

Environmental:

This section includes all required environmental surveys/documents associated with receiving a United States (U.S.) Army Corps of Engineers (USACE) Clean Water Act (CWA) Section 404 Permit for channel modifications to approximately 8,100 feet of E127 (a potentially jurisdictional waters of the U.S. [WOTUS]). Tasks associated with this effort include:

1. Delineation of Potentially Jurisdictional Water of the U.S. and Wetlands
    a. Because the project requires a USACE Section 404 permit, a delineation of potentially jurisdictional WOTUS and wetlands is required.
    b. The delineation will be performed in accordance with the resources below:
        i. 1987 USACE Wetland Delineation Manual and Regional Supplement (Atlantic and Gulf Coastal Plan Region (Version 2.0), 2010.
        ii. Harris County Flood Control District Tech Manuals, including Ordinary High Water Mark Manual.
    c. To account for potential compensatory mitigation needs, baseline functional assessments of delineated streams and wetlands will be performed using USACE standard operating procedures (SOPs). These SOPs include:
        i. Perform USACE Galveston District Interim Hydrogeomorphic (iHGM) Functional Analysis of existing wetlands.
        ii. Perform USACE Galveston District Stream Condition Assessment (Level 1 for less than 500 linear feet of impacts to ephemeral, intermittent, or perennial streams, Level 2 for greater than 500 linear feet of impacts to intermittent or perennial streams).
    d. Following the delineation, a report will be developed that summarizes findings and quantifies all water features within the study area. The report format will include all necessary supporting appendices and forms and will be suitable for USACE review.

Deliverables:

Draft and Final Delineation of Potentially Jurisdictional Waters of the U.S. and Wetlands Report

Assumptions:

- Assumes 5 days of field work for two AECOM staff.

REGULAR SESSION CITY COUNCIL MEETING PACKET FOR THE MEETING TO BE HELD ON SEPTEMBER 20, 2021

- It is assumed that AECOM will respond to one round of combined City of Jersey Village and Harris County Flood Control District comments.
- Right-of-Entry will be provided in a timely matter not to delay project schedules

2. Federally Listed Threatened and Endangered Species Habitat Assessment

    a. Because the project requires a USACE Section 404 permit, compliance with the Federal Endangered Species Act (ESA), the Migratory Bird Treaty Act, and the Bald and Golden Eagle Protection Act is required. This task is required to ensure the project does not adversely affect federally threatened and endangered (T&E) species, migratory birds, and/or directly or indirectly modify critical habitat of such species.

    b. The assessment will include a preliminary review of data from the U.S. Fish and Wildlife Service (USFWS), USFWS National Wetland Inventory (NWI), Texas Parks and Wildlife Department (TPWD) Natural Diversity Database (TXNDD), U.S. Geological Survey (USGS) topographic maps, Natural Resources Conservation Service (NRCS) soil data, aerial imagery, and other additional resources that may indicate the presence of potentially suitable T&E species habitat.

    c. A field investigation will be performed to identify potentially suitable T&E species and migratory bird species habitat within the project limits. Site conditions will be documented with regards to vegetation and any species observations or evidence of species habitat that is observed in the field. Any potentially suitable T&E species habitat will be delineated with a GPS unit (if observed).

    Deliverables:

    Draft and Final Federally Listed Threatened and Endangered Species Habitat Assessment Report

    Assumptions:

    - Habitat field investigation will be completed concurrently with the waters of the U.S. delineation.
    - No T&E presence/absence surveys or aquatic species relocation is required. If required, a separate scope and fee estimate will be submitted.
    - It is assumed that AECOM will respond to one round of combined City of Jersey Village and Harris County Flood Control District comments.
    - Right-of-Entry will be provided in a timely matter not to delay project schedules

3. Cultural Resources Survey

    a. Because the project requires USACE Section 404 permit, it constitutes a federal undertaking and is subject to review requirements under Section 106 of the National Historic Preservation Act of 1966, as amended. Under Section 106, and in accordance with the Advisory Council on Historic Preservation regulations pertaining to the protection of historic properties (36 Code of Federal Regulations [CFR] 800), prior to permit issuance or funding, federal agencies are required to locate, evaluate, and assess the effects of their undertaking on historic properties. Historic properties are defined as

REGULAR SESSION CITY COUNCIL MEETING PACKET FOR THE MEETING TO BE HELD ON SEPTEMBER 20, 2021

those properties that are included in, or eligible for inclusion in, the National Register of Historic Places (NRHP).

b. Since the project occurs on lands owned/controlled by the City of Jersey Village, which is a political subdivision of the State of Texas, it falls within the purview of the Antiquities Code of Texas (Texas Natural Resource Code, Title 9, Chapter 191). The Antiquities Code requires the Texas Historical Commission (THC) to review any actions that have the potential to disturb prehistoric or historic sites within the public domain of the State of Texas. Regulations pertaining to the code can be found within Title 13 Part 2, Chapter 26 of the Texas Administrative Code (TAC), Rules of Practice and Procedure. In accordance with 13 TAC 26.7(d)(2), the THC may require archaeological investigations to take place in all potentially affected areas of a project in order to identify potential impacts to cultural resources. Such investigations are regulated through an Antiquities permitting process that establishes the terms under which work may proceed. Thus, prior to any such fieldwork, an Antiquities Permit from the THC would be required, stipulating the conditions under which survey, discovery, excavation, demolition, restoration, or scientific investigations can occur.

c. In order to complete the USACE permitting and meet Antiquities Code requirements, a cultural resources survey of the project area will be performed in order to identify historic properties, State Antiquities Landmarks (SALs), and other cultural resources

(e.g., structures, buildings, archeological sites, cemeteries, and objects) that may be affected.

d. The survey will be conducted in accordance with archaeological survey standards for Texas set by the Council of Texas Archeologists (CTA) and the THC. All archaeological work will be supervised by archaeologists who meet the Secretary of the Interior's Professional Qualification Standards for Historic Preservation Projects (Department of the Interior, Archeology and Historic Preservation: Secretary of the Interior's Standards and Guidelines, 36 CFR 61). Any historic buildings, structures, objects, and potential historic districts that are 45 years of age or older and fall within or adjacent to the project area will be evaluated by an architectural historian.

e. Following completion of the fieldwork, a draft and final report of findings will be produced in conformance with CTA guidelines for cultural resources management reports. Once the report has been approved, the report will be distributed to the appropriate agencies. The archeologist will furnish the THC with one printed copy of the final report, which shall be an unbound copy containing at least one map with the plotted locations of any and all sites recorded, and two copies of a tagged PDF format of the report on an archival quality CD or DVD, one with the plotted locations of any and all sites recorded, and the other with redacted site location data.

f. Pursuant to 13 TAC 26.17, field records and photographs generated during archaeological field investigations will be prepared for permanent curation at an approved Texas curatorial facility. Any collected artifacts would also be prepared for curation according to relevant specifications after acceptance of the final report by the THC. Artifacts collected from publicly-owned land would be kept separate from those on privately-owned land.

REGULAR SESSION CITY COUNCIL MEETING PACKET FOR THE MEETING TO BE HELD ON SEPTEMBER 20, 2021

Deliverables:

Draft and Final Cultural Resources Survey Report

Assumptions:

- No more than five person days of field survey by two archeologists and two person days of survey by an architectural historian will be necessary
- No deep mechanical trenching will be required
- Assumes no more than 2 Texas Archeological Research Laboratory (TARL) Site Form Fees and 1/8-inch TARL Drawer Curation Fee
- Additional cultural resource investigations that may be required by THC as a result of this survey, such as site testing, data recovery, or survey beyond that currently scoped, would be requested, approved, and provided under a separate scope and fee estimate.
- No artifacts would be collected, and only records will be curated
- It is assumed that AECOM will respond to one round of combined City of Jersey Village and Harris County Flood Control District comments.
- Right-of-Entry will be provided in a timely matter not to delay project schedules

4. USACE Section 404 Permit Strategy Memo
    a. In order to determine the appropriate and most efficient USACE Section 404 permitting mechanism, a USACE Section 404 Permit Strategy Memo will be developed.
    b. The memo will:
        i. Quantify impacts to jurisdictional waters of the U.S. and wetlands (using a 30% design plan set and previously performed field delineation data)
        ii. Discuss potential avoidance and minimization options
        iii. Discuss the various permitting mechanisms, impact thresholds (Nationwide Permit [NWP] 43, NWP 27, and Individual Permit [IP]), and typical permit processing timelines.
        iv. Discuss compensatory mitigation options (if needed).

Deliverables:

Draft and Final USACE Section 404 Permit Strategy Memo

5. USACE Section 404 Permit Application
    a. Because approximately 8,100 feet of E127 will be impacted by project activities, a USACE Section 404 Permit will be required. As such, a pre-application meeting with the USACE Galveston District is recommended. At approximately the 30% design plan set, a meeting will be scheduled. A meeting agenda and applicable attachments and figures will be distributed to USACE attendees.

REGULAR SESSION CITY COUNCIL MEETING PACKET FOR THE MEETING TO BE HELD ON SEPTEMBER 20, 2021

b. Based on direction from the USACE Galveston District, the project will most likely qualify for either an NWP 43 (which authorizes Stormwater Management Facilities) or an IP.

c. A Section 404 permit application will be prepared. It will include all required documents and applicable attachments for a complete submittal.

d. The submittal will utilize the most up-to-date USACE Forms (acquired from the USACE Galveston District website) and other applicable attachments. The submittal will be suitable for USACE review.

e. If the USACE deems necessary, three additional documents will be required:

   i. Compensatory Mitigation Plan,

   ii. 404(b)(1) Alternative Analysis document (to document the least damaging practicable alternative),

   iii. TCEQ Tier II 401 Certification Questionnaire and Alternative Analysis Checklist

Deliverables:

Draft and Final USACE Galveston District Pre-Application Meeting Agenda w/ Attachments

Draft and Final Section 404 Permit Application (Either NWP 43 PCN or IP)

Draft and Final Compensatory Mitigation Plan

Draft and Final 404(b)(1) Alternative Analysis

Draft and Final Tier II 401 Certification Questionnaire and Alternative Analysis Checklist

Draft and Final USACE Interagency Review Team Comment Response Matrix

Draft and Final Public Notice Comment Response Matrix

Assumptions:

- Any loss of streams and/or wetlands will be compensated by purchasing in-stream and riparian buffer credits from mitigation banks with available credits. If the USACE deems on-site permittee responsible mitigation, additional scope and fee will be required to develop the on-site PRM plan.
- For each deliverable, it is assumed that AECOM will respond to one round of combined City of Jersey Village and Harris County Flood Control District comments.
- For the USACE Permit Application, it is assumed that AECOM will respond to two rounds of USACE/Interagency Review Team comments

Hazardous Materials:

1. Phase 1 Environmental Site Assessment (ESA) Report

   a. Because the project will require excavation and the potential need for drainage easement acquisition, a Phase I ESA Report is recommended. This report will

REGULAR SESSION CITY COUNCIL MEETING PACKET FOR THE MEETING TO BE HELD ON SEPTEMBER 20, 2021

b. The report will be consistent with the procedures included in American Society for Testing and Materials (ASTM) Practice E1527-13, Standard Practice for Environmental Site Assessments: Phase I Environmental Site Assessment Process.

c. Elements of the Phase I ESA will include a site visit, review of historical information, interviews with people familiar with the site including local government inquiries to obtain relevant information regarding the environmental conditions of the subject property, and review of compiled regulatory agency database information that may provide an indication of recognized environmental conditions, historical controlled recognized environmental conditions, and environmental risk on or near the subject property. The City of Jersey Village is the user of record. Reliance for the Phase I ESA will be "The City of Jersey Village, its partner entities, and AECOM."

d. Standard environmental record sources will be used to provide specified local, state, and federal regulatory lists information for potential sites of environmental concern located in the vicinity of the subject property. A database search will be performed, based upon ASTM specified standard record sources and search distance criteria. A vendor will be contacted to obtain the environmental database records.

e. A site visit will be performed to determine the existence of potentially hazardous materials or substances, pits, ponds, lagoons, stained soil, stressed vegetation, odors, uncontrolled dumping, and pools of liquid likely containing hazardous substances, discarded or unidentified substance containers or drums, and evidence of contamination to the extent possible given site specific access constraints. Topographic, geologic, hydrologic, and hydrogeologic conditions will be observed during the site reconnaissance to address contaminant migration routes.

f. Interviews with owners, occupants, or past owners or occupants, or others with knowledge of the uses and physical characteristics of the subject property, will be conducted, as necessary. The interviews will be conducted by telephone, mail, electronic communications, or in person during the site reconnaissance to obtain information pertaining to recognized environmental conditions of the subject property. Site questionnaires to key individuals with knowledge of the past history of the subject property will be developed and provided. Data collected and interviews performed will comply with ASTM Standard for Phase I Environmental Site Assessments E1527-13 and will meet the Environmental Protection Agency's (EPA) appropriate inquiry requirements.

g. Based on the site reconnaissance, interviews, and records review, a report will be developed to meet the latest ASTM standards for Phase I ESAs. The report will include field findings, records review findings, interview questionnaires, conclusions, and recommendations based on the research performed and results of the investigations conducted. Controlled recognized environmental conditions, historical recognized environmental conditions, and de minimis conditions will be identified based on the data collected and the results of the investigations performed during the Phase I ESA. Data gaps, exceptions, deviations, and references will be provided as part of the Phase I ESA report.

<u>Deliverables:</u>

Draft and Final Phase I Environmental Site Assessment Report (completed per ASTM E1527-13 Standards)

REGULAR SESSION CITY COUNCIL MEETING PACKET FOR THE MEETING TO BE HELD ON SEPTEMBER 20, 2021

Assumptions:

- The City of Jersey Village will provide any past environmental studies within or adjacent to the project boundary to assist in the identification of potential REC's.
- One meeting with the City of Jersey Village to review any Recognized Environmental Concerns (REC's) in connection with the property and recommendations.
- It is assumed that AECOM will respond to one round of combined City of Jersey Village and Harris County Flood Control District comments.
- Recommendations for additional surveys or sampling will be part of the transmittal letter and package sent to the City of Jersey Village that contains the draft Phase I ESA report.

Subsurface Utility Engineering (SUE):

1. Quality Level D - Review of utility research. Gather/acquire utility ownership information. Create Utility Table. Identify pipelines and ownership information. Draft an ACAD file of all Quality Level D utility linework as best interpreted from record drawings and available GIS databases.
2. Quality Level C – Review of topographic survey for utility features.
3. Prepare List of Utilities spreadsheet for PER. Acquire contact information for representative for each public and private utility company.
4. Submit an Existing Utility Base Map in general accordance with ASEC 38-02, Standard Guideline for the Collection and Depiction of Existing Subsurface Utility Data.

Hydrologic and Hydraulic Analysis (H&H):

The drainage subconsultant will develop alternatives to deepen and widen the E127 channel to convey the Atlas 14 100-year storm event. All drainage design will follow City of Jersey Village, HCFCD Hydrology and Hydraulics Guidance Manual, HCFCD Policy Criteria and Procedure Manual, and NRCS grant guidelines. Below is a brief summary of scope for the H&H design team:

1. Site reconnaissance to observe channel conditions, review scour history, review field survey of stream and bridges
2. Review existing studies, as-built plans, wetlands delineation, easements and ROW, GIS data and topographic mapping
3. Review FEMA FIRM and study, obtain FEMA effective models, coordinate with HCFCD and JV staff to obtain flood history of E127.
4. Investigate design alternatives to consider the depth need for trail under railroad and 290 bridges and due to possible limited ROW – recommend possible use of retaining walls
5. Coordinate with bridge engineer to determine maximum depth of excavation near existing bridge structures.
6. Verify and review existing drainage system outfalls
7. Perform both a hydrologic and hydraulic analysis. Review FEMA Effective White Oak Bayou HEC-HMS and HEC-RAS models.

REGULAR SESSION CITY COUNCIL MEETING PACKET FOR THE MEETING TO BE HELD ON SEPTEMBER 20, 2021

8. Update effective HEC-HMS models to Atlas 14 rainfall conditions and apply new flows to corrected effective HEC-RAS models.
9. Storage outflow HEC-RAS models shall be cycled with HEC-HMS models through each model condition to obtain convergence per HCFCD standards.
10. Create corrected effective models. Update "effective" models with topographic survey data.
11. Create Pre-Project conditions model. Update corrected effective model to reflect changes in watershed including US 290 bridges and detention.
12. Review E127 outlet weir structure. Check and update storage routing curves.
13. Create and analyze proposed design alternatives. Include in model considerations for Village Center Development. A total of 3 design alternatives will be analyzed.
14. Review and analyze updates to models related to bridges and culverts.
15. Determine proposed detention and weir outfall structure modifications necessary.
16. Provide alignment layout and profiles for proposed improvements.
17. Evaluate environmental and permitting impacts.
18. Assist with Preliminary Engineering Report which will include design alternatives and recommendation.
19. Develop floodplain mapping and inundation limits for existing and proposed conditions.
20. Prepare models, exhibits, and report for CLOMR and LOMR, as required.
21. Coordinate with City of Jersey Village and HCFCD.
22. Coordinate with TxDOT regarding hydraulic modeling within US 290 ROW.
23. Complete scour analysis at each existing bridge structure. Determine proposed riprap design/modifications at existing bridge structures.

Structural:

1. Site assessment and analysis of hydraulic capacity of existing bridges at the E127 crossing:
    a. US 290 EB Frontage Road
    b. US 290 WB Frontage Road
    c. Rio Grande St
    d. Senate Ave
    e. Sheet pile weir near confluence with E100
2. Review of TxDOT As-built record drawings for US 290 bridges
3. Review bridge BRINSAP reports.
4. Prepare Bridge Condition Assessment Reports
5. Design of new structures or modify existing structures if needed due to Atlas 14 hydraulics for:

REGULAR SESSION CITY COUNCIL MEETING PACKET FOR THE MEETING TO BE HELD ON SEPTEMBER 20, 2021

a. US 290 EB Frontage Road
b. US 290 WB Frontage Road
c. Rio Grande St E127 Crossing
d. Senate Ave E127 Crossing
e. Sheet pile weir near confluence with E100

6. Meet with UPRR to discuss ultimate E127 channel typical section and discuss potential impact to existing structure. A&F, JV and HCFCD will also discuss schedules with UPRR.
7. Retaining wall design associated with ground level water storage tank.
8. Retaining wall design associated with modifying existing detention pond if needed.

Civil:

1. Attend kickoff meeting with City of Jersey Village.
2. Coordinate with all subconsultants.
3. Develop and maintain Project Schedule.
4. Prepare monthly progress reports.
5. Schedule and attend coordination meetings with Jersey Village on monthly basis. Prepare meeting minutes.
6. Schedule and attend coordination meetings (assume 2) with HCFCD. Prepare meeting minutes.
7. Schedule and attend coordination meetings (assume 2) with TxDOT. Prepare meeting minutes.
8. Schedule and attend coordination meetings (assume 2) with Union Pacific Railroad. Prepare meeting minutes.
9. Schedule and attend coordination meetings with all subconsultants (assume 2 per subconsultant).
10. Monthly coordination with Grant Administration subconsultant.

Preliminary Engineering and PER

1. Site reconnaissance and Data Collection
2. Review of as-built plans, reports, and models from Jersey Village, HCFCD, and TxDOT
3. Review of all topographic survey information.
4. Review of all existing right-of-way information.
5. Review of digital terrain model.
6. Coordinate with Village Center Developer.
7. Schedule and attend coordination meeting to review existing H&H conditions. Discuss and coordinate existing H&H conditions with Structural TL.

REGULAR SESSION CITY COUNCIL MEETING PACKET FOR THE MEETING TO BE HELD ON SEPTEMBER 20, 2021

8. Schedule and attend coordination meeting to review proposed H&H improvements. Discuss and coordinate proposed H&H improvements with Structural TL.
9. Schedule and attend coordination meeting to review existing conditions of structures including bridges, trestle, box culvert weir, sheet pile weir, and Jersey Village ground level water storage tank.
10. Schedule and attend coordination meeting to review proposed improvements to structures for all items mentioned above.
11. Review of geotechnical investigation report. Coordinate results of geotechnical analyses with H&H TL and Structures TL.
12. Review of Phase 1 environmental site assessment report.
13. Review of subsurface utility engineering Utility Table, including monthly updates.
14. Review of parcel acquisition exhibits and documents from surveyor.
15. Prepare Preliminary Engineering Report. See specific items related to PER below.
16. Schedule and attend Draft PER review comment meeting with Jersey Village and HCFCD
17. Review Draft PER {H&H} comments.
18. Review Draft PER {H&H and Structures} comments.
19. Address all Draft PER review comments. Prepare Final PER.

Preliminary Engineering Report

1. The Preliminary Engineering Report shall include the following:
   A. Executive Summary (Present findings and recommendations)
   B. Project Introduction
   C. Existing Conditions and Findings from Preliminary Design Activities (Discuss reports reviewed, existing land use, geotechnical conditions, and environmental conditions in addition to items below:)
      1. Existing Conditions of Right-of-way and Topographic Information
      2. Existing public and private utilities, including pipelines
      3. Preliminary List of Utilities and Ownership information
      4. Existing Conditions of Pavement
      5. Existing Conditions of Bridges
         A. Jersey Village
         B. TxDOT
         C. Union Pacific Railroad
      6. Existing Traffic Volumes on Streets with Bridges over Channel
      7. Existing Condition Drainage Analysis

   D. Proposed Conditions, Evaluations, and Recommendations
      1. Proposed ROW / Property Acquisition
      2. Proposed public and private utilities
      3. Proposed Pavement

REGULAR SESSION CITY COUNCIL MEETING PACKET FOR THE MEETING TO BE HELD ON SEPTEMBER 20, 2021

4. Proposed Bridges
    A. Jersey Village (Rio Grande St and Senate Ave)
    B. TxDOT
    C. Union Pacific Railroad
5. Proposed Traffic Control for Bridge Closures
6. Proposed Condition Drainage Analysis
7. Proposed trail amenities

E. H&H Report Summary – to include H&H analysis assessing existing and proposed conditions per HCFCD standards
F. Geotechnical Investigation – Summarize findings and recommendations made by geotechnical engineer.
G. Environmental Site Assessment – Summarize findings and recommendations. Include whether or not an ESA Phase 2 is recommended.
H. Tree/Landscape Impacts and Protection
I. Floodplain/Floodway
J. Jurisdictional Determination – Identify all agencies, public and private, railroads, etc. having jurisdiction over project design.
K. Interagency coordination – Discuss previous and ongoing coordination with agencies.
L. Estimated Construction Cost
M. Appendices
    1. Right-of-way
    2. Site Photographs
    3. Complete H&H Analysis Report to include hydrologic and hydraulic analysis output tables, proposed drainage area maps, detention pond exhibits, proposed typical channel sections, and preliminary scour analysis. Floodplain and inundation maps showing the existing and proposed limits shall also be included.
    4. Complete Geotechnical Investigation Report
    5. Complete Phase 1 Environmental Site Assessment Report

2. Include 30% Design plans in the PER. 30% Design plans will be 11”x17” and shall include the following:

    A. Cover Sheet

    B. Location Map
    C. Sheet Index
    D. Overall Project Layout (PL) Sheets
    E. Existing Conditions Floodplain Map
    F. Existing Conditions Inundation Map
    G. Proposed Conditions Floodplain Map
    H. Proposed Conditions Inundation Map
    I. Survey Control Data (CC) Summary Sheets
    J. Baseline Geometry (CBL) Sheets
    K. Typical Section – Channel
    L. Typical Section - Trail
    M. Plan View Sheets
    N. Profile View Sheets

REGULAR SESSION CITY COUNCIL MEETING PACKET FOR THE MEETING TO BE HELD ON SEPTEMBER 20, 2021

O. Bridge Layouts
P. Bridge Hydraulic Data Sheets
Q. Channel Hydraulic Data Sheets
R. Drainage Area Maps
S. Bicycle Trail Overall Layout (BBL) Sheets
T. Bicycle Trail Sheets
U. Existing Utility Base Map {SUE}
V. Tree Removal and Tree Protection Sheets

Final Design

Once the Preliminary Engineering Report is accepted by the City of Jersey Village and HCFCD, and then approved in Commissioner's Court, the project will move into the Final Design Phase. Aguirre & Fields and team will take the PER recommendations and meet with City of Jersey Village to verify and confirm direction of Final Design. A&F will then provide a Final Design & Bid Document scope and fee proposal.

Construction Phase Services and CEI

Upon request, A&F will also provide a CPS and CEI scope and fee proposal.

REGULAR SESSION CITY COUNCIL MEETING PACKET FOR THE MEETING TO BE HELD ON SEPTEMBER 20, 2021

Fee Schedule

White Oak Bayou Federal Flood Damage Reduction Project
E127-00-00 Channel Modifications from Jones Road to E100

A&F: Civil & Structural

TASKS	No of Shts	Project Manager	Deputy Project Manager	Quality Manager	Sr. Structural Engineer	Structural Engineer	Structural EIT	Senior Engineer	Design Engineer	Engineer-in-Training	Senior CADD Operator	CADD Operator	Admin / Clerical	Sr. Const Project Manager	Project Manager I	Const Inspector III	Const Inspector II	Const Inspector I	SUBTOTAL HOURS	TOTAL FEE
		$267.00	$215.00	$260.00	$241.00	$195.00	$114.00	$221.00	$160.00	$114.00	$163.00	$85.00	$114.00	$250.00	$200.00	$125.00	$120.00	$110.00		
PLANS, PROJECT MANUAL, & ESTIMATES		245	341	34	188	293		166	0	232	44	401	24							
Preliminary Engineering / Preliminary Engineering Report																				
Project Management, Coordination, and Admin																				
Kickoff Meeting		3	3		1	1													8	$1,882.00
Project Management (Assumed 8 months)		60	72		8					0									140	$33,428.00
Develop and Maintain Project Schedule		4	8																12	$2,788.00
Monthly Progress Reports (Assumed 8 Reports)		8			4								8						20	$4,012.00
Meetings with Jersey Village (Assumed 1 per mo for 8 months) and Prepare Mtg Mins		12	16							0									28	$6,644.00
Meetings with HCFCD (Assumed 2) and Prepare Mtg Mins		6	9		4					4									23	$4,957.00
Meetings with TxDOT (Assumed 2) and Prepare Mtg Mins		6	9		4					4									23	$4,957.00
Coordination and Meetings with Union Pacific		8	16		8					0									32	$7,504.00
Coordination and Meetings with Village Center Developer		12	12							0									24	$5,784.00
Joint Agency Meetings with JV, HCFCD and TxDOT (Assumed 1) incl. Mtg Mins		4	4																8	$1,928.00
Monthly Invoicing (8 Invoices)		8	4										16						28	$4,820.00
Coordination Meetings with subconsultants (2 per sub)		6	10							6									22	$4,436.00
H&H Design Concept Meeting (Assumed 2)		6	6																12	$2,892.00
Coordination with Grant Administration (Assumed for 8 months)		4	10																14	$3,218.00
Subtotal Project Management Services																				**$89,250.00**
Preliminary Engineering																				
Data Collection and Field Reconnaissance		8	8		14	14	14												58	$11,556.00
Review of As-Builts, Reports, Models		4	8		2	4	12			24									54	$8,154.00
Existing Conditions Meeting with H&H		2	2		4	4	0												12	$2,708.00
Proposed Conditions Meeting with H&H		2	2																4	$964.00
Existing Conditions Meeting with Structures		2	2		2	2	0												8	$1,836.00
Proposed Conditions Meeting with Structures		2	2		2	2	0												8	$1,836.00
Existing Right-of-way Meeting with Surveyor		2	2																4	$964.00
Review of Topographic Survey information		2	2					0		8	14								26	$4,158.00
Review of Right-of-way information		1	2					6			6								15	$3,001.00
Review of Digital Terrain Model (DTM)		1						2			14								17	$2,991.00
Review Geotechnical report			2		2	4	0	0											8	$1,692.00
Review Environmental report			1					1											2	$436.00
Coordination with SUE		4	4					8				14							30	$4,886.00
Review of SUE Utility Table (including monthly updates)		2	2					8											12	$2,732.00
Review of Parcel Acquisition Documents from Surveyor			2	4				8											14	$3,238.00
																				$51,152.00
Plan Production (for Draft PER) (H&H only)																				
Cover Sheet	1	1						1				3							5	$743.00
Location Map	1							1				3							4	$476.00
Sheet Index	1											1							1	$85.00
Overall Project Layout (PL) Sheets	4		1					1				4							6	$776.00
Existing Conditions Floodplain Map (by H&H)	1			2															2	$520.00
Existing Conditions Inundation Map (by H&H)	1			2															2	$520.00
Proposed Conditions Floodplain Map (by H&H)	1			2															2	$520.00
Proposed Conditions Inundation Map (by H&H)	1			2															2	$520.00
Survey Control Data (CC) Summary Sheets (By surveyor)	20			2															2	$520.00
Baseline Geometry (CBL) Sheets (By Surveyor)	2			2															2	$520.00
Typical Section(s) - Channel	1		1					1				3							5	$691.00
Typical Section - Trail	1		1					1				3							5	$691.00
Plan View Sheets	20		4					12		20		40							76	$9,192.00
Profile View Sheets	20		4					12		20		40							76	$9,192.00
Bicycle Trail Overall Layout (BBL) Sheets	2		1					2		4		16							23	$2,473.00
Bicycle Trail (BT) Sheets	10		4					12		20		40							76	$9,192.00
Detention Pond Layout Sheets	2	1						8		12		16							37	$4,763.00
Review Draft Parcel Acquisition Exhibits and Documents		4		4															8	$2,108.00
Prepare Draft PER write up		8	16					8			0								32	$7,344.00
QC Draft PER		1		4															5	$1,307.00
																				$52,153.00
Plan Production (for Draft PER) (H&H and Structures)																				
Review Draft PER review comments related to H&H		4	8		4														16	$3,752.00
Bridge Layout - Senate Ave and Rio Grande - 2 bridges	2	1			8	14	40												63	$9,485.00
Quantity Summary - Cost Estimate					4	14	32												50	$7,342.00
Bridge Conditions Assessment Reports					12	24	36												72	$11,676.00
Bridge Layout - EB and WB 290 Frontage Rd (3-span slab beam bridge)	2	1			8	14	40												63	$9,485.00
Quantity Summary - Cost Estimate					4	14	32												50	$7,342.00
Wall Layout and Design					8	20	32												60	$9,476.00
Bridge Approach Slab Details	1				8	20	32												60	$9,476.00
Weir Upstream of Rio Grande bridge	1	1			8	16	36												61	$9,419.00
Sheet Pile Weir Upstream of Confluence with E100	1				8	16	36												60	$9,152.00
Retaining Wall Layout for Ground Level Water Storage Tank	1	1			12	16	36												65	$10,383.00
Update Draft PER write up with Structures info		2	12		2	8													24	$5,156.00
QC Draft PER with Structures update		1		2															3	$787.00
																				$102,931.00

REGULAR SESSION CITY COUNCIL MEETING PACKET FOR THE MEETING TO BE HELD ON SEPTEMBER 20,

Fee Schedule

	Plan Production (for Final PER)																					
	Review Comment Meeting with JV and HCFCD			3	3		3														9	$2,169.00
	Address Draft PER review comments				4			4		8			2	16							34	$5,094.00
	Typical Section(s) - Channel		1		1					1				3							5	$691.00
	Typical Section - Trail		1		1					1				3							5	$691.00
	Plan View Sheets		20		4					16		24		40							84	$10,532.00
	Profile View Sheets		20		4					16		24		40							84	$10,532.00
	Bicycle Trail Overall Layout (BBL) Sheets		2		1					2		4		12							19	$2,133.00
	Bicycle Trail Alignment Table (AT) Sheets		2		1					2		4		12							19	$2,133.00
	Bicycle Trail (BT) Sheets		10		4					12		24		40							80	$9,648.00
	Detention Pond Layout Sheets		2	1						8		12		16							37	$4,763.00
	Tree Removal and Tree Protection Sheets		20		2					8		12		16							38	$4,926.00
	Bridge Layout - Senate Ave and Rio Grande - 2 bridges		2	1			2	6	10												19	$3,059.00
	Quantity Summary - Cost Estimate						2	6	16												24	$3,476.00
	Bridge Conditions Assessment Reports						2	8	2												12	$2,270.00
	Bridge Layout - EB and WB 290 Frontage Rd (3-span slab beam bridge)		2	1			2	6	10												19	$3,059.00
	Quantity Summary - Cost Estimate						2	6	16												24	$3,476.00
	Wall Layout and Design						4	6	10												20	$3,274.00
	Bridge Approach Slab			1			2	10	16												29	$4,523.00
	Weir Upstream of Rio Grande bridge		1	1			6	8	24												39	$6,009.00
	Sheet Pile Weir Upstream of Confluence with E100		1	1			6	8	24												39	$6,009.00
	Retaining Wall Layout for Ground Level Water Storage Tank		1	1			6	8	24												39	$6,009.00
	TxDOT Bridge Standards		12	1			2	6	24												33	$4,655.00
	Review Final Parcel Acquisition exhibits and documents			4		4															8	$2,108.00
	Prepare FINAL PER write up			12	20		2	4													38	$8,766.00
	QC Final PER			1		4															5	$1,307.00
																						$111,312.00
	Subtotal Preliminary Engineering / P.E.R.																					**$317,548.00**
	Prep Work for Community Outreach Meeting																					
	Plan, Prepare & Attend Community Outreach Planning Meeting		0	3	3		3							4							13	$2,509.00
	Prepare Exhibits / Create PDFs			2	8				4			6	8	16							44	$6,058.00
	PowerPoint Presentation		0	4	10																14	$3,218.00
	Video		0																		0	$0.00
	Attend Community Outreach Meeting		0	3	3		3														9	$2,169.00
	Subtotal Community Outreach																					**$13,954.00**

Subtotal Preliminary Engineering - Project Management Services	$89,250.00	
Subtotal Preliminary Engineering / P.E.R.	$317,548.00	
Subtotal Community Outreach	$13,954.00	
Subtotal Final Design Management	$0.00	
Subtotal Final Design - Plan Production	$0.00	
		$420,752.00
Subtotal Bid Phase	$0.00	
Subtotal Construction Phase Services, Const Proj Mgmt, and Const Insp.	$0.00	
Subtotal CE&I Expenses (Trucks, Phones, Computers for 12 months)	$0.00	
		$0.00
Surveying & ROW Acquisition	$213,994.24	
Survey & ROW Acquisition Coordination	$17,119.54	$231,113.78
Grant Admin/H&H Support	$38,160.00	
Grant Admin/H&H Support Coordination	$3,052.80	$41,212.80
Geotechnical	$182,712.00	
Geotechnical Coordination	$14,616.96	$197,328.96
Environmental (incl. Expenses)	$134,777.00	
Environmental Coordination	$10,782.16	$145,559.16
SUE	$8,595.00	
SUE Coordination	$687.60	$9,282.60
H&H	$315,040.00	
H&H Coordination	$25,203.20	$340,243.20
TOTAL=		**$1,385,492.50**

REGULAR SESSION CITY COUNCIL MEETING PACKET FOR THE MEETING TO BE HELD ON SEPTEMBER 20,

Fee Schedule

White Oak Bayou Federal Flood Damage Reduction Project
E127-00-00 Channel Modifications from Jones Road to E100

Geotech

	TASKS	Quantity	Unit of Measurement	Principal	Senior Engineer, P.E.	Graduate Engineer or Geologist	Engineering Assistant	SUBTOTAL HOURS		TOTAL FEE
				$250.00	$205.00	$115.00	$70.00			
	PLANS, PROJECT MANUAL, & ESTIMATES									
	Preliminary Engineering / Preliminary Engineering Report									
	Project Management, Coordination, and Admin									
	Kickoff Meeting							0		$0.00
	Project Management {Assumed 8 months}							0		$0.00
	Develop and Maintain Project Schedule							0		$0.00
	Monthly Progress Reports (Assumed 8 Reports)							0		$0.00
	Meetings with Jersey Village {Assumed 1 per mo for 8 months} and Prepare Mtg Mins							0		$0.00
	Meetings with HCFCD (Assumed 2) and Prepare Mtg Mins							0		$0.00
	Meetings with TxDOT (Assumed 2) and Prepare Mtg Mins							0		$0.00
	Coordination and Meetings with Union Pacific							0		$0.00
	Coordination and Meetings with Village Center Developer							0		$0.00
	Joint Agency Meetings with JV, HCFCD and TxDOT (Assumed 1) incl. Mtg Mins							0		$0.00
	Monthly Invoicing (8 Invoices)							0		$0.00
	Coordination Meetings with subconsultants (2 per sub)							0		$0.00
	H&H Design Concept Meeting (Assumed 2)							0		$0.00
	Coordination with Grant Administration {Assumed for 8 months}							0		$0.00
	Subtotal Project Management Services									**$0.00**
	Preliminary Engineering									
	Field Exploration									
	Field Reconnaissance and Coordination				4	20		24		$3,120.00
	Drill Rig Mobilization	1	EA					0		$700.00
	Drill Rig Mobilization - ATV Surcharge	1	EA					0		$250.00
	Drill Footage - ATV Surcharge	1395	LF					0	$10	$13,950.00
	Soil Boring, Continuous 3-in. (0' to 20')	600	LF					0	$25	$15,000.00
	Soil Boring, Intermittent 3-in. (20' to 45'/90')	795	LF					0	$23	$18,285.00
	Piezometer Installation 4 @ 35'; 4 @ 80'	460	LF					0	$24	$11,040.00
	Logger & GWL Data (by Engineering Assistant)	160	HRS					0	$90	$14,400.00
	Site Clearing (at cost plus 10%), 3 days @ $2100/day (estimated if needed)	2	DAYS					0	$2,100	$4,200.00
	Vehicle Charge	180	HRS					0	$12	$2,160.00
	Subtotal Field Exploration									**$83,105.00**
	Laboratory Testing									
	Liquid & Plastic Limits	161	EA					0	$71	$11,431.00
	Moisture Content of Soils by Mass	403	EA					0	$11	$4,433.00
	Sieve Analysis	22	EA					0	$65	$1,430.00
	Percentage Fines	147	EA					0	$55	$8,085.00
	Unconfined Compressive Strength	37	EA					0	$51	$1,887.00
	Crumb Test	73	EA					0	$43	$3,139.00
	Double Hydrometer	22	EA					0	$250	$5,500.00
	Unconsolidated-Undrained Triaxial Test	55	EA					0	$72	$3,960.00
	OMD Standrd Compaction	7	EA					0	$231	$1,617.00
	Consolidated Undrained Triaxial Test	9	EA					0	$900	$8,100.00
	Subtotal Laboratory Testing									**$49,582.00**
	Engineering Analysis and Report			30	45	250	65	390		$50,025.00
	Subtotal Engineering Analysis and Report									**$50,025.00**
								0		$0.00
	Total Geotechnical Services									**$182,712.00**

Subtotal Preliminary Engineering - Project Management Services	$0.00
Subtotal Preliminary Engineering / P.E.R.	$0.00
Subtotal Community Outreach	$0.00
Subtotal Final Design Management	$0.00
Subtotal Final Design - Plan Production	$0.00
Subtotal Bid Phase	$0.00
Subtotal Construction Phase Services, Const Proj Mgmt, and Const Insp.	$0.00
Subtotal CE&I Expenses (Trucks, Phones, Computers for 12 months)	$0.00

Surveying & ROW Acquisition	
Survey & ROW Acquisition Coordination	
Grant Admin	
Grant Admin Coordination	
Geotechnical	$182,712.00
Geotechnical Coordination	$14,616.96
Environmental (incl. Expenses)	
Environmental Coordination	
SUE	
SUE Coordination	
H&H	
H&H Coordination	
	$197,328.96
	$197,328.96

REGULAR SESSION CITY COUNCIL MEETING PACKET FOR THE MEETING TO BE HELD ON SEPTEMBER 20,

Fee Schedule

White Oak Bayou Federal Flood Damage Reduction Project
E127-00-00 Channel Modifications from Jones Road to E100

	TASKS		Principal	Sr. Env Project Manager	Project Manager	Ecologist II	Ecologist I	Sr. Historian	Sr. Arch	Arch Principal Investigator	Arch II	Historian II	Remediation PM	Env Scientist II	GIS Specialist II	Admin / Clerical	Admin III	TOTAL HOURS	Enviro. TOTAL COST
		No of Shts	$185.00	$185.00	$151.00	$92.00	$76.00	$140.00	$100.00	$125.00	$92.00	$100.00	$165.00	$98.00	$85.00	$55.00	$81.00		
	PLANS, PROJECT MANUAL, & ESTIMATES																		
	Environmental Permitting Tasks																		
	Env Tasks																		
1	Waters of the U.S./ Wetlands Delineation		1	2	8	60	60								20	1	2	154	$13,760.00
2	Federally Listed T&E Assessment		1	2	4	24	24								8	1	2	66	$6,088.00
3	Cultural Resources Survey							8	56	90	96	40			20	1	1	312	$32,638.00
4	USACE Section 404 Permit Strategy Memo		1	4	24											1	1	31	$4,685.00
5.1	USACE Pre-Application Meeting			8	16					8					8	1	1	42	$5,712.00
5.2	USACE Section 404 Permit Application		1	10	40										24	1	2	78	$10,332.00
5.3	Compensatory Mitigation Plan			2	24	24									8	1	2	61	$7,099.00
5.4	404(b)(1) Alternative Analysis			8	24	40									14	1	2	89	$10,191.00
5.5	Tier II 401 Certification Questionnaire and Alt Analysis			6	16	32									8	1	2	65	$7,367.00
5.6	USACE Comment Response Matrix		1	4	16	24										1		46	$5,604.00
5.7	Public Notice Comment Response Matrix			8	20	24										1		53	$6,763.00
6	Phase I ESA		1	2	12								32	90	16	1		154	$17,882.00
	SUBTOTAL		6	66	216	228	84	8	56	102	96	64	32	100	128	12	15	1213	**$128,121.00**
	ODCs																		
	Lodging ($96 x 14 nights)	$1,344.00																	
	Vehicle Rental ($70 x 28 days)	$1,960.00																	
	Fuel for rental ($2.75 X 200 gallons)	$550.00																	
	Meals ($55 x 25)	$1,350.00																	
	Miscellaneous	$150.00																	
	Printing (Cultural Resources Submittal to THC)	$100.00																	
	Shipping (for Cultural Resource Submittal to THC)	$150.00																	
	TARL Site forms ($96 x 2)	$192.00																	
	TARL Curation fee (1/8 drawer; records only)	$460.00																	
	Hazmat database radius report	$400.00																	
	Total	**$6,656.00**																	
	Total (Labor + ODCs)	**$134,777.00**																	

Subtotal Preliminary Engineering - Project Management Se	$0.00
Subtotal Preliminary Engineering / P.E.R.	$0.00
Subtotal Community Outreach	$0.00
Subtotal Final Design Management	$0.00
Subtotal Final Design - Plan Production	$0.00
Subtotal Bid Phase	$0.00
Subtotal Construction Phase Services, Const Proj Mgmt, a	$0.00
Subtotal CE&I Expenses (Trucks, Phones, Computers for 1	$0.00

Surveying & ROW Acquisition	
Survey & ROW Acquisition Coordination	
Grant Admin	
Grant Admin Coordination	
Geotechnical	
Geotechnical Coordination	
Environmental (incl. Expenses)	$134,777.00
Environmental Coordination	$10,782.16
SUE	
SUE Coordination	
H&H	
H&H Coordination	
	$145,559.16

REGULAR SESSION CITY COUNCIL MEETING PACKET FOR THE MEETING TO BE HELD ON SEPTEMBER 20,

Fee Schedule

White Oak Bayou Federal Flood Damage Reduction Project
E127-00-00 Channel Modifications from Jones Road to E100

Grant Admin.

	TASKS		Project Manager	Quality Manager	Senior Engineer	Design Engineer	Engineer-in-Training	Engineer Tech	CADD Operator	Admin / Clerical	Senior Environmental Scientist	Environmental Scientist	TOTAL HOURS	TOTAL COST
		No of Shts	$220.00	$0.00	$220.00	$165.00	$120.00	$125.00	$110.00	$90.00	$154.00	$120.00		
	PLANS, PROJECT MANUAL, & ESTIMATES													
	Preliminary Engineering / Preliminary Engineering Report													
1	Project Management, Coordination, and Admin													
1.1	Kickoff Meeting												0	$0.00
1.2	Site reconnaissance												0	$0.00
1.3	Develop and Maintain Project Schedule		2										2	$440.00
1.4	Monthly Progress Reports												0	$0.00
1.5.1	Meetings with Jersey Village		4										4	$880.00
1.5.2	Meetings with HCFCD												0	$0.00
1.5.3	Meetings with TxDOT												0	$0.00
1.5.4	Meetings with Union Pacific												0	$0.00
1.5.5	Meetings with Village Center Developer												0	$0.00
													0	$0.00
	Invoices		12							24			36	$4,800.00
	Coordination Meetings with subconsultants												0	$0.00
	H&H Design Concept Meeting												0	$0.00
	Structures Design Concept Meeting												0	$0.00
	Coordination with Grant Administration		12										12	$2,640.00
	1. Update the current grant workplan schedule to include revised schedules for the project.										12		12	$1,848.00
	30-days of the end of the first Federal quarter following the initial grant agreement. Quarterly Federal Financial Reports (FFR) will be submitted until the grant ends. A final FFR will be submitted 90 days after the end date of the performance										24	80	104	$13,296.00
	3. Program Performance Reports (SF-PPR) will be submitted within 30-days of the end of each quarter following the initial grant agreement. Quarterly Program Performance Reports (PPR) will be submitted until the grant ends. A final FFR will be submitted 90 days after the end date of the performance										24	88	112	$14,256.00
													0	$0.00
	SUBTOTAL												0	**$38,160.00**
													TOTAL=	**$38,160.00**

Subtotal Preliminary Engineering - Project Management Services	$0.00
Subtotal Preliminary Engineering / P.E.R.	$0.00
Subtotal Community Outreach	$0.00
Subtotal Final Design Management	$0.00
Subtotal Final Design - Plan Production	$0.00
Subtotal Bid Phase	$0.00
Subtotal Construction Phase Services, Const Proj Mgmt, and Const	$0.00
Subtotal CE&I Expenses (Trucks, Phones, Computers for 12 month	$0.00

Surveying & ROW Acquisition	
Survey & ROW Acquisition Coordination	
Grant Admin	$38,160.00
Grant Admin Coordination	$3,052.80
Geotechnical	
Geotechnical Coordination	
Environmental (incl. Expenses)	
Environmental Coordination	
SUE	
SUE Coordination	
H&H	
H&H Coordination	
	$41,212.80
	$41,212.80

REGULAR SESSION CITY COUNCIL MEETING PACKET FOR THE MEETING TO BE HELD ON SEPTEMBER 20,

Fee Schedule

White Oak Bayou Federal Flood Damage Reduction Project
E127-00-00 Channel Modifications from Jones Road to E100

H&H

	TASKS	No of Shts	Principal $250.00	Sr. Project Manager $220.00	Project Manager $175.00	Quality Manager $230.00	Senior Engineer $230.00	Design Engineer $160.00	Engineer-in-Training $135.00	Engineer Tech $125.00	Senior CADD Operator $130.00	CADD Operator $110.00	Admin / Clerical $80.00	SUBTOTAL HOURS	TOTAL FEE	
	PLANS, PROJECT MANUAL, & ESTIMATES		168	1042	44	134	12		872	0	336	0	16			
	Preliminary Engineering / Preliminary Engineering Report															
	Project Management, Coordination, and Admin															
	Kickoff Meeting		4	4										8	$1,880.00	
	Project Management {Assumed 8 months}			8					8					16	$2,840.00	
	Develop and Maintain Project Schedule													0	$0.00	
	Monthly Progress Reports (Assumed 8 Reports)			24										24	$5,280.00	
	Meetings with Jersey Village {Assumed 1 per mo for 8 months} and Prepare Mtg Mins		12	12										24	$5,640.00	
	Meetings with HCFCD (Assumed 2) and Prepare Mtg Mins		12	12										24	$5,640.00	
	Meetings with TxDOT (Assumed 2) and Prepare Mtg Mins		8	8										16	$3,760.00	
	Coordination and Meetings with Union Pacific		8	8										16	$3,760.00	
	Coordination and Meetings with Village Center Developer		8	8										16	$3,760.00	
	Joint Agency Meetings with JV, HCFCD and TxDOT (Assumed 1) incl. Mtg Mins													0	$0.00	
	Monthly Invoicing (8 Invoices)		4	8									8	20	$3,400.00	
	Coordination Meetings with subconsultants (2 per sub)													0	$0.00	
	H&H Design Concept Meeting (Assumed 2)		12	12										24	$5,640.00	
	Coordination with Grant Administration {Assumed for 8 months}		8	8										16	$3,760.00	
	Subtotal Project Management Services		76	112	0	0	0	0	8	0	0	0	8	204	**$45,360.00**	
	Preliminary Engineering															
	Data Collection and Field Reconnaissance			24					24					48	$8,520.00	
	Review of As-Builts, Reports, Models			24					24					48	$8,520.00	
	Investigate Design Alternatives			24				28	28					80	$13,540.00	
	Verify and Review Existing Drainage Outfalls			12				24	24					60	$9,720.00	
	Update Hydrology to ATLAS 14			8		2		12	12					34	$5,760.00	
	Update HEC-RAS with Topographic Survey Data & Existing Weir Structure			28		4		32	32					96	$16,520.00	
	Cycle Corrected Effective Model			6		2		14	14					36	$5,910.00	
	Create Pre-Project Models			28		4		36	36					104	$17,700.00	
	Cycle Pre-Project Models			6		2		14	14					36	$5,910.00	
	Existing Conditions Meeting with H&H			8				8						16	$3,040.00	
	Create Post-Project Models (Max of 3 Alternatives)			36		12		72	72					192	$31,920.00	
	Cycle Post-Project Models			24		4		40	40					108	$18,000.00	
	Proposed Conditions Meeting with H&H			8				8						16	$3,040.00	
	Review and Analyze Bridge/Culvert Updates			20		4		36	36					96	$15,940.00	
	Determine Proposed Detention and Weir Modifications			12		2		24	24					62	$10,180.00	
	Develop Proposed Channel Alignment & Profile			20		1		20			40			81	$13,030.00	
	Evaluate Environmental & Permitting Impacts			8				8						16	$3,040.00	
	Develop Drainage Report for PER			24		6		32			40			102	$16,980.00	
	Develop Floodplain & Inundation Limits			24		2		24						50	$9,580.00	
	Complete Scour Analysis & RipRap Design			24		12		40	40					116	$19,840.00	
	Existing Conditions Meeting with Structures													0	$0.00	
	Existing Right-of-way Meeting with Surveyor													0	$0.00	
	Review of Topographic Survey information													0	$0.00	
	Review of Right-of-way information													0	$0.00	
														0	$0.00	
	Review Geotechnical report													0	$0.00	
	Review Environmental report													0	$0.00	
	Coordination with SUE													0	$0.00	
	Review of SUE Utility Table													0	$0.00	
																$236,690.00

REGULAR SESSION CITY COUNCIL MEETING PACKET FOR THE MEETING TO BE HELD ON SEPTEMBER 20,

	Plan Production (for Draft PER) {H&H only}														
	Cover Sheet	1											0	$0.00	
	Location Map	1											0	$0.00	
	Sheet Index	1											0	$0.00	
	Overall Project Layout (PL) Sheets	4											0	$0.00	
	Existing Conditions Floodplain Map (by H&H)	1		4		2					16		22	$3,420.00	
	Existing Conditions Inundation Map (by H&H)	1		4		2					16		22	$3,420.00	
	Proposed Conditions Floodplain Map (by H&H)	1		4		2					16		22	$3,420.00	
	Proposed Conditions Inundation Map (by H&H)	1		4		2					16		22	$3,420.00	
	Survey Control Data (CC) Summary Sheets (By surveyor)	20											0	$0.00	
	Baseline Geometry (CBL) Sheets (By Surveyor)	2											0	$0.00	
	Typical Section(s) - Channel	1											0	$0.00	
	Typical Section - Trail	1											0	$0.00	
	Plan View Sheets	20											0	$0.00	
	Profile View Sheets	20											0	$0.00	
	Bicycle Trail Overall Layout (BBL) Sheets	4											0	$0.00	
	Bicycle Trail (BT) Sheets	20											0	$0.00	
	Detention Pond Layout Sheets	2											0	$0.00	
	Bridge Hydraulic Data Sheets	16											0	$0.00	
	Channel Hydraulic Data Sheets	2											0	$0.00	
	Drainage Area Maps	1											0	$0.00	
	Review Draft Parcel Acquisition Exhibits and Documents												0	$0.00	
	Prepare Draft PER write up												0	$0.00	
	QC Draft PER												0	$0.00	
															$13,680.00
	Plan Production (for Draft PER) {H&H and Structures}														
	Review Draft PER review comments related to H&H												0	$0.00	
	Bridge Layout - Senate Ave and Rio Grande - 2 bridges	2											0	$0.00	
	Quantity Summary - Cost Estimate												0	$0.00	
	Bridge Conditions Assessment Reports												0	$0.00	
	Bridge Layout - EB and WB 290 Frontage Rd (3-span slab beam bridge)	2											0	$0.00	
	Quantity Summary - Cost Estimate												0	$0.00	
	Wall Layout and Design												0	$0.00	
	Bridge Conditions Assessment Reports												0	$0.00	
	Bridge Layout - EB and WB 290 Mainlanes	2											0	$0.00	
	Quantity Summary - Cost Estimate												0	$0.00	
	Wall Layout and Design												0	$0.00	
	Bridge Conditions Assessment Report												0	$0.00	
	Bridge Layout - UPRR Main and Shoofly Bridges	2											0	$0.00	
	Quantity Summary - Cost Estimate												0	$0.00	
	Framing Plan and Girder Design												0	$0.00	
	Bridge Condition Assessment Report												0	$0.00	
	Bridge Approach Slab Details	1											0	$0.00	
	Weir Upstream of Rio Grande bridge	1											0	$0.00	
	Sheet Pile Weir Upstream of Confluence with E100	1											0	$0.00	
	Retaining Wall Layout for Ground Level Water Storage Tank	1											0	$0.00	
	Update Draft PER write up with Structures info												0	$0.00	
	QC Draft PER with Structures update												0	$0.00	
															$0.00

REGULAR SESSION CITY COUNCIL MEETING PACKET FOR THE MEETING TO BE HELD ON SEPTEMBER 20,

	Plan Production (for Final PER)															
	Review Comment Meeting with JV and HCFCD			4	4									8	$1,580.00	
	Address Draft PER review comments				4		4							8	$1,620.00	
	Develop Final Drainage Report for PER			8		2		8			8			26	$4,540.00	
	Typical Section(s) - Channel	1		1	2		2	4	8		16			33	$4,830.00	
	Typical Section - Trail	1												0	$0.00	
	Plan View Sheets	20												0	$0.00	
	Profile View Sheets	20												0	$0.00	
	Bicycle Trail Overall Layout (BBL) Sheets	4												0	$0.00	
	Bicycle Trail Alignment Table (AT) Sheets	4												0	$0.00	
	Bicycle Trail (BT) Sheets	20												0	$0.00	
	Detention Pond Layout Sheets	2												0	$0.00	
	Tree Removal and Tree Protection Sheets	20												0	$0.00	
	Bridge Layout - Senate Ave and Rio Grande - 2 bridges	2												0	$0.00	
	Quantity Summary - Cost Estimate													0	$0.00	
	Bridge Conditions Assessment Reports													0	$0.00	
	Bridge Layout - EB and WB 290 Frontage Rd (3-span slab beam bridge)	2												0	$0.00	
	Quantity Summary - Cost Estimate													0	$0.00	
	Wall Layout and Design													0	$0.00	
	Bridge Conditions Assessment Reports													0	$0.00	
	Bridge Layout - EB and WB 290 Mainlanes	2												0	$0.00	
	Quantity Summary - Cost Estimate													0	$0.00	
	Wall Layout and Design													0	$0.00	
	Bridge Conditions Assessment Report													0	$0.00	
	Bridge Layout - UPRR Main and Shoofly Bridges	2												0	$0.00	
	Quantity Summary - Cost Estimate													0	$0.00	
	Framing Plan and Girder Design													0	$0.00	
	Bridge Condition Assessment Report													0	$0.00	
	Bridge Approach Slab													0	$0.00	
	Weir Upstream of Rio Grande bridge	1												0	$0.00	
	Sheet Pile Weir Upstream of Confluence with E100	1												0	$0.00	
	Retaining Wall Layout for Ground Level Water Storage Tank	1												0	$0.00	
	TxDOT Bridge Standards	12												0	$0.00	
	Review Final Parcel Acquisition exhibits and documents													0	$0.00	
	Prepare FINAL PER write up													0	$0.00	
	QC Final PER													0	$0.00	
																$12,570.00
	Subtotal Preliminary Engineering / P.E.R.		0	397	10	67	6	484	428	0	168	0	0	1560	**$262,940.00**	
	Prep Work for Community Outreach Meeting															
	Plan, Prepare & Attend Community Outreach Planning Meeting	0	8	8	8									24	$5,160.00	
	Prepare Exhibits / Create PDFs													0	$0.00	
	PowerPoint Presentation	0		4	4									8	$1,580.00	
	Video	0												0	$0.00	
	Attend Community Outreach Meeting	0												0	$0.00	
	Subtotal Community Outreach		8	12	12	0	0	0	0	0	0	0	0		**$6,740.00**	

GULAR SESSION CITY COUNCIL MEETING PACKET FOR THE MEETING TO BE HELD ON SEPTEMBER 20,

Fee Schedule

Subtotal Preliminary Engineering - Project Management Services		
Subtotal Preliminary Engineering / P.E.R.		
Subtotal Community Outreach		
Subtotal Final Design Management		
Subtotal Final Design - Plan Production		
		$0.00
Subtotal Bid Phase		
Subtotal Construction Phase Services, Const Proj Mgmt, and Const Insp.		
Subtotal CE&I Expenses (Trucks, Phones, Computers for 12 months)		
		$0.00
Surveying & ROW Acquisition		
Survey & ROW Acquisition Coordination		$0.00
Grant Admin		
Grant Admin Coordination		
Geotechnical		
Geotechnical Coordination		$0.00
Environmental (incl. Expenses)		
Environmental Coordination		$0.00
SUE		
SUE Coordination		$0.00
H&H	$315,040.00	
H&H Coordination	$25,203.20	$340,243.20
	$340,243.20	

REGULAR SESSION CITY COUNCIL MEETING PACKET FOR THE MEETING TO BE HELD ON SEPTEMBER 20,

Fee Schedule

White Oak Bayou Federal Flood Damage Reduction Project
E127-00-00 Channel Modifications from Jones Road to E100

Surveying

	TASKS		PM / RPLS	Project Surv./RPLS	Survey Tech.	CADD Tech.	2-Person Crew	3-Person Crew	SUBTOTAL HOURS	TOTAL FEE	
		No of Shts	$175.01	$157.01	$100.79	$98.63	$157.01	$193.08			
	PLANS, PROJECT MANUAL, & ESTIMATES		1624.55	20417.1	334	534	480				
	Preliminary Engineering / Preliminary Engineering Report										
	Project Management, Coordination, and Admin										
	Kickoff Meeting		4	4	0	0	0	0	8	$1,328.08	
	Project Management {Assumed 8 months}								0	$0.00	
	Develop and Maintain Project Schedule								0	$0.00	
	Monthly Progress Reports (Assumed 8 Reports)		4	0	0	0	0	0	6	$700.04	
	Meetings with Jersey Village {Assumed 1 per mo for 8 months} and Prepare Mtg Mins								0	$0.00	
	Meetings with HCFCD (Assumed 2) and Prepare Mtg Mins								0	$0.00	
	Meetings with TxDOT (Assumed 2) and Prepare Mtg Mins								0	$0.00	
	Coordination and Meetings with Union Pacific								0	$0.00	
	Coordination and Meetings with Village Center Developer								0	$0.00	
	Joint Agency Meetings with JV, HCFCD and TxDOT (Assumed 1) incl. Mtg Mins								0	$0.00	
	Monthly Invoicing (8 Invoices)								0	$0.00	
	Coordination Meetings with subconsultants (2 per sub)		2	2	0	0	0	0	4	$664.04	
	H&H Design Concept Meeting (Assumed 2)								0	$0.00	
	Coordination with Grant Administration {Assumed for 8 months}								0	$0.00	
	Subtotal Project Management Services								18	**$2,692.16**	
	Preliminary Engineering										
	Data Collection and Field Reconnaissance								0	$0.00	
	Review of As-Builts, Reports, Models								0	$0.00	
	Existing Conditions Meeting with H&H								0	$0.00	
	Proposed Conditions Meeting with H&H								0	$0.00	
	Existing Conditions Meeting with Structures								0	$0.00	
	Proposed Conditions Meeting with Structures								0	$0.00	
	Existing Right-of-way Meeting with Surveyor								0	$0.00	
	Review of Topographic Survey information								0	$0.00	
	Review of Right-of-way information								0	$0.00	
	Review of Digital Terrain Model (DTM)								0	$0.00	
	Review Geotechnical report								0	$0.00	
	Review Environmental report								0	$0.00	
	Coordination with SUE								0	$0.00	
	Review of SUE Utility Table (including monthly updates)								0	$0.00	
	Review of Parcel Acquisition Documents from Surveyor								0	$0.00	
	I. and IV.: Control Surveying - approx. 7 points on site; scope also includes ties to City benchmarks, Floodplain RMs and 2018 LiDAR control		2	12	26	0	64	0	104	$14,903.32	
	Right of Entry - mail letters to approx. 81 landowners, track responses		1	8	24	0	0	0	33	$3,850.05	
	V. Topographic Surveying and Mapping		8	24	48	192	224	0	496	$64,113.44	
	II.: Boundary Surveying								0	$0.00	
	Determine Existing HCFCD ROW - includes deed research, field survey of corridor and adjoining properties' monumentation and analysis, and survey of surface improvement encroachments onto existing HCFCD ROW; Prepare Existing Right-of-Way Alignment Map. All visible encroachments will be shown and dimensioned.		16	64	96	112	112	0	400	$51,156.32	
	After final alignment and location of additional ROW is provided by client, perform additional Boundary Surveying and Mapping to create a Proposed HCFCD ROW Alignment Map. Parcel Maps and Metes and Bounds Descriptions will also be proviced. Assume 20 Parcels.		30	80	140	230	80	0	560	$67,167.40	
											$201,190.53

REGULAR SESSION CITY COUNCIL MEETING PACKET FOR THE MEETING TO BE HELD ON SEPTEMBER 20, 2021

											$0.00
	Subtotal Preliminary Engineering / P.E.R.								1593	**$201,190.53**	
	Prep Work for Community Outreach Meeting										
	Plan, Prepare & Attend Community Outreach Planning Meeting	0							0	$0.00	
	Prepare Exhibits / Create PDFs								0	$0.00	
	PowerPoint Presentation	0							0	$0.00	
	Video	0							0	$0.00	
	Attend Community Outreach Meeting	0							0	$0.00	
	Subtotal Community Outreach									**$0.00**	
	Right of Enry Letters		Ea.								
	81 Letters x	2 x	$7.55	$611.55							
			Subtotal =	$611.55							
	Abstractor Certificates: (Abstract Services of Houston)										
	Assume 10 parcels < 1 acre	2 x	$350	$3,500.00							
	Assume 5 parcels 1-4 acres	1 x	$500	$2,500.00							
	Assume 5 parcels >4 acres	1 x	$700	$3,500.00							
			Subtotal =	$9,500.00							
	LANDTECH TOTAL - ALL TASKS									**$213,994.24**	

Surveying & ROW Acquisition	$213,994.24	
Survey & ROW Acquisition Coordination	$17,119.54	$231,113.78
Grant Admin		
Grant Admin Coordination		
Geotechnical		
Geotechnical Coordination		
Environmental (incl. Expenses)		
Environmental Coordination		
SUE		
SUE Coordination		
H&H		
H&H Coordination		
	$231,113.78	

REGULAR SESSION CITY COUNCIL MEETING PACKET FOR THE MEETING TO BE HELD ON SEPTEMBER 20, 2021

Fee Schedule

White Oak Bayou Federal Flood Damage Reduction Project
E127-00-00 Channel Modifications from Jones Road to E100

	TASKS		Principal	Sr. Project Manager	Project Manager	Quality Manager	Senior Engineer	Design Engineer	Engineer-in-Training	Engineer Tech	Senior CADD Operator	CADD Operator	Two Man Designating Crew	Vacuum Excav Truck with Two Technicians	Truck Mounted Attenuator	Admin / Clerical	TOTAL HOURS	SUE TOTAL COST
		No of Shts	$0.00	$242.00	$175.00	$129.00	$0.00	$0.00	$129.00	$0.00	$129.00	$84.00	$175.00	$304.00	$450.00	$0.00		
	PLANS, PROJECT MANUAL, & ESTIMATES																	
	Preliminary Engineering / Preliminary Engineering Report																	
1	Project Management, Coordination, and Admin																	
1.1	Kickoff Meeting																	
1.2	Site reconnaissance																	
1.3	Develop and Maintain Project Schedule																	
1.4	Monthly Progress Reports																	
1.5.1	Meetings with Jersey Village																	
1.5.2	Meetings with HCFCD																	
1.5.3	Meetings with TxDOT																	
1.5.4	Meetings with Union Pacific																	
1.5.5	Meetings with Village Center Developer																	
	Invoices																	
	Coordination Meetings with subconsultants																	
	H&H Design Concept Meeting																	
	Structures Design Concept Meeting																	
	Coordination with Grant Administration																	
	SUBTOTAL																	
	Preliminary Engineering																	
	Data Collection and Field Reconnaissance																	
	Review of As-Builts, Reports, Models																	
	Existing Conditions Meeting with H&H																	
	Proposed Conditions Meeting with H&H																	
	Existing Conditions Meeting with Structures																	
	Existing Right-of-way Meeting with Surveyor																	
	Review of Topographic Survey information																	
	Review of Right-of-way information																	
	Review Geotechnical report																	
	Review Environmental report																	
	Coordination with SUE, Additional utility owner research, online GIS search								4								4	$516.00
	Existing Utility Base Map in CAD file (no cut shts), SUE QL C & D, coordination with survey task lead			1		4			3		34						42	$5,531.00
	Generate and Review SUE Utility Conflict Table (preliminary findings only)	1		2					12								14	$2,032.00
	Generate Utility Contact List	1							4								4	$516.00
																		$8,595.00
	SUBTOTAL																	
	Prep Work for Community Outreach Meeting																	
	Attend Community Outreach Planning Meeting	0																
	Prepare Exhibits / Create PDFs																	
	PowerPoint Presentation	0																
	Video?	0																
	Attend Community Outreach Meeting	0																
	SUBTOTAL																	

Final Design

Project Management, Coordination, and Admin
Kickoff Meeting / Project Status update
Develop and Maintain Project Schedule
Monthly Progress Reports
Meetings with Jersey Village
Meetings with HCFCD
Meetings with TxDOT
Meetings with Union Pacific
Meetings with Village Center Developer

Invoices
Coordination Meetings with subconsultants
Coordination with Grant Administration

SUBTOTAL

Subtotal Preliminary Engineering - Project Management Serv	#REF!
Subtotal Preliminary Engineering / P.E.R.	$0.00
Subtotal Community Outreach	$0.00
Subtotal Final Design Management	$0.00
Subtotal Final Design - Plan Production	$0.00
Subtotal Bid Phase	$0.00
Subtotal Construction Phase Services, Const Proj Mgmt, and	$0.00
Subtotal CE&I Expenses (Trucks, Phones, Computers for 12	$0.00

Surveying & ROW Acquisition	
Survey & ROW Acquisition Coordination	
Grant Admin	
Grant Admin Coordination	
Geotechnical	
Geotechnical Coordination	
Environmental (incl. Expenses)	
Environmental Coordination	
SUE	$8,595.00
SUE Coordination	$859.50
H&H	
H&H Coordination	
	$9,454.50
	$9,454.50

REGULAR SESSION CITY COUNCIL MEETING PACKET FOR THE MEETING TO BE HELD ON SEPTEMBER 20,

FEMA Required Contract Clauses

EQUAL EMPLOYMENTOPPORTUNITY

During the performance of this contract, the contractor agrees as follows:

(1) The contractor will not discriminate against any employee or applicant for employment because of race, color, religion, sex, sexual orientation, gender identity, or national origin. The contractor will take affirmative action to ensure that applicants are employed, and that employees are treated during employment without regard to their race, color, religion, sex, sexual orientation, gender identity, or national origin. Such action shall include, but not be limited to the following:

Employment, upgrading, demotion, or transfer; recruitment or recruitment advertising; layoff or termination; rates of pay or other forms of compensation; and selection for training, including apprenticeship. The contractor agrees to post in conspicuous places, available to employees and applicants for employment, notices to be provided setting forth the provisions of this nondiscrimination clause.

(2) The contractor will, in all solicitations or advertisements for employees placed by or on behalf of the contractor, state that all qualified applicants will receive consideration for employment without regard to race, color, religion, sex, sexual orientation, gender identity, or national origin.

(3) The contractor will not discharge or in any other manner discriminate against any employee or applicant for employment because such employee or applicant has inquired about, discussed, or disclosed the compensation of the employee or applicant or another employee or applicant. This provision shall not apply to instances in which an employee who has access to the compensation information of other employees or applicants as a part of such employee's essential job functions discloses the compensation of such other employees or applicants to individuals who do not otherwise have access to such information, unless such disclosure is in response to a formal complaint or charge, in furtherance of an investigation, proceeding, hearing, or action, including an investigation conducted by the employer, or is consistent with the contractor's legal duty to furnish information.

(4) The contractor will send to each labor union or representative of workers with which he has a collective bargaining agreement or other contract or understanding, a notice to be provided advising the said labor union or workers' representatives of the contractor's commitments under this section, and shall post copies of the notice in conspicuous places available to employees and applicants for employment.

(5) The contractor will comply with all provisions of Executive Order 11246 of September 24, 1965, and of the rules, regulations, and relevant orders of the Secretary of Labor.

(6) The contractor will furnish all information and reports required by Executive Order 11246 of September 24, 1965, and by rules, regulations, and orders of the Secretary of Labor, or pursuant thereto, and will permit access to his books, records, and accounts by the administering agency and the Secretary of Labor for purposes of investigation to ascertain compliance with such rules, regulations, and orders.

(7) In the event of the contractor's noncompliance with the nondiscrimination clauses of this contract or with any of the said rules, regulations, or orders, this contract may be canceled, terminated, or suspended in whole or in part and the contractor may be declared ineligible for further Government contracts or federally assisted construction contracts in accordance with

REGULAR SESSION CITY COUNCIL MEETING PACKET FOR THE MEETING TO BE HELD ON SEPTEMBER 20, 2021

procedures authorized in Executive Order 11246 of September 24, 1965, and such other sanctions may be imposed and remedies invoked as provided in Executive Order 11246 of September 24, 1965, or by rule, regulation, or order of the Secretary of Labor, or as otherwise provided by law.

(8) The contractor will include the portion of the sentence immediately preceding paragraph (1) and the provisions of paragraphs (1) through (8) in every subcontract or purchase order unless exempted by rules, regulations, or orders of the Secretary of Labor issued pursuant to section 204 of Executive Order 11246 of September 24, 1965, so that such provisions will be binding upon each subcontractor or vendor. The contractor will take such action with respect to any subcontract or purchase order as the administering agency may direct as a means of enforcing such provisions, including sanctions for noncompliance:

Provided, however, that in the event a contractor becomes involved in, or is threatened with, litigation with a subcontractor or vendor as a result of such direction by the administering agency, the contractor may request the United States to enter into such litigation to protect the interests of the United States.

The applicant further agrees that it will be bound by the above equal opportunity clause with respect to its own employment practices when it participates in federally assisted construction work: Provided, That if the applicant so participating is a State or local government, the above equal opportunity clause is not applicable to any agency, instrumentality or subdivision of such government which does not participate in work on or under the contract.

The applicant agrees that it will assist and cooperate actively with the administering agency and the Secretary of Labor in obtaining the compliance of contractors and subcontractors with the equal opportunity clause and the rules, regulations, and relevant orders of the Secretary of Labor, that it will furnish the administering agency and the Secretary of Labor such information as they may require for the supervision of such compliance, and that it will otherwise assist the administering agency in the discharge of the agency's primary responsibility for securing compliance.

The applicant further agrees that it will refrain from entering into any contract or contract modification subject to Executive Order 11246 of September 24, 1965, with a contractor debarred from, or who has not demonstrated eligibility for, Government contracts and federally assisted construction contracts pursuant to the Executive Order and will carry out such sanctions and penalties for violation of the equal opportunity clause as may be imposed upon contractors and subcontractors by the administering agency or the Secretary of Labor pursuant to Part II, Subpart D of the Executive Order. In addition, the applicant agrees that if it fails or refuses to comply with these undertakings, the administering agency may take any or all of the following actions: Cancel, terminate, or suspend in whole or in part this grant (contract, loan, insurance, guarantee); refrain from extending any further assistance to the applicant under the program with respect to which the failure or refund occurred until satisfactory assurance of future compliance has been received from such applicant; and refer the case to the Department of Justice for appropriate legal proceedings.

REGULAR SESSION CITY COUNCIL MEETING PACKET FOR THE MEETING TO BE HELD ON SEPTEMBER 20, 2021

Compliance with the Davis-Bacon Act.

(1) All transactions regarding this contract shall be done in compliance with the Davis-Bacon Act (40 U.S.C. 3141- 3144, and 3146-3148) and the requirements of 29C.F.R. pt. 5 as may be applicable. The contractor shall comply with 40 U.S.C. 3141-3144, and 3146-3148 and the requirements of 29 C.F.R. pt. 5 as applicable.
(2) Contractors are required to pay wages to laborers and mechanics at a rate not less than the prevailing wages specified in a wage determination made by the Secretary of Labor.
(3) Additionally, contractors are required to pay wages not less than once a week.

Compliance with the Copeland "Anti-Kickback" Act.

(1) **Contractor**. The contractor shall comply with 18 U.S.C. § 874, 40 U.S.C. § 3145, and the requirements of 29 C.F.R. pt. 3 as may be applicable, which are incorporated by reference into this contract.
(2) **Subcontracts**. The contractor or subcontractor shall insert in any subcontracts the clause above and such other clauses as FEMA may by appropriate instructions require, and also a clause requiring the subcontractors to include these clauses in any lower tier subcontracts. The prime contractor shall be responsible for the compliance by any subcontractor or lower tier subcontractor with all of these contract clauses.
(3) Breach. A breach of the contract clauses above may be grounds for termination of the contract, and for debarment as a contractor and subcontractor as provided in 29 C.F.R. § 5.12."

Compliance with the Contract Work Hours and Safety Standards Act.

(1) **Overtime requirements**. No contractor or subcontractor contracting for any part of the contract work which may require or involve the employment of laborers or mechanics shall require or permit any such laborer or mechanic in any workweek in which he or she is employed on such work to work in excess of forty hours in such workweek unless such laborer or mechanic receives compensation at a rate not less than one and one-half times the basic rate of pay for all hours worked in excess of forty hours in such workweek.
(2) Violation; liability for unpaid wages; liquidated damages. In the event of any violation of the clause set forth in paragraph (b)(1) of this section the contractor and any subcontractor responsible therefor shall be liable for the unpaid wages. In addition, such contractor and subcontractor shall be liable to the United States, for liquidated damages. Such liquidated damages shall be computed with respect to each individual laborer or mechanic, including watchmen and guards, employed in violation of the clause set forth in paragraph (b)(1) of this section, in the sum of $27 for each calendar day on which such individual was required or permitted to work in excess of the standard workweek of forty hours without payment of the overtime wages required by the clause set forth in paragraph (b)(1) of this section.
(3) Withholding for unpaid wages and liquidated damages. The City of Jersey Village shall upon its own action or upon written request of an authorized representative of the Department of Labor withhold or cause to be withheld, from any moneys payable on account of work performed by

REGULAR SESSION CITY COUNCIL MEETING PACKET FOR THE MEETING TO BE HELD ON SEPTEMBER 20, 2021

the contractor or subcontractor under any such contract or any other Federal contract with the same prime contractor, or any other federally-assisted contract subject to the Contract Work Hours and Safety Standards Act, which is held by the same prime contractor, such sums as may be determined to be necessary to satisfy any liabilities of such contractor or subcontractor for unpaid wages and liquidated damages as provided in the clause set forth in paragraph (b)(2) of this section. (4) Subcontracts. The contractor or subcontractor shall insert in any subcontracts the clauses set forth in paragraph (b)(1) through (4) of this section and also a clause requiring the subcontractors to include these clauses in any lower tier subcontracts. The prime contractor shall be responsible for compliance by any subcontractor or lower tier subcontractor with the clauses set forth in paragraphs (b)(1) through (4) of this section

Clean Air Act

(1) The contractor agrees to comply with all applicable standards, orders or regulations issued pursuant to the Clean Air Act, as amended, 42 U.S.C. § 7401 et seq.
(2) The contractor agrees to report each violation to the City and understands and agrees that the City will, in turn, report each violation as required to assure notification to the Federal Emergency Management Agency, and the appropriate Environmental Protection Agency Regional Office.
(3) The contractor agrees to include these requirements in each subcontract exceeding $150,000 financed in whole or in part with Federal assistance provided by FEMA.

Federal Water Pollution Control Act

(1) The contractor agrees to comply with all applicable standards, orders, or regulations issued pursuant to the Federal Water Pollution Control Act, as amended, 33 U.S.C. 1251 et seq.
(2) The contractor agrees to report each violation to the (name of the applicant entering into the contract) and understands and agrees that the (name of the applicant entering into the contract) will, in turn, report each violation as required to assure notification to the Federal Emergency Management Agency, and the appropriate Environmental Protection Agency Regional Office.
(3) The contractor agrees to include these requirements in each subcontract exceeding $150,000 financed in whole or in part with Federal assistance provided by FEMA.

Suspension and Debarment

(1) This contract is a covered transaction for purposes of 2 C.F.R. pt. 180 and 2 C.F.R. pt. 3000. As such, the contractor is required to verify that none of the contractor's principals (defined at 2 C.F.R. § 180.995) or its affiliates (defined at 2 C.F.R. § 180.905) are excluded (defined at 2 C.F.R. § 180.940) or disqualified (defined at 2 C.F.R. § 180.935).
(2) The contractor must comply with 2 C.F.R. pt. 180, subpart C and2 C.F.R. pt. 3000, subpart C, and must include a requirement to comply with these regulations in any lower tier covered transaction it enters into.
(3) This certification is a material representation of fact relied upon by the City. If it is later determined that the contractor did not comply with 2 C.F.R. pt. 180, subpart C and 2 C.F.R. pt.

REGULAR SESSION CITY COUNCIL MEETING PACKET FOR THE MEETING TO BE HELD ON SEPTEMBER 20, 2021

3000, subpart C, in addition to remedies available to the City, the Federal Government may pursue available remedies, including but not limited to suspension and/or debarment.

(4) The bidder or proposer agrees to comply with the requirements of2 C.F.R. pt. 180, subpart C and 2 C.F.R. pt. 3000, subpart C while this offer is valid and throughout the period of any contract that may arise from this offer. The bidder or proposer further agrees to include a provision requiring such compliance in its lower tier covered transactions.

Byrd Anti-Lobbying Amendment, 31 U.S.C. § 1352 (as amended)

Contractors who apply or bid for an award of $100,000 or more shall file the required certification. Each tier certifies to the tier above that it will not and has not used Federal appropriated funds to pay any person or organization for influencing or attempting to influence an officer or employee of any agency, a Member of Congress, officer or employee of Congress, or an employee of a Member of Congress in connection with obtaining any Federal contract, grant, or any other award covered by 31 U.S.C. § 1352. Each tier shall also disclose any lobbying with non-Federal funds that takes place in connection with obtaining any Federal award. Such disclosures are forwarded from tier to tier up to the recipient who in turn will forward the certification(s) to the awarding agency.

Procurement of Recovered Materials

(1) In the performance of this contract, the Contractor shall make maximum use of products containing recovered materials that are EPA-designated items unless the product cannot be acquired
   - **a.** Competitively within a timeframe providing for compliance with the contract performance schedule;
   - **b.** Meeting contract performance requirements; or
   - **c.** At a reasonable price.

(2) Information about this requirement, along with the list of EPAdesignated items, is available at EPA's Comprehensive Procurement Guidelines web site, https://www.epa.gov/smm/comprehensiveprocurement-guideline-cpg-program.

(3) The Contractor also agrees to comply with all other applicable requirements of Section 6002 of the Solid Waste Disposal Act.

Access to Records

The following access to records requirements apply to this contract:

(1) The Contractor agrees to provide the Texas Division of Emergency Management, the City, the FEMA Administrator, the Comptroller General of the United States, or any of their authorized representatives access to any books, documents, papers, and records of the Contractor which are directly pertinent to this contract for the purposes of making audits, examinations, excerpts, and transcriptions.

(2) The Contractor agrees to permit any of the foregoing parties to reproduce by any means whatsoever or to copy excerpts and transcriptions as reasonably needed.

(3) The Contractor agrees to provide the FEMA Administrator or his authorized representatives access to construction or other work sites pertaining to the work being completed under the contract.

REGULAR SESSION CITY COUNCIL MEETING PACKET FOR THE MEETING TO BE HELD ON SEPTEMBER 20, 2021

(4) In compliance with the Disaster Recovery Act of 2018, the TDEM and the Contractor acknowledge and agree that no language in this contract is intended to prohibit audits or internal reviews by the FEMA Administrator or the Comptroller General of the United States.

DHS Seal, Logo, and Flags

The contractor shall not use the DHS seal(s), logos, crests, or reproductions of flags or likenesses of DHS agency officials without specific FEMA pre-approval.

COMPLIANCE WITH FEDERAL LAW, REGULATIONS, AND EXECUTIVEORDERS

This is an acknowledgement that FEMA financial assistance will be used to fund all or a portion of the contract. The contractor will comply with all applicable Federal law, regulations, executive orders, FEMA policies, procedures, and directives.

NO OBLIGATION BY FEDERAL GOVERNMENT

The Federal Government is not a party to this contract and is not subject to any obligations or liabilities to the non-Federal entity, contractor, or any other party pertaining to any matter resulting from the contract.

PROGRAM FRAUD AND FALSE OR FRAUDULENT STATEMENTS OR RELATEDACTS

The Contractor acknowledges that 31 U.S.C. Chap. 38 (Administrative Remedies for False Claims and Statements) applies to the Contractor's actions pertaining to this contract.

REGULAR SESSION CITY COUNCIL MEETING PACKET FOR THE MEETING TO BE HELD ON SEPTEMBER 20, 2021

TWDB Standard Required Clauses

For the following Four TWDB required clauses, "Contract" refers to the Agreement between the City and Aguirre & Fields, "Subcontractor" Refers to Aguirre & Fields, and "Contractor" refers to City of Jersey Village

State Auditor Clause

By executing this Contract, the SUBCONTRACTOR accepts the authority of the State Auditor's Office, under direction of the legislative audit committee, to conduct audits and investigations in connection with any and all state funds received pursuant to this contract. The SUBCONTRACTOR shall comply with and cooperate in any such investigation or audit. The SUBCONTRACTOR agrees to provide the State Auditor with access to any information the State Auditor considers relevant to the investigation or audit. The SUBCONTRACTOR also agrees to include a provision in any subcontract related to this contract that requires the SUBCONTRACTOR to submit to audits and investigation by the State Auditor's Office in connection with any and all state funds received pursuant to the subcontract.

Financial Records Clause

The SUBCONTRACTOR (S) and its contracted parties shall maintain satisfactory financial accounting documents and records, including copies of invoices and receipts, and shall make them available for examination and audit by the EXECUTIVE ADMINISTRATOR of the TWDB. Accounting by the SUBCONTRACTOR (S) and its contracted parties shall be in a manner consistent with generally accepted accounting principles,

Ownership Clause

The TWDB shall have unlimited rights to technical or other data resulting directly from the performance of services under this CONTRACT. It is agreed that all reports, drafts of reports, or other material, data, drawings, computer programs and codes associated with this CONTRACT and developed by the SUBCONTRACTOR (S) or its contracted parties pursuant to this CONTRACT shall become the joint property of the SUBCONTRACTOR (S) and the TWDB. These materials shall not be copyrighted or patented by the SUBCONTRACTOR (S) or by any consultants involved in this CONTRACT unless the EXECUTIVE ADMINISTRATOR of the TWDB approves in writing the right to establish copyright or patent; provided, however, that copyrighting or patenting by the SUBCONTRACTOR (S) or its SUB-SUBCONTRACTORs will in no way limit the TWDB 's access to or right to request and receive or distribute data and information obtained or developed pursuant to this CONTRACT. Any material subject to a TWDB copyright and produced by the SUBCONTRACTOR (S) or TWDB pursuant to this CONTRACT may be printed by the SUBCONTRACTOR (S) or the TWDB at their own cost and distributed by either at their discretion. The SUBCONTRACTOR (S) may otherwise utilize such material provided under this CONTRACT as it deems necessary and appropriate, including the right to publish and distribute the materials or any parts thereof under its own name, provided that any TWDB copyright is appropriately noted on the printed materials.

No Debt Against The State Clause

For the purpose of this CONTRACT, the SUBCONTRACTOR (S) will be considered an independent SUBCONTRACTOR and therefore solely responsible for liability resulting from negligent acts or

REGULAR SESSION CITY COUNCIL MEETING PACKET FOR THE MEETING TO BE HELD ON SEPTEMBER 20, 2021

omissions. The SUBCONTRACTOR (S) shall obtain all necessary insurance, in the judgment of the SUBCONTRACTOR (S), to protect themselves, the CONTRACTOR, the TWDB, and employees and officials of the TWDB from liability arising out of this CONTRACT. The SUBCONTRACTOR (S) shall indemnify and hold the TWDB and the State of Texas harmless, to the extent the SUBCONTRACTOR (S) may do so in accordance with state law, from any and all losses, damages, liability, or claims therefore, on account of personal injury, death, or property damage of any nature whatsoever caused by the SUBCONTRACTOR (S), arising out of the activities under this CONTRACT. The SUBCONTRACTOR (S) shall be solely and entirely responsible for procuring all appropriate licenses and permits, which may be required by any competent authority for the SUBCONTRACTOR (S) to perform the subject work.

Licenses, Permit and Insurance Clause

For the purpose of this CONTRACT, the SUBCONTRACTOR (S) will be considered an independent SUBCONTRACTOR and therefore solely responsible for liability resulting from negligent acts or omissions. The SUBCONTRACTOR (S) shall obtain all necessary insurance, in the judgment of the SUBCONTRACTOR (S), to protect themselves, the CONTRACTOR, the TWDB, and employees and officials of the TWDB from liability arising out of this CONTRACT. The SUBCONTRACTOR (S) shall indemnify and hold the TWDB and the State of Texas harmless, to the extent the SUBCONTRACTOR (S) may do so in accordance with state law, from any and all losses, damages, liability, or claims therefore, on account of personal injury, death, or property damage of any nature whatsoever caused by the SUBCONTRACTOR (S), arising out of the activities under this CONTRACT.

The SUBCONTRACTOR (S) shall be solely and entirely responsible for procuring all appropriate licenses and permits, which may be required by any competent authority for the SUBCONTRACTOR (S) to perform the subject work.

REGULAR SESSION CITY COUNCIL MEETING PACKET FOR THE MEETING TO BE HELD ON SEPTEMBER 20, 2021

CITY COUNCIL
CITY OF JERSEY VILLAGE, TEXAS
AGENDA REQUEST DISCUSSION FORM

AGENDA DATE: September 20, 2021

AGENDA ITEM: H1

AGENDA SUBJECT: Consider Resolution No. 2021-62, appointing members to the Planning and Zoning Commission (P&Z) and the Capital Improvements Advisory Committee (CIAC), the Board of Adjustment (BOA), the Building Board of Adjustment and Appeals (BBOAA), the Parks and Recreation Advisory Committee (PRAC), and the Golf Course Advisory Committee (GCAC).

Department/Prepared By: Lorri Coody **Date Submitted:** August 17, 2021

EXHIBITS: Resolution No. 2021-62
Exhibit A - List of Members for Appointment

CURRENT MEMBER APPLICATIONS	–	**NEW APPLICATIONS**
P&Z and CIAC	–	P&Z and CIAC
BOA	–	BOA - None
BBOAA	–	BBOAA - None
PRAC	–	PRAC
GCAC	–	GCAC

CURRENT MEMBERSHIP ATTENDANCE ROSTERS
P&Z and CIAC
BOA
BBOAA
PRAC
GCAC

BACKGROUND INFORMATION:

Several member appointments on various Boards, Commissions, and Committees have expired and need reappointing.

RECOMMENDED ACTION:

Appoint members for the terms outlined on the List of Members attached to the proposed resolution.

REGULAR SESSION CITY COUNCIL MEETING PACKET FOR THE MEETING TO BE HELD ON SEPTEMBER 20, 2021

RESOLUTION NO. 2021-62

A RESOLUTION OF THE CITY COUNCIL OF THE CITY OF JERSEY VILLAGE, TEXAS, APPOINTING MEMBERS TO THE PLANNING & ZONING COMMISSION AND CAPITAL IMPROVEMENTS ADVISORY COMMITTEE, BOARD OF ADJUSTMENT, BUILDING BOARD OF ADJUSTMENT AND APPEALS, GOLF COURSE ADVISORY COMMITTEE; AND THE PARKS AND RECREATION ADVISORY COMMITTEE.

WHEREAS, the City Council of the City of Jersey Village regularly appoints members to volunteer boards, committees, and commissions; and

WHEREAS, various members are appointed for one-year and two-year terms; and

BE IT RESOLVED BY THE CITY COUNCIL OF THE CITY OF JERSEY VILLAGE, TEXAS THAT:

The following persons are appointed for one-year and two-year terms to various boards, commissions, and committees, as more fully described in the attached "Exhibit A."

PASSED AND APPROVED this the **20th** day of **September, 2021.**

_____
Bobby Warren, Mayor

ATTEST:

_____
Lorri Coody, City Secretary

CITY OF JERSEY VILLAGE TEXAS A TEXAS STAR COMMUNITY

REGULAR SESSION CITY COUNCIL MEETING PACKET FOR THE MEETING TO BE HELD ON SEPTEMBER 20, 2021

Exhibit A – List of Appointed Members for Terms Beginning October 1, 2021

The Planning and Zoning Commission and Capital Improvements Advisory Committee

Planning and Zoning Commissioners also serve on the Capital Improvements Advisory Committee. Accordingly, appointments made for Planning and Zoning Commission will also serve on the Capital Improvements Advisory Committee.

Currently, there are no vacant positions on the Planning and Zoning Commission; but the term of office for Positions 1, 2, 3, and 4 expire on September 30, 2021. The new term for these positions begins on October 1, 2021 and will end on September 30, 2023.

The following are new applications on file with the City Secretary from resident(s) interested in serving on this Commission.

Charles A. Butler, III Eric Henao Cody Matthews

The following members currently serving on this Commission desire re-appointment:

	POSITION	FIRST APPOINTED	CURRENT TERM ENDS
COURTNEY STANDLEE - YES	1	05/18	09/30/21
JENNIFER MCCREA - YES	2	01/19	09/30/21
BARBARA FREEMAN - NO REAPPOINTMENT	3	02/10	09/30/21
JOSEPH J. PAUL – NO REAPPOINTMENT	4	12/15	09/30/21

Current Board Members Barbara Freeman and Joseph J. Paul do not desire reappointment, making Place 3 and Place 4 vacant after September 30, 2021.

In consideration of any new applicants desiring appointment to this Commission and the desire of those seeking reappointment, Council approves the following appointments to the Planning and Zoning Commission and the Capital Improvements Advisory Committee for the term to begin October 1, 2021 and end September 30, 2023:

	POSITION	TERM BEGINS	TERM ENDS
	1	10/01/21	09/30/23
	2	10/01/21	09/30/23
	3	10/01/21	09/30/23
	4	10/01/21	09/30/23

The Board of Adjustment

Currently, there are no vacant positions on the Board of Adjustment, but the term of office for Positions 1, 2, 3, 4, and A1 will expire on September 30, 2021. The new term for these positions begins on October 1, 2021 and will end on September 30, 2023.

There are no new applications on file with the City Secretary from resident(s) interested in serving on this Board.

The following members currently serving on the Board desire re-appointment:

REGULAR SESSION CITY COUNCIL MEETING PACKET FOR THE MEETING TO BE HELD ON SEPTEMBER 20, 2021

	POSITION	FIRST APPOINTED	CURRENT TERM ENDS
NESTOR MENA - YES	1	04/19	09/30/21
JOE PENNINGTON - YES	2	09/15	09/30/21
THOMAS SIMCHAK - YES	3	04/09	09/30/21
JUDY TIDWELL - YES	A1	09/19	09/30/21

In consideration of any new applicants desiring appointment to this Board and the desire of those seeking reappointment, Council approves the following appointments to this Board for the term to begin October 1, 2021 and end September 30, 2023:

	POSITION	TERM BEGINS	TERM ENDS
	1	10/01/21	09/30/23
	2	10/01/21	09/30/23
	3	10/01/21	09/30/23
	A1	10/01/21	09/30/23

Building Board of Adjustment and Appeals

Currently, there are no vacant positions on the Building Board of Adjustment and Appeals. but the term of office for Positions 5, 6, and 7 will expire on September 30, 2021. The new term for these positions begins on October 1, 2021 and will end on September 30, 2023.

There are no new applications on file with the City Secretary from resident(s) interested in serving on this Board.

The following members currently serving on the Board desire re-appointment:

	POSITION	FIRST APPOINTED	CURRENT TERM ENDS
ARI FLEITMAN - YES	5	10/08	09/30/21
MICHAEL O'KELLEY - YES	6	3/96	09/30/21
GARY VOSSLER - YES	7	3/96	09/30/21

In consideration of any new applicants desiring appointment to this Board and the desire of those seeking re-appointment, Council approves the following appointments to this Board for the positions and terms listed:

	POSITION	TERM BEGINS	TERM ENDS
	5	10/01/21	09/30/23
	6	10/01/21	09/30/23
	7	10/01/21	09/30/23

Parks and Recreation Advisory Committee

Currently, there are no vacant positions on the Recreation and Events Committee, but the term of

office for Positions 1, 2, 3, and 4 will expire on September 30, 2021. The new term for these positions begins on October 1, 2021 and will end on September 30, 2023.

Following are the new applications on file with the City Secretary from residents interested in serving on this Committee. Lynda Schubring Glenn Jackoviak Heather Tuggle Jamie MacDonald Kristy Holder

The following members, currently serving on this Committee desire re-appointment:

	POSITION	FIRST APPOINTED	CURRENT TERM ENDS
BRIDGET MARTINEZ - YES	1	09/15	09/30/21
NORA R. HAHN – NO REAPPOINTMENT	2	06/19	09/30/21
DAVID LOCK - YES	3	09/15	09/30/21
CHARLES MATTAIR - YES	4	09/19	09/30/21

Current Board Member Nora R. Hahn does not desire reappointment, making Place 2 vacant after September 30, 2021.

In consideration of any new applicants desiring appointment to this Committee and the desire of those seeking re-appointment, Council approves the following appointments and place assignments for this Committee for terms outlined below:

	POSITION	TERM BEGINS	TERM ENDS
	1	10/01/21	09/30/23
	2	10/01/21	09/30/23
	3	10/01/21	09/30/23
	4	10/01/21	09/30/23

Golf Course Advisory Committee

Currently, there are no vacant positions on the Golf Course Advisory Committee, but the term of office for Positions 1 through 4 will expire on September 30, 2021. The new term for these positions begins on October 1, 2021 and will end on September 30, 2023.

There is one application on file with the City Secretary from residents interested in serving on this Committee. Eddie Martinez

In consideration of any new applicants desiring appointment to this Committee and the desire of those seeking re-appointment, Council approves the following appointments and place assignments for this Committee for terms outlined below:

	POSITION	FIRST APPOINTED	CURRENT TERM ENDS
VANCE BURNHAM – NO REAPPOINTMENT	1	11/04	09/30/21
GREG FAIR - YES	2	05/09	09/30/21
JANE ARNETT - YES	3	04/12	09/30/21
DAVID L. LOCK - YES	4	09/16	09/30/21

Current Board Member Vance Burnham does not desire reappointment, making Place 1 vacant after September 30, 2021.

In consideration of any new applicants desiring appointment to this Committee and the desire of those seeking re-appointment, Council approves the following appointments to this Committee:

	POSITION	TERM BEGINS	TERM ENDS
	1	10/01/21	09/30/23
	2	10/01/21	09/30/23
	3	10/01/21	09/30/23
	4	10/01/21	09/30/23

CITY COUNCIL
CITY OF JERSEY VILLAGE, TEXAS
AGENDA REQUEST

AGENDA DATE: September 20, 2021

AGENDA ITEM: H2

AGENDA SUBJECT: Consider Resolution No. 2021-63, selecting an individual to serve on the TML Health Benefits Pool Board of Trustees – Region 14.

Department/Prepared By: Lorri Coody **Date Submitted:** August 20, 2021

EXHIBITS: Resolution No. 2021-63
Exhibit A – Official Ballot
Email from Jason Reynolds
Email from Mike Barrow
Email from Paula Favors

BACKGROUND INFORMATION:

The Texas Municipal League Health Benefits Pool Board of Trustees Term of Office for Region 14 will expire. The term of office for this position is three years. A slate of interested candidates appears on the official ballot for election. Along with each name is a brief summary of qualifications for each candidate. The ballot must be received by the Board Secretary no later than September 27, 2021 and the official ballot must be properly signed and all pages of the ballot must be submitted in accordance with the instructions in order for the City of Jersey Village's vote to be counted.

The qualified person must be either an elected official or an employee of an incorporated city within the region. A qualified municipal employee must hold a position of Department Head or higher; work at least 20 hours per week for an Employer Member; be paid by Employer Member with public funds; and be hired and fired only by another incorporated city official or by the incorporated city's governing body. It is intended that one-half (½) of the regionally elected trustees will be elected city officials and one-half (½) of the regionally elected trustees will be appointed city officials. The Pool offers various insurance and risk coverage including Workers' Compensation, Liability Insurance, Property Insurance and Special Risk Coverage.

The incumbent is Jason Reynolds, the City Manager from Nassau Bay. He is also the individual that City Council nominated for this position in Resolution 2021-51 on July 19, 2021.

The Candidates

Jason Reynolds, Mike Barrow, and Paula Favors

A brief summary of qualifications for each candidate is listed on the official ballot.

RECOMMENDED ACTION:

MOTION: To approve Resolution No. 2021-63, selecting an individual to serve on the TML Health Benefits Pool Board of Trustees – Region 14.
.

REGULAR SESSION CITY COUNCIL MEETING PACKET FOR THE MEETING TO BE HELD ON SEPTEMBER 20, 2021

RESOLUTION NO. 2021-63

A RESOLUTION OF THE CITY COUNCIL OF THE CITY OF JERSEY VILLAGE, TEXAS, SELECTING AN INDIVIDUAL TO SERVE ON THE TML HEALTH BENEFITS POOL BOARD OF TRUSTEES – REGION 14.

WHEREAS, the city council of the City of Jersey Village is eligible to elect an individual by ballot to serve on the TML Health Benefits Pool Board of Trustees for Region 14; and

WHEREAS, the term of office for which this individual is being elected is three years; **NOW THEREFORE**,

BE IT RESOLVED BY THE CITY COUNCIL OF THE CITY OF JERSEY VILLAGE, TEXAS THAT:

The City Council of the City of Jersey Village selects the individual indicated on the official ballot attached hereto as "Exhibit A" to serve on the TML Health Benefits Pool Board of Trustees for Region 14.

PASSED AND APPROVED this the **20th** day of **September, 2021.**

_____
Bobby Warren, Mayor

ATTEST:

CITY OF JERSEY VILLAGE TEXAS A TEXAS STAR COMMUNITY

_____
Lorri Coody, City Secretary

REGULAR SESSION CITY COUNCIL MEETING PACKET FOR THE MEETING TO BE HELD ON SEPTEMBER 20, 2021

MEMORANDUM

TML Health Benefits Pool

DATE: August 17, 2021

TO: TML Health Benefits Pool Members – Region 14

FROM: Leah Simon, Board Secretary and General Counsel

RE: Official Ballots for 2021 Board of Trustee Election

Enclosed is your ballot for the 2021 Board of Trustees election for the position for your region for the term of office beginning on October 1, 2021 through September 30, 2024.

All qualified persons' names appear on the ballot. Write-in candidates otherwise duly qualified are eligible for election. Qualified individuals must either be an employee or elected official of an incorporated city within the state of Texas, which is a Member of the Pool at the time of their election. A qualified municipal "employee" must: 1) hold a position of Department Head or higher; 2) work at least 20 hours per week for an incorporated city; 3) be paid by the incorporated city with incorporated city funds; and 4) be hired and fired only by another incorporated city official or by the incorporated city's governing body.

Please see that approval of the ballot is placed on the agenda for consideration at the next meeting of your governing body. Ballots must:

- ☐ ***certify*** that the vote was taken at an official meeting of the governing body;
- ☐ be received no later than 5:00 p.m. (CST) on September 27, 2021 at TML Health Benefits Pool, 1821 Rutherford Lane, Suite 300, Austin, Texas 78754; and
- ☐ as an option, be submitted to the Board Secretary by mail, by facsimile (512) 719-8349 or electronically to BoardSecretary@tmlhb.org prior to the deadline.

Votes will be counted pursuant to the Trust Agreement which provides that "if more than two (2) candidates are running, the person receiving the largest number of votes shall be elected." TML Health Trustees may not serve as both a voting member of TML Health's Board and as a voting member of the Texas Municipal League or the TML Intergovernmental Risk Pool Board of Trustees.

If you have any questions, please contact me at (512) 719-8349.

Attachments

REGULAR SESSION CITY COUNCIL MEETING PACKET FOR THE MEETING TO BE HELD ON SEPTEMBER 20, 2021

TML Health Benefits Pool Official Ballot

Board of Trustees – TML Region 14

Term of Office

October 1, 2021 – September 30, 2024

Please vote for one candidate.

☐ **Jason E. Reynolds, City Manager, City of Nassau Bay**
It would be an honor to continue serving Region 14 on the TML Health Board. Over the past three years, TML Health has made great strides to better serve its members and facilitating healthcare that members expect. As for me, I currently serve as the City Manager for the City of Nassau Bay and have been blessed to be part of this region for six years. Serving others is part of who I am, as my resume is solely focused on public service and assisting non-profit organizations. I am a true advocate for the region and believe all employees should have access to reasonable healthcare. I will work to ensure practical coverage is available and strategic goals are met. There is a great camaraderie on the board and we will work together to meet your expectations. I take great pride in working to better our wellness in the region and feel I can contribute a lot to our region and TML Health. Outside of TML Health, I have been active in TCMA for nine years; serve on the Public Policy Task Force and the Professional Development Committee. I also assist on a local veteran support board and recently as the TCMA Reg VI President.

☐ **Mike Barrow, City Manager, City of Weimer**
I appreciate my nomination to the TML Health Benefits Pool Board of Trustees and the opportunity to represent Region 14 and serving member cities and their employees. Continuing to provide the quality health care coverage to our members is important, while we continue to find ways to improve services, provide options, and keep costs manageable. In order to gain inside knowledge of insurance underwriters and types of insurance policies, I have held licenses for the sales of life and health insurance, as well as, property and casualty insurance. My past insurance experience and my experiences as City Manager, will assist me in listening to the issues of our members and be a contributing member of our board. I would greatly appreciate your support for my serving you as a TML Health Benefits Pool Board of Trustees member.

☐ **Paula Favors, City Secretary, City of Wharton**
Paula Favors began her career with the City of Wharton in 2006. She is the Assistant City Manager/City Secretary /Human Resource Director, overseeing Municipal Court and the IT Department as well. Mrs. Favors is a strong employee advocate and is committed to being a strategic partner in municipal management. She is a member of the Texas City Manager's Association (TCMA), Texas Municipal Clerks Association (TMCA), International Institute of Municipal Clerks (TMCA), International Institute of Municipal Clerks (IIMC), Society of Human Resource Management (SHRM) as well as several other professional organizations. She is a former President of the Municipal Clerk Association Salt Grass Chapter as well as serving on all positions of the Board. She is an Advanced Public Information Officer, a Certified Texas Municipal Clerk and a Certified Public Manager.

☐ _____

Write-In Name of Otherwise Duly Qualified Elected/Appointed Official

Please complete certification of ballot and sign on the next page.

REGULAR SESSION CITY COUNCIL MEETING PACKET FOR THE MEETING TO BE HELD ON SEPTEMBER 20, 2021

Important Notes for Submitting Your Ballot:

- ✓ *Because of recent delays in USPS deliver, please consider using the electronic form version emailed to your Benefits Coordinator to ensure on-time delivery.*
- ✓ *Remember that the date of the governing body's meeting authorizing the ballot cannot occur prior to the date your ballot was issued to your entity. For example, ballots emailed/mailed on August 17, 2021 and meeting date must be after August 17, 2021.*
- ✓ Ballots must be received by 5:00 pm on September 27, 2021, and may be submitted by mail, by facsimile or electronically to:

BoardSecretary@tmlhb.org
Facsimile (512) 719-8349
Leah Simon, Board Secretary
TML Health Benefits Pool
1821 Rutherford Lane, Suite 300,
Austin, Texas 78754

Signature

Bobby Warren, Mayor

Title

City of Jersey Village

Entity

REGULAR SESSION CITY COUNCIL MEETING PACKET FOR THE MEETING TO BE HELD ON SEPTEMBER 20, 2021

Lorri Coody

From: Jason Reynolds <jason.reynolds@nassaubay.com>
Sent: Thursday, August 19, 2021 2:49 PM
To: Austin Bleess
Cc: Lorri Coody; James Stokes
Subject: JASON REYNOLDS - TML Health - Region 14

Austin,
I am reaching out to ask for your (Council's) support in the continuation of service to TML Health Board of Trustees – Region 14. Ballots will be delivered soon and I would greatly appreciate the backing.

If you or your Council would like to know more about me, please see the ballot excerpt below:

It would be an honor to continue serving Region 14 on the TML Health Board. Over the past three years, TML Health has made great strides to better serve its members and facilitating healthcare that members expect.

As for me, I currently serve as the City Manager for the City of Nassau Bay and have been blessed to be part of this region for six years. Serving others is part of who I am, as my resume is solely focused on public service and assisting non-profit organizations.

I am a true advocate for our region and believe all employees should have access to reasonable healthcare. I will work to ensure practical coverage is available and strategic goals are met.

There is a great camaraderie on the board, and we will work together to meet your expectations. I take great pride in working to better our wellness in the region and feel I can contribute a lot to our area and TML Health.

Outside of TML Health, I have been active in TCMA for nine (9) years; serve on the Public Policy Task Force and the Professional Development Committee. I also assist on a local veteran support board and recently as the TCMA Reg VI president.

Respectfully,
Jason

Jason E. Reynolds, CPM
City Manager
City of Nassau Bay
P: 281.336.6299 E: jason.reynolds@nassaubay.com

REGULAR SESSION CITY COUNCIL MEETING PACKET FOR THE MEETING TO BE HELD ON SEPTEMBER 20, 2021

Lorri Coody

From: Austin Bleess
Sent: Thursday, August 19, 2021 5:32 PM
To: Lorri Coody
Subject: MIKE BARROW - Region 14 TML Health Benefits Pool Board of Trustees

Austin Bleess, MPA, ICMA-CM
City Manager | Jersey Village, Texas
(p) (713) 466-2109

From: Mike Barrow <citymgr@weimartexas.org>
Sent: Tuesday, August 3, 2021 4:04 PM
To: Austin Bleess <ableess@jerseyvillagetx.com>
Subject: Region 14 TML Health Benefits Pool Board of Trustees

Good afternoon Austin.

I am sending a shout out to all of our member cities in Region 14.

I would appreciate City of Jersey Village's vote for me representing Region 14 TML Health Benefits Pool Board of Trustees.

Thank you again Austin.

Mike Barrow

REGULAR SESSION CITY COUNCIL MEETING PACKET FOR THE MEETING TO BE HELD ON SEPTEMBER 20, 2021

Dear TML Region 14 Members,

I appreciate my nomination to the TML opportunity to represent Region 14 and ser

Continuing to provide the quality health ca continue to find ways to improve services,

In order to gain inside knowledge of insurance licenses for the sales of life and health insura insurance experience and my experience as Ci members and be a contributing member of our

I would greatly appreciate your support for my s member.

Sincerely,



REGULAR SESSION CITY COUNCIL MEETING PACKET FOR THE MEETING TO BE HELD ON SEPTEMBER 20, 2021

Mike Barrow, CPM
City Manager
City of Weimar Texas
979-725-8554

Lorri Coody

From: saltgrasschapter@googlegroups.com on behalf of Paula Favors <pfavors@cityofwharton.com>
Sent: Wednesday, August 25, 2021 8:03 AM
To: SaltGrassChapter
Subject: [Salt Grass Chapter} TML Health Benefits Pool Board Trustee Election

Salt Grass Chapter-

If your city recently received a ballot for the TML Health Benefits Pool Board Trustee Election for Region 14, I am asking for your vote.
As the Assistant City Manager overseeing the office of City Secretary and the Human Resources Department, I have worked first hand with employees and their benefit needs for over ten years. I believe that affordable health insurance coverage is a priority. My goal is keeping health insurance affordable to the employees, their dependents and our cities. Also, I believe it is a priority to see that the TML Health Benefits Pool continues to remain in a strong financial position.

I ask that you consider casting your ballot for me in the TML Health Benefits Pool Board Trustee Election.

Thank you,

Paula Favors, TRMC,CPM,MMC
City Secretary/Assistant City Manager
Advanced Public Information Officer
City of Wharton
120 E. Caney Street
Wharton, TX, 77488
https://gcc02.safelinks.protection.outlook.com/?url=http%3A%2F%2Fwww.cityofwharton.com%2F&data=04%7C01%7Clcoody%40jerseyvillagetx.com%7Cf2999711bf5041260b3308d967c8b3be%7Ce67a48990a084595ae5fc1d052866511%7C0%7C0%7C637654934679515092%7CUnknown%7CTWFpbGZsb3d8eyJWIjoiMC4wLjAwMDAiLCJQIjoiV2luMzIiLCJBTiI6Ik1haWwiLCJXVCI6Mn0%3D%7C1000&sdata=FsbNXXF6Iq4K47dl8%2BsIDiXwqrLbBNyOiLHvnEJAKUc%3D&reserved=0
Phone: 979-532-2491 x225
Fax: 979-532-0181

ATTENTION OFFICIALS!

REGULAR SESSION CITY COUNCIL MEETING PACKET FOR THE MEETING TO BE HELD ON SEPTEMBER 20, 2021

A "Reply to All" of this e-mail could lead to violations of the Texas Open Meetings Act, please reply only to the sender.

--
Your ListServ Committee for 2021 is Angela Smith - asmith@clevelandtexas.com. If you need to change your email address or need to add someone, just email.

You received this message because you are subscribed to the Google Groups "Salt Grass Chapter" group.
To unsubscribe from this group and stop receiving emails from it, send an email to saltgrasschapter+unsubscribe@googlegroups.com.
To view this discussion on the web visit https://gcc02.safelinks.protection.outlook.com/?url=https%3A%2F%2Fgroups.google.com%2Fd%2Fmsgid%2Fsaltgrasschapter%2F985341222.1277564.1629896584006.JavaMail.zimbra%2540cityofwharton.com&data=04%7C01%7Clcoody%40jerseyvillagetx.com%7Cf2999711bf5041260b3308d967c8b3be%7Ce67a48990a084595ae5fc1d052866511%7C0%7C0%7C637654934679515092%7CUnknown%7CTWFpbGZsb3d8eyJWIjoiMC4wLjAwMDAiLCJQIjoiV2luMzIiLCJBTiI6Ik1haWwiLCJXVCI6Mn0%3D%7C1000&sdata=%2FpaK9QN8A%2FBtyyqXaCd804EO8LEn0FuEFwPc9lxGLjM%3D&reserved=0.

CITY COUNCIL
CITY OF JERSEY VILLAGE, TEXAS
AGENDA REQUEST

AGENDA DATE: September 20, 2021

AGENDA ITEM H3

AGENDA SUBJECT: Consider Resolution No. 2021-64, designating a city representative and an alternate representative to the Houston-Galveston Area Council's 2022 General Assembly.

Department/Prepared By: Lorri Coody, City Secretary

Date Submitted: September 2, 2021

EXHIBITS: Resolution No. 2021-64
Letter from Chuck Wemple
2021 HGAC Annual Report

BUDGETARY IMPACT:	Required Expenditure:	$
	Amount Budgeted:	$
	Appropriation Required:	$

CITY MANAGER APPROVAL: NMC

BACKGROUND INFORMATION:

Houston Galveston Area Council (HGAC) has requested the City's participation in selecting a City representative for the Houston Galveston Area Council 2022 General Assembly.

Mayor Andrew Mitcham was the designated representative and Councilmember Drew Wasson was the designated alternate representative for the Houston Galveston Area Council 2020 General Assembly.

This item is to designate a city representative and alternate representative to the Houston Galveston Area Council 2022 General Assembly. A virtual meeting of Home Rule city representatives will be called on November 8, 2021.

RECOMMENDED ACTION

MOTION: To approve Resolution No. 2021-64, designating a city representative and an alternate representative to the Houston-Galveston Area Council's 2022 General Assembly.

REGULAR SESSION CITY COUNCIL MEETING PACKET FOR THE MEETING TO BE HELD ON SEPTEMBER 20, 2021

RESOLUTION NO. 2021-64

A RESOLUTION OF THE CITY COUNCIL OF THE CITY OF JERSEY VILLAGE, TEXAS, DESIGNATING A CITY REPRESENTATIVE AND AN ALTERNATE REPRESENTATIVE TO THE HOUSTON-GALVESTON AREA COUNCIL'S 2022 GENERAL ASSEMBLY.

BE IT RESOLVED BY THE CITY COUNCIL OF THE CITY OF JERSEY VILLAGE, TEXAS

THAT, Council Member _____ be and is hereby designated as its Representative to the **GENERAL ASSEMBLY** of the Houston-Galveston Area Council for the year 2022.

FURTHER, that the Official Alternate authorized to serve as the voting representative should the hereinabove named representative become ineligible, or should he/she resign, is Councilmember _____.

THAT, the Executive Director of the Houston-Galveston Area Council be notified of the designation of the hereinabove named representative and alternate.

PASSED AND APPROVED this the **20th day** of **September 2021**.

_____
Bobby Warren, Mayor

ATTEST:

_____
Lorri Coody, City Secretary

CITY OF JERSEY VILLAGE TEXAS A TEXAS STAR COMMUNITY

REGULAR SESSION CITY COUNCIL MEETING PACKET FOR THE MEETING TO BE HELD ON SEPTEMBER 20, 2021

HOUSTON–GALVESTON AREA COUNCIL
OFFICE OF THE EXECUTIVE DIRECTOR

REGULAR SESSION CITY COUNCIL MEETING PACKET FOR THE MEETING TO BE HELD ON SEPTEMBER 20, 2021

To: Mayors – Home Rule Cities
Subject: 2022 General Assembly Designations
From: Chuck Wemple
Date: September 1, 2021

As we approach 2022, the Houston-Galveston Area Council will be entering its 56th year of public service. We continue to explore new opportunities to better serve our members through ever evolving programs and innovative services. The General Assembly and Board of Directors are vitally instrumental in the agency's course of action during these unprecedented times. As Mayor, you have the opportunity to play a unique role in our future by designating the City Councilmembers that will represent your city at the annual gathering of our General Assembly.

I've attached a form for your city's use in officially designating a representative and an alternate. The two designees must be elected official members of your city's governing body. Please return the completed form by email to laura.parker@h-gac.com.

A dinner meeting of Home Rule city representatives is scheduled for the evening of November 8, 2021. At that meeting, your 2021 Home Rule Cities' H-GAC Board of Directors representatives will report on this year's activities and we will look ahead to issues and progress in 2022.

We are sending a copy of these designation materials to your city secretary as well. We would appreciate receiving your city's designation form **by October 29.**

If more information concerning General Assembly membership would be useful, please contact me at 713-993-4514 or Rick Guerrero at 713-993-4598. Thank you again for your city's continuing participation and support for the Houston-Galveston Area Council.

Sincerely,

Chuck Wemple

CW/cj

Attachment
cc: City Secretary

2020 ANNUAL REPORT

Houston-Galveston Area Council

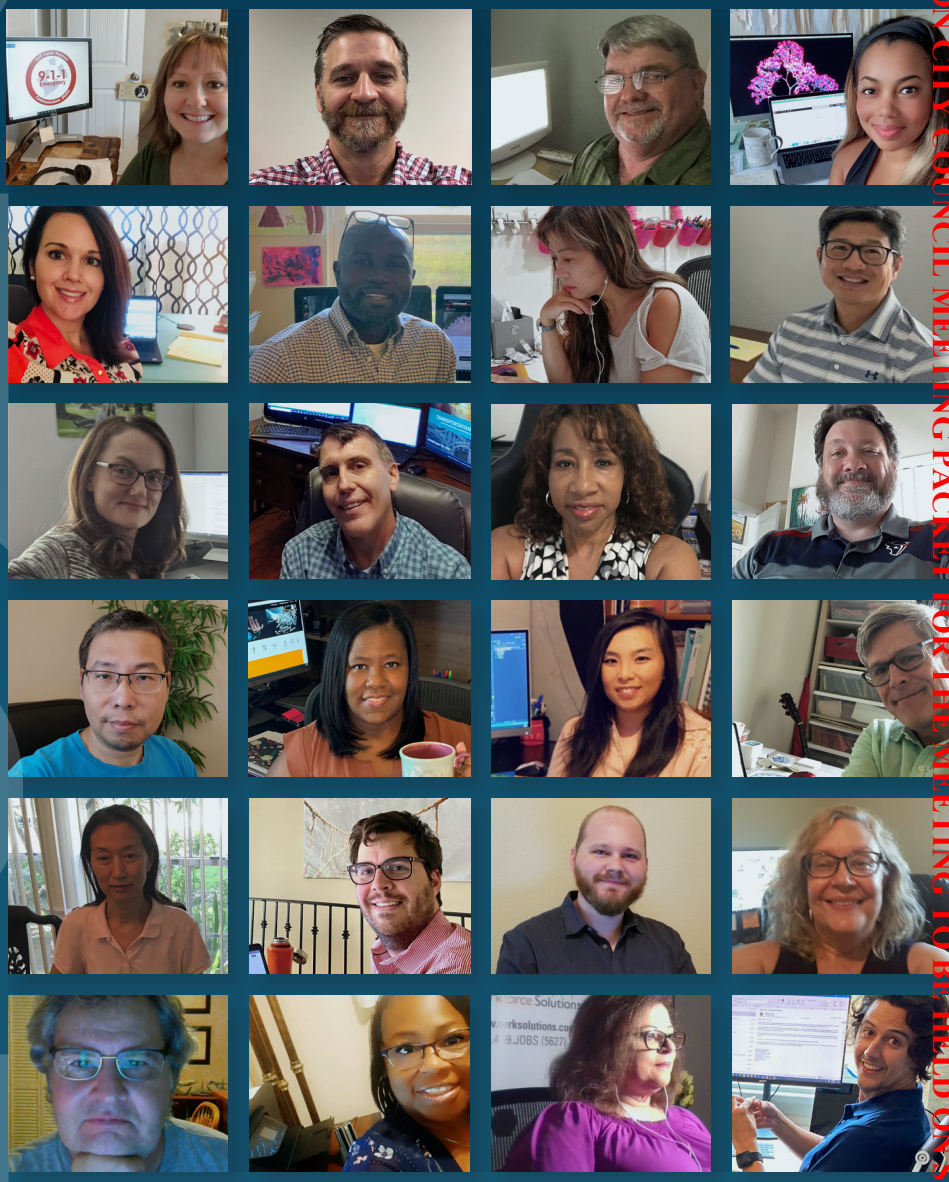

A Year of Resilience

HOUSTON-GALVESTON AREA COUNCIL

REGULAR SESSION CITY COUNCIL MEETING PACKET FOR THE MEETING TO BE HELD ON SEPTEMBER 20, 2021



NANCY ARNOLD
Board Chair

From Our Chair

We might be tempted to paint 2020 in dark colors, accented with tales of gloom and negativity. But that is not the case for the Houston-Galveston Area Council. While certainly challenging – a theme often heard in all segments of society – we experienced significant highlights worthy of proudly acknowledging.

When it became obvious that we would not be able to work in our offices, we quickly pivoted to a digital environment for our employees. By year's end, we had almost seamlessly replicated our office environment onscreen, whether holding department meetings or putting on a full-blown seminar. The milestones you'll read about in this report are shining examples of the kind of success that can be achieved with such seamless continuity of service and a cooperative spirit.

Our H-GAC team has demonstrated incredible attitude and effort during this unsettling year, and we are a stronger, better organization going into 2021. We are in a continual learning mode of how to successfully operate in the face of sometimes daunting challenges, and we stand ready to use our experience and flexibility to assist our region with its challenges and opportunities. We welcome the new year and new opportunities to serve you.



CHUCK WEMPLE
Executive Director

From Our Executive Director

It's been quite a year. 2020 threw a lot our way, and our agency leaned into the challenges that came our way. We kept our traditional programs and services strong and rapidly pivoted to add additional resources and assistance to our members that helped our region navigate its way through the disruptions of 2020 and look towards a bright 2021. This would not have been possible without the support of our board and the fantastic team of dedicated public servants at H-GAC. Our team transitioned to remote work, stayed focused on the tasks at hand, pulled together when times were tough, and listened for opportunities to help our members, the people, and communities of our region. The 2020 Annual Report, and our first ever annual service video, illustrate some of that hard work and innovation. It's difficult to capture all we do between the covers of a report and a brief video. To find out more about the services available to our members, and to see where we can work together, please visit our website at h-gac.com or reach out to us via email or phone.

We look forward to a new year of promise and opportunity. We are excited to move forward on projects that will increase access to high-speed internet, establish a framework for transportation planning in our rural areas, and create even more opportunities to sit down with you and provide insight and data tools to help you improve the quality of life in your communities.

Keeping the lines of communication open is critical to the success of our agency and our region. Don't hesitate to get in touch and let us know how we can serve you better. Our team believes in continuous improvement and exceptional service. We stand ready to serve you, the 13 counties, 108 cities, and more than 7 million people who call our region home.

2020 MILESTONES

The Mission Continues Virtually

On March 6, the H-GAC Data Services team began plans to transition the agency from a primarily office-based to remote work setting. Applying virtual communications programs and best practices adopted after Hurricane Harvey, the team built the secure infrastructure, expanded network bandwidth, and acquired all the necessary hardware for all H-GAC staff members to go fully remote – a process completed in just 11 days. Thanks to their efforts, H-GAC was able to continue serving the region with minimal disruption and take the lead in helping fellow councils of government and local entities smoothly transition their staff and constituents to operating virtually.



Helping Our Region Forge Ahead

Every city, county, and community has been impacted by the COVID-19 pandemic. Because H-GAC was able to so quickly shift operations to a remote work environment, its leaders and staff got right to work helping the region endure the worst effects of the pandemic and begin the road to recovery. In March 2020, the board of directors authorized the expansion of H-GAC services to provide immediate assistance to local governments, major employers, small businesses, and, most importantly, residents and their families.

FOSTERING REGIONAL COOPERATION

Within days of the issue of the first stay at home orders, H-GAC was already hard at work preparing local governments, agencies, and employers for conducting business in a virtual environment. H-GAC hosted webinars on how to run board, committee, and public meetings virtually while maintaining transparency and engagement with the public. Commute Solutions team members presented planning documents and best practices for managers on maintaining productivity and accountability, and for staff on keeping a positive work-life balance while teleworking. H-GAC also hosted virtual roundtables joining mayors and city managers in discussing best practices in handling the pandemic in their community and preparing for revenue shortfalls.

SERVING OUR SENIOR COMMUNITIES

When nursing homes and assisted living facilities suspended congregate meals as part of social distance safety measures, the Houston-Galveston Area Agency on Aging immediately converted to delivering meals curbside so that our region's seniors could still receive hot, nutritious meals. Since March 15, staff and volunteers have delivered thousands of meals to senior communities in Austin, Brazoria, Chambers, Colorado, Fort Bend, Galveston, Liberty, Matagorda, Montgomery, Walker, Waller, and Wharton counties. The Area Agency on Aging also continues to provide services such as Medicare benefits counseling and advocacy for resident rights by ombudsman either virtually or by phone through the pandemic.

SUPPORTING SMALL BUSINESSES

In April 2020, Harris County and the Houston-Galveston Local Development Corporation launched the COVID-19 Forgivable Loan Program to provide immediate relief for small businesses in Harris County. The program provided interest-free loans of up to $25,000, which would be forgiven after five years. The local development corporation administered more than $9.9 million in loans to more than 440 applicants. The small business loan model has drawn significant interest and is being replicated in several other Houston-Galveston area counties, such as Fort Bend. In addition, the local development corporation has provided bridge loans to small businesses awaiting federal CARES Act funding as well as low-interest, government-backed financing options for our region's budding entrepreneurs. Towards the end of 2020, Harris County small businesses received additional relief when all of the distributed COVID-19 forgivable loans were converted to grants.

CONNECTING PEOPLE TO EMPLOYERS AND SUPPORTING OUR EVERYDAY HEROES

Since March 2020, Workforce Solutions has hosted weekly Facebook live sessions, virtual job fairs, and job search seminars to help unemployed and recent graduates connect with employers in the region and find new jobs quickly. One Houston-area resident who lost his job was able to find an even higher-paying job in just over a month thanks to participating in these virtual events.

In November 2020, Workforce Solutions in partnership with the Texas Workforce Commission, the Texas Medical Center, and the Texas Veterans Commission, took the annual Hiring Red, White & You! job fair – the region's largest hiring event for veterans and their families – fully virtual. The agency has also partnered with LinkedIn Learning, Coursera, Walmart, the Dallas Workforce Board, and others to provide free online education courses to help unemployed workers maintain their skillsets and help essential workers develop their careers. In April 2020, Workforce Solutions, together with Collaborative for Children, launched FindChildCareNow.org, an online resource that aided essential workers in finding quality, affordable childcare for their families.

Staff continued offering services from Workforce Solutions career centers either curbside or by phone. In October 2020, a new career office in Missouri City, Texas, opened, bringing the total number in the region to 28.

REGULAR SESSION CITY COUNCIL MEETING PACKET FOR THE MEETING TO BE HELD ON SEPTEMBER 20, 2021



DRIVING ECONOMIC RECOVERY

To assist cities and municipalities in understanding the economic impacts to their sales tax revenues, H-GAC adopted a forecast tool developed by the San Diego Association of Governments – the San Diego region's primary planning agency. By inputting local sales data and assumptions unique to a community's situation, the tool outlines up to 40 possible scenarios on how severe the revenue shortfall can be and how long it might take to recover. The scenarios are adaptable and can be changed based on new or updated information. Six cities and one county – including Deer Park, Kemah, Houston, La Porte, Seabrook, Waller, and Wharton County – requested forecast reports utilizing the tool.

To ensure as many economic recovery projects in the region as possible had a fighting chance for federal CARES Act grant funding, the Gulf Coast Economic Development District provided a free webinar with a guided walkthrough of the application process. The economic development district also released weekly resource digests to help local partners stay on top of the sometimes-overwhelming volume of new funding opportunities. It has hosted complimentary webinars that go even more in depth and on topics like financial resilience, infrastructure development, and disaster response.







Keeping Local Governments Moving

The Houston-Galveston Area Council helped our local governments successfully pivot to a virtual environment by quickly assembling valuable resources such as webinars and trainings, data resources, funding opportunities, and educational materials on how to set up a virtual workplace.

HOLDING PUBLIC MEETINGS VIRTUALLY

During the onset of the pandemic, H-GAC helped local governments prepare to conduct business virtually and maintain operational continuity. H-GAC staff provided technical assistance and guidance on how to conduct virtual board meetings in compliance with the Texas Open Meetings Act and pivot to a virtual work environment.

WEBINARS, TRAININGS & RESOURCES

H-GAC hosted webinars that helped local governments pivot to a virtual environment and created a webinar hub for easy access of information and additional training resources.

SETTING UP A VIRTUAL WORKPLACE

Telework or "work from home" programs became necessary to keep local governments moving forward during the pandemic. To help alleviate this process of setting up a virtual work environment, H-GAC complied resources and information to make the transition as efficient and successful as possible for cities, counties, and their staff.

SALES TAX REVENUE FORECASTING TOOL

H-GAC developed tools and datasets to assist member governments in navigating the economic impacts of the COVID-19 pandemic. One tool is a rapid forecast of local sales tax impacts and economic recovery scenarios. This forecast projects short-term impacts to sales tax revenue and provides forecasts on recovery rates based on a variety of scenarios.

2020 CENSUS OUTREACH

H-GAC partnered with local governments to continue regional outreach for the 2020 U.S. Census and connect with hard-to-reach populations. The social media, digital, radio, and direct mail campaign reached more than 2 million people, helping the region ensure an accurate population count.

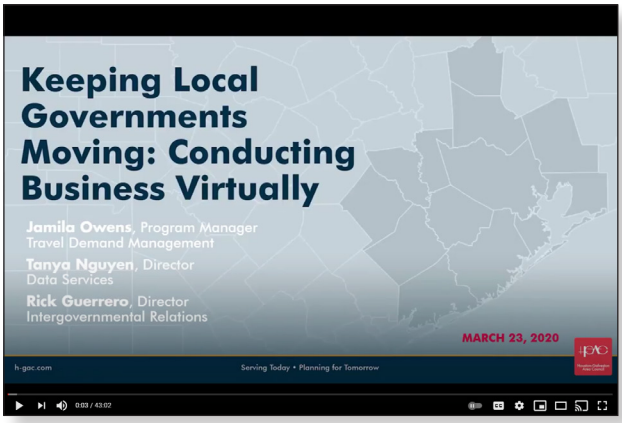

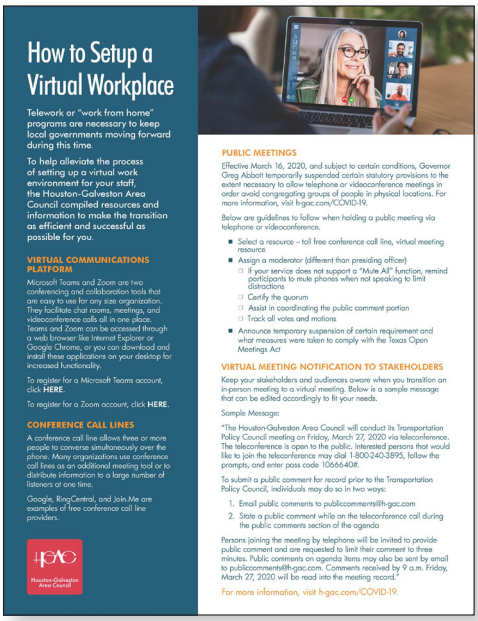

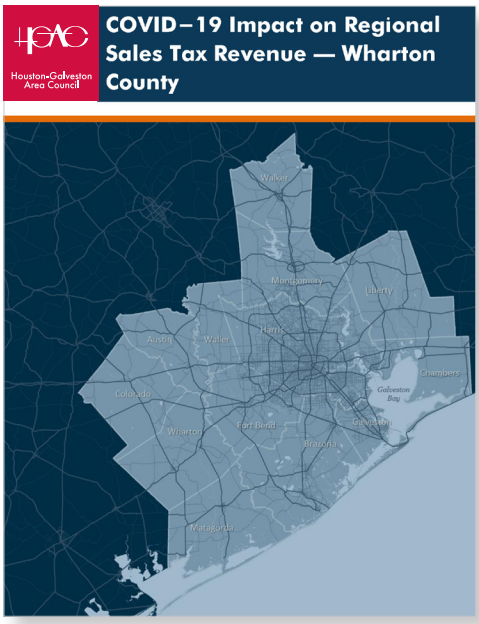

Becoming More Equitable and Inclusive

While diversity and inclusion have been longstanding values at H-GAC, 2020 has brought this issue into sharp focus. In early July 2020, H-GAC held a series of internal listening sessions where staff had forthright conversations about whether we were truly doing all we could to create an equitable, inclusive region for everyone.

We listened closely. Out of these conversations emerged the race, equity, and inclusion work group. This work group – composed of H-GAC staff and leaders – is taking a thoughtful and purposeful approach to developing the right actions to substantially and positively impact our agency culture and our communities. Many items are in the works, such as instituting stronger protections against discrimination, professional development right from the hiring process, a community voices speaker series, and events that celebrate diversity and inclusion. In addition, H-GAC departments and programs are examining their own planning processes to determine how they can make their programs more accessible to minority and underserved businesses and communities, and better address social, economic, environmental, and infrastructural inequities where they exist in the region.

All of this is being done with the goal of better understanding our region, each other, and finding ways to ensure that everyone who calls our region home has the opportunity to succeed. H-GAC honors, respects, and promotes the great diversity of our region while serving today and planning for tomorrow.

H-GAC EQUITY WORKING GROUP



H-GAC's Equity Working Group is taking a thoughtful and purposeful approach to developing the right actions to substantially and positively impact our culture and our communities.

Planning the Future of Transportation

The COVID-19 pandemic has rapidly changed the way residents move throughout the region. More people are biking, walking, and teleworking than ever before. Increases in online deliveries highlight the need for strong freight and movement of goods. And while the number of vehicles traveling the roads has decreased, fatalities have not. The volatility of this year has demonstrated the critical importance of transportation. Our network must be interconnected, taking advantage of the latest innovations, and multimodal to account for evolving traveling habits. It must be adaptable to our rapid growth and development. It must be resilient against disasters and a changing environment. Most importantly, it must be safe and reliable for everyone who uses it. In 2020, H-GAC completed studies and launched key initiatives that will lay the foundations for the transportation system of the future.

MEETING COMPLEX PROBLEMS WITH BOLD SOLUTIONS

The North Houston Highway Improvement Project stands to be one of the most transformative infrastructure projects our region will see in a generation. The H-GAC Transportation Policy Council took the lead in encouraging collaboration and shared governance by spearheading the creation of a memorandum of understanding between the key cooperating entities of the project – the Texas Department of Transportation, Harris County, the City of Houston, the Metropolitan Transit Authority of Harris County (METRO), and the Harris County Flood Control District. If adopted, this memorandum will showcase the entities' commitment to working together on advancing the project while also addressing the key concerns from communities that will be directly impacted.

ADVANCING MOBILITY IN THE REGION

In the summer of 2020, the Transportation Policy Council approved the 2020-24 Transportation Improvement Program, which names hundreds of priority improvement projects to our region's roadways, streets, public transit system, and freight network that will ensure our transportation network remains safe, reliable, and sustainable now and in the decades to come. Standout projects include upgrades to several sections of IH 10, SH 99, and Hempstead Highway that will help relieve congestion and increase connectivity; development of a new Inner Katy Bus Rapid Transit system along IH 10 from the Northwest Transit Center to Downtown Houston; new park and ride facilities in Sienna Plantation and Texas City; and countless street, sidewalk, and trail improvements for bicyclists and pedestrians.

In May 2020, H-GAC completed the Ports Area Mobility Study, which assessed and recommended improvements that will allow for better movement of goods between the region's four deepwater ports and emerging population and employment centers. Many of these improvements incorporate emerging technologies, such as Hyperloop and EagleRail – a fully automated, electric conveyor system for shipping containers. In February 2020, researchers at Texas Southern University completed an eight-month pilot study assessing the resiliency and performance of an autonomous shuttle as it escorted students, faculty, staff, and visitors along the Tiger Walk promenade. H-GAC provided funding support for the study.

KEEPING OUR ROADWAYS SAFE

In July 2020, the Gulf Coast Regional Tow and Go™ Program – which provides no-cost tows to vehicles that break down due to mechanical failure – expanded its service area to cover all camera-monitored freeways in unincorporated Harris County, Bellaire, La Porte, and Humble, Texas. With this and future expansions already in the works, Tow and Go is leading the way in keeping our freeways clear and motorists safe and on the move. In October, the Transportation Policy Council adopted a resolution to create a regional Vision Zero action plan, with the ambitious goal of eliminating traffic fatalities in the region by 2050. This resolution expands on existing Vision Zero initiatives under way at the City of Houston and Harris County and is in conjunction with the Texas Transportation Commission's Road to Zero policy. In the fall of 2020, H-GAC began a series of audits that will identify traffic intersections in the region at high risk of serious or fatal crash incidents for targeted safety improvements.

REGULAR SESSION CITY COUNCIL MEETING PACKET FOR THE MEETING TO BE HELD ON SEPTEMBER 20, 2021









CONNECTING COMMUNITIES THROUGH LIVABLE CENTERS

The Livable Centers program – which aims to reimagine car-centric infrastructure to create better connected, more walkable and bikeable streets for cities, districts, neighborhoods, and municipalities – received two awards from the American Planning Association – Texas Chapter in 2020. The North Houston Livable Centers Study received the gold award for best urban design in creating a sense of place for a community, and the Houston International Management District Livable Centers Study received the silver award for outstanding achievement in public outreach.

Additionally, Livable Centers made key steps towards increasing community participation in ongoing study areas and study opportunities for economically disadvantaged communities. The Montrose Livable Centers Study introduced a new tool for members of the public to take virtual walking tours in the study area to experience how recommended improvements would look once implemented. Seven new Livable Centers studies kicked off in 2020, and three have been completed.

SUPPORTING OUR TRANSIT AGENCIES

As the pandemic significantly impacted ridership in the region, H-GAC answered the call to support our partners and reassure essential workers that transit remains a safe, convenient, cost-effective travel method. Commute Solutions joined with 10 regional transit, rideshare, and bikeshare providers in May 2020 to host a webinar communicating safety tips for riders to protect themselves during the pandemic. Commute Solutions also dedicated a week of its signature awareness campaign, Commute Solutions Month, to showcase the extensive measures our region's transit and rideshare agencies were applying to protect the health and welfare of its riders and staff.

REGULAR SESSION CITY COUNCIL MEETING PACKET FOR THE MEETING TO BE HELD ON SEPTEMBER 20, 2021

A Model for Organizations Regionally and Nationwide

For its efforts to help the region endure and recover from the pandemic, H-GAC received accolades by state, regional, and national associations. Programs and policies H-GAC developed to operate in a virtual work environment have become models for councils of government across the state and the country.

LEADING THE WAY IN VIRTUAL PUBLIC ENGAGEMENT

In June 2020, H-GAC released a groundbreaking report on using digital tools, applying innovative tactics, and utilizing best practices to connect with and engage a wider, more diverse public audience and how to bridge the digital divide. The report also touched on methods to make virtual public meetings more authentic and personal to members of the community as well as more accommodating to individuals with disabilities. This report was shared with councils of government and metropolitan planning organizations across the country, who are already applying it to modernize and enhance their public engagement tactics.

RECOGNIZED BY STATE AND NATIONAL PEERS

In September 2020, the Texas Association of Regional Councils appointed Chuck Wemple to lead the Executive Directors' Council. Key initiatives Wemple will pursue during his one-year term include funding opportunities for rural transportation planning organizations and increasing broadband access statewide. The association also awarded Honorable Judge Nate McDonald of Matagorda County – who has served on the H-GAC board of directors since 2007 and as chair in 2016 – the Wilbur R. Dunk Award for Regional Leadership for his dedication to fostering regional cooperation through councils of government.

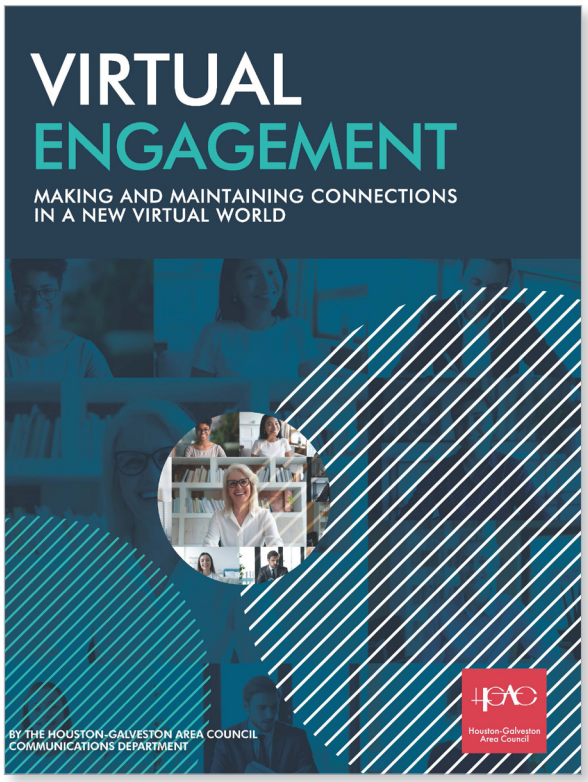



VIRTUAL TEAM H-GAC



H-GAC presented to the Texas Association of Regional Councils and the National Association of Regional Councils on multiple occasions discussing policies and processes such as the virtual public engagement plan, best practices for conducting board, committee, and public meetings virtually, and creating the network infrastructure and policies for staff to work and collaborate remotely. H-GAC leaders also helped drive national policy and direction by serving leading roles on National Association of Regional Councils' committees and its executive council.

Our 2020 Journey



MARCH 6 – H-GAC staff transition to working remotely.

MARCH 17 – The Board of Directors authorizes expansion of H-GAC services to help local governments, employers, small businesses, and residents through the COVID-19 pandemic.

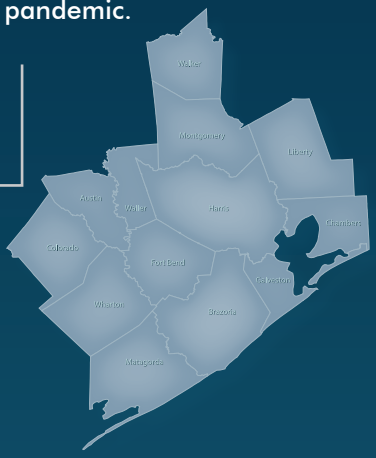

MARCH 15 – The Houston-Galveston Area Agency on Aging converts congregate meals for seniors to curbside delivery service.



JAN FEB MAR APR MAY JUN

APRIL 7 – The Houston-Galveston Local Development Corporation and Harris County launch the COVID-19 Forgivable Loan Program to provide immediate relief to small businesses.

Workforce Solutions



MARCH 24 – Workforce Solutions begins hosting weekly Facebook live sessions, virtual jobs fairs, and seminars to help people find jobs quickly.



REGULAR SESSION CITY COUNCIL MEETING PACKET TO BE HELD ON SEPTEMBER 20, 2021

CommuteSolutions



MAY 21 – Commute Solutions hosts the "Commute with Confidence" webinar with regional transit partners to help employers throughout the region plan a safer commute.

JUNE 26 – The Transportation Policy Council (TPC) spearheads the creation of a memorandum of understanding to encourage collaboration and shared governance on the North Houston Highway Improvement Project.





AUGUST 1 – The Gulf Coast Regional Tow and Go™ Program, which provides no-cost towing off freeways, expands its service area to include all camera-monitored freeways in Harris County, Bellaire, Jersey Village, La Porte, and Humble.

JUL AUG SEP OCT NOV DEC



OCTOBER 23 – The Transportation Policy Council adopts a regional Vision Zero resolution to end traffic fatalities in the eight-county metropolitan planning area by 2050.



NOVEMBER 30 – The final Harris County COVID-19 small business forgivable loan is converted, bringing the total to 444 loans converted into grants.

The Road Ahead

The old adage of Murphy's Law says anything that can happen will happen. 2020 fits that to a tee. It has been a challenging year. However, our work at H-GAC has not stopped nor has momentum diminished. With flexibility and quick thinking, H-GAC positioned itself as a pillar of support for businesses and communities impacted by the pandemic and economic downturn. We're taking the successes and lessons learned to prepare for the road ahead.

We've learned that we must be adaptable and proactive in anticipating the needs of our region. That is why we have adopted planning strategies and initiatives that create better resiliency, flexibility, and look to the technologies and trends of the future. We understand the significance of the digital divide, which is why we have embraced virtual technologies and outreach strategies that ensure as many people as possible, whatever their technological capabilities, have a voice. Additionally, we're partnering with our local leaders and stakeholders to close the digital divide in Texas by pushing for broadband access for all, regardless of location, income, or accessibility.

We've learned the true value of collaboration within our agency, with our partners, and with our fellow councils of government. That is why we're embracing new processes that foster more teamwork across programs and agencies. We recognize the importance of diversity and inclusivity, so we're opening ourselves to more diversity within our agency and to more diversity in who we work with outside of H-GAC. We're building relationships with a wider range of community leaders, colleges and universities, and planning organizations as well as creating more opportunities for people to have a say in our planning processes.

We can't predict exactly what will happen in the years to come, but never has H-GAC been more prepared. The lessons learned from 2020 have made us more flexible, collaborative, and inclusive as a team and as an agency. Our board and our team stand ready to carry our region and the 7 million people who live and work here through the hardest and the greatest the future has to offer.

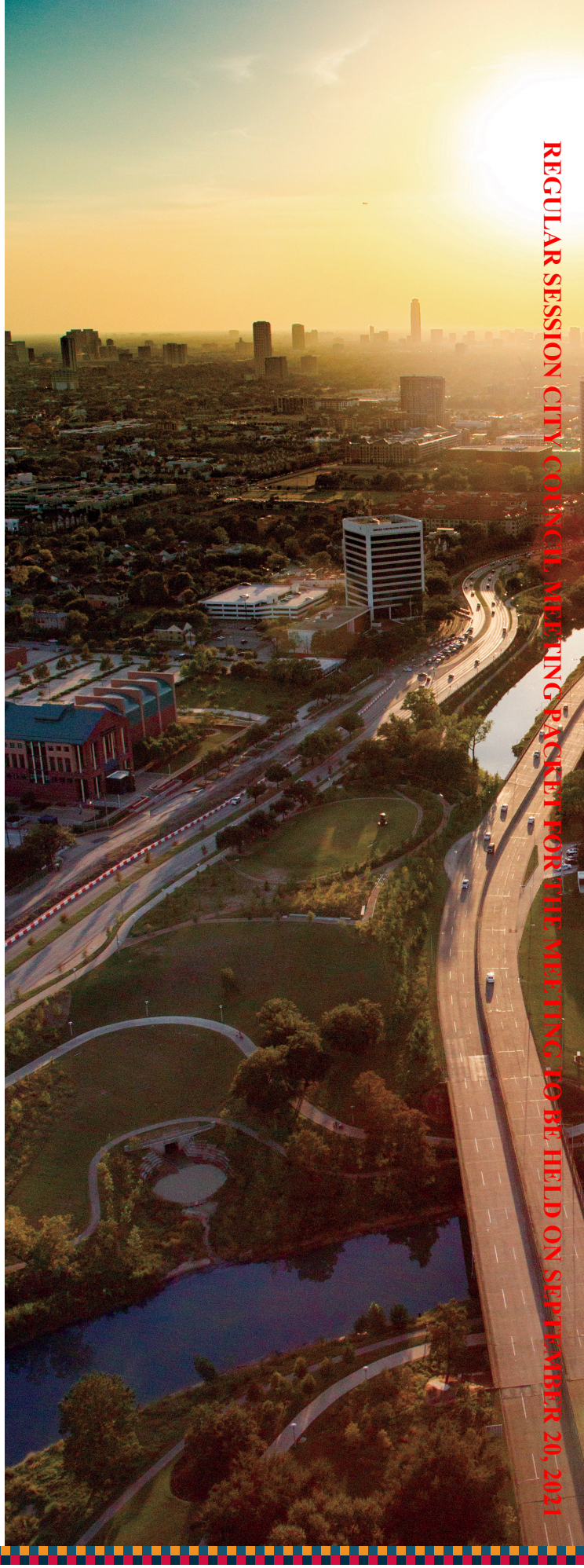

REGULAR SESSION CITY COUNCIL MEETING PACKET FOR THE MEETING TO BE HELD ON SEPTEMBER 20, 2021

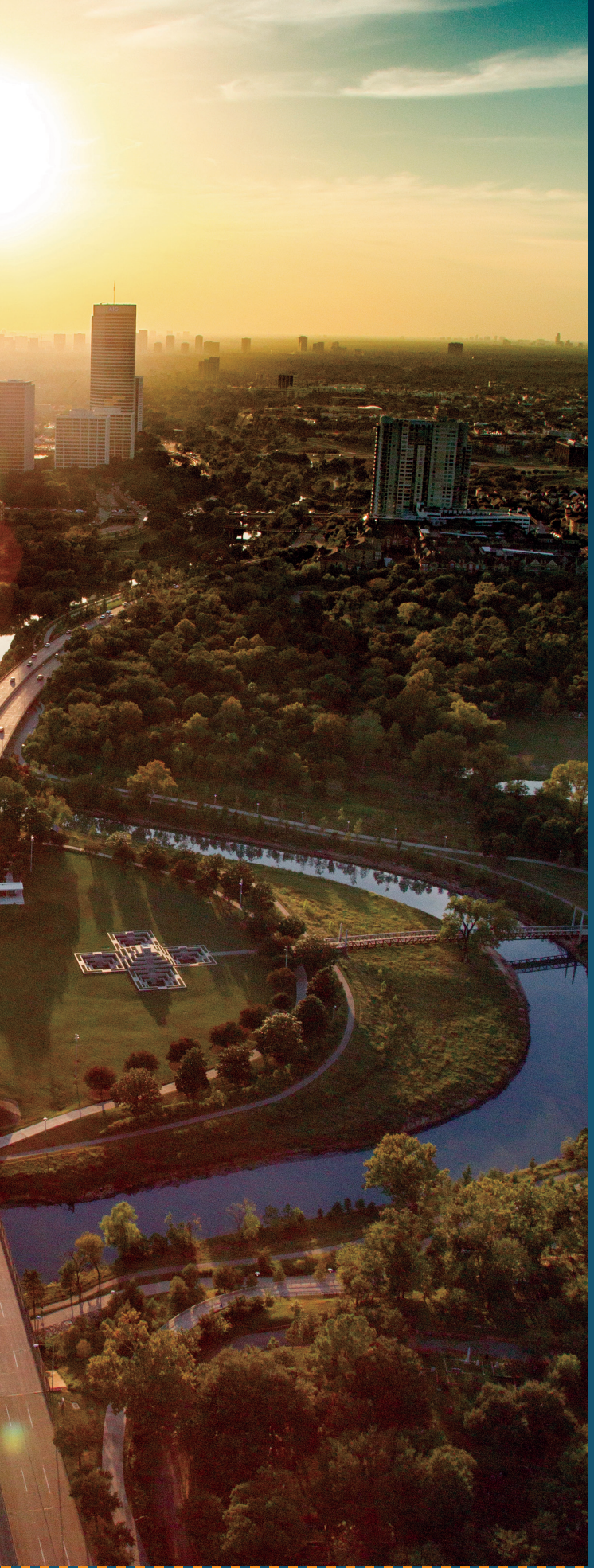

The Impact of Covid-19 on Regional Mobility

Although the data presented in the Mobility Report covers 2019, additional information is provided to examine the impact of the COVID-19 pandemic on the regional transportation system during the first half of 2020. The region's response to the pandemic and subsequent mitigation efforts, such as social distancing guidelines, stay home orders, and mandatory closure of businesses, has had a dramatic effect on travel patterns in the Houston-Galveston area over the last several months.

VEHICULAR TRAVEL

The Houston-Galveston Area Council's Transportation Department monitors regional travel volumes with a platform that collects travel data from GPS capable devices. Figure 1 illustrates the percentage of daily Vehicle Miles Traveled (VMT) as compared to the baseline date of March 7. Following the issuance of a federal emergency declaration on March 13 and declaration of Texas public health disaster on March 19, there was a sharp decline in daily VMT throughout the region.

With the March 19 Texas public health disaster declaration came prohibition of groups larger than 10, closure of gyms, bars, and schools, and change to takeout only at restaurants. From this date onward, the region sustained traffic volumes significantly lower than baseline as mitigation measures continued. Regional travel declined 70% to nearly 90% of baseline volumes through the end of April, when the statewide stay home order expired. Since initiating Phase I of the reopening of Texas on May 1, there has been a steady rise in regional travel. However, even as most businesses reopened to some capacity as Phase II began on May 18, travel in the region has remained still approximately 50% lower than pre-pandemic volumes.

Figure 1: Percent of Baseline Vehicle Miles Traveled

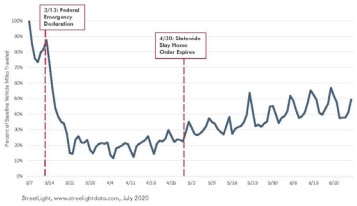

StreetLight, www.streetlightdata.com, July 2020

Figure 2: Freeway Speeds Before & After COVID-19

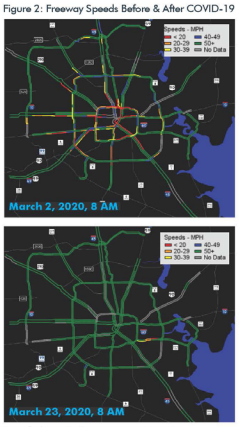

Houston TranStar, http://traffic.houstontranstar.org/map_archive

As a result of decreased vehicular volumes, travel speeds throughout the region have increased. Comparing the first Monday of March, before the region's first case of COVID-19, to the third Monday, after state and federal emergency health declarations, most major freeways experienced congestion-free speeds.



Regional High-Speed Internet Strategy

Approved by the GCEDD Board on:
July 10, 2020

GULF COAST ECONOMIC DEVELOPMENT DISTRICT

Houston-Galveston Area Council

REGULAR SESSION CITY COUNCIL MEETING PACKET FOR THE MEETING TO BE HELD ON SEPTEMBER 20, 2021

Financials and Auditing

In 2020, the H-GAC finance department initiated an automated billing portal to allow subrecipients to bill H-GAC electronically. This system will be fully integrated with the contract management system and the accounting system, resulting in a more efficient and transparent payment process. Completion is anticipated in early 2021. To account for the pandemic, many processes transitioned to secure, electronic formats. Accounting completed annual audits and multiple grantor monitoring reviews remotely with no fiscal findings or questioned costs. More than 3,600 electronic payments totaling more than $369 million were distributed to vendors and subrecipients, and 182 grant programs were fiscally administered. These grant programs included more than 270 projects across 10 departments. Additionally, accounting staff provided training for more than 100 local government attendees on new federal requirements for grant administration.

PERCENTAGE OF FUNDING BY SOURCE

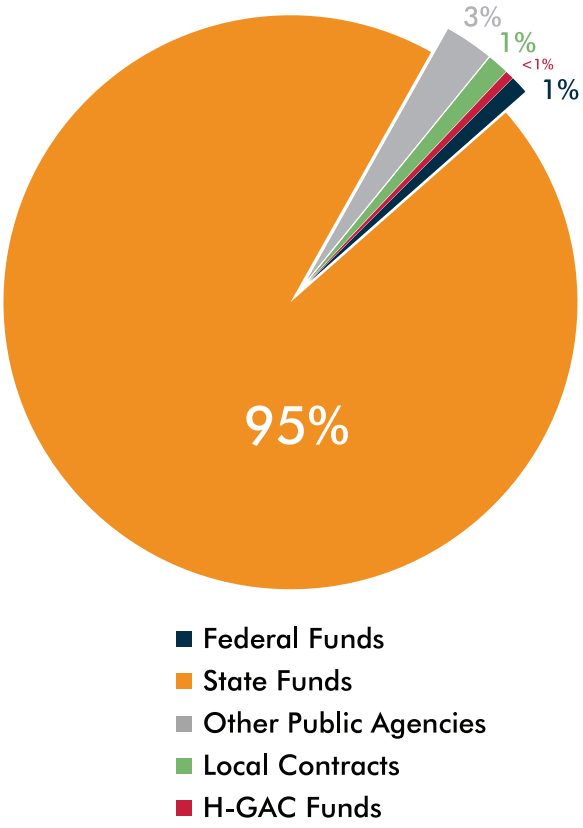

PERCENTAGE OF EXPENDITURES BY PROGAM

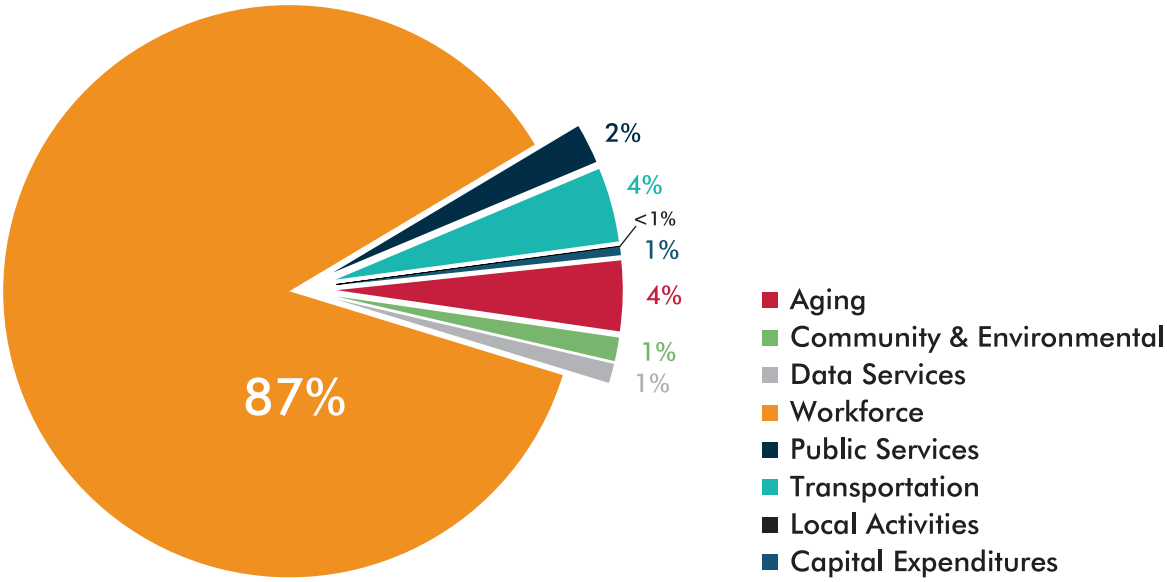

H-GAC's unified budget for 2020 is presented below. This summary provides an overview of the funding streams and anticipated expenditures by program area. Budget documents and audit reports can be viewed at h-gac.com. In addition to the independent annual audit, H-GAC routinely undergoes monitoring and evaluation by funding partners and the internal auditing department. The internal auditing staff conducts pre-award assessments, contracts compliance inspections, and works with departments across the agency to identify process improvement opportunities.

EXPENDITURE BY PROGRAM

Aging	$14,840,938
Community & Environmental	$4,982,651
Data Services	$4,108,948
Workforce	$324,018,982
Public Services	$8,364,061
Transportation	$15,675,765
Local Activities	$119,800
Capital Expenditures	$1,634,000
TOTAL	**$373,745,945**

FUNDING SOURCES

U.S. Environmental Protection Agency	$3,483,784
U.S. Department of Energy	$72,283
U.S. Department of Agriculture	$210,823
Commission on State Emergency Communication	$132,000
Texas Department of Emergency Management	$370,975
Texas Department of Transportation	$11,785,693
Texas Criminal Justice Division	$1,175,454
Texas Workforce Commission	$324,668,883
Texas Commission on Environmental Quality	$2,923,286
Texas General Land Office	$92,848
Department of Aging and Disability Services	$12,577,008
Other Public Agencies	$10,120,941
Local Contracts	$4,362,158
Houston-Galveston Area Council Funds	$1,769,809
TOTAL	**$373,745,945**

REGULAR SESSION CITY COUNCIL MEETING PACKET FOR THE MEETING TO BE HELD ON SEPTEMBER 20, 2021

2020 Board of Directors

AUSTIN COUNTY
The Honorable Tim Lapham
County Judge

BRAZORIA COUNTY
The Honorable Stacy Adams
County Commissioner
Chair

CHAMBERS COUNTY
The Honorable Gary Nelson
County Commissioner

COLORADO COUNTY
The Honorable Ty Prause
County Judge

FORT BEND COUNTY
The Honorable Andy Meyers
County Commissioner

GALVESTON COUNTY
The Honorable Ken Clark
County Commissioner

HARRIS COUNTY
The Honorable Lina Hidalgo
County Judge

The Honorable Adrian Garcia
County Commissioner

LIBERTY COUNTY
The Honorable Jay Knight
County Judge

MATAGORDA COUNTY
The Honorable Nate McDonald
County Judge

MONTGOMERY COUNTY
The Honorable Charlie Riley
County Commissioner

WALKER COUNTY
The Honorable Jimmy Henry
County Commissioner

WALLER COUNTY
The Honorable Trey Duhon
County Judge

WHARTON COUNTY
The Honorable Phillip Spenrath
County Judge
Chair Elect

CITY OF BAYTOWN
The Honorable Charles R. Johnson
Council Member

CITY OF CONROE
The Honorable Raymond McDonald
Mayor Pro Tem

CITY OF DEER PARK
The Honorable Bill Patterson
Council Member

CITY OF FRIENDSWOOD
The Honorable Sally Branson
Council Member

CITY OF GALVESTON
The Dr. Craig Brown
Mayor

CITY OF HOUSTON
The Honorable Sallie Alcorn
Council Member

The Honorable Letitia Plummer
Council Member

CITY OF HUNTSVILLE
The Honorable Andy Brauninger
Mayor

CITY OF LA PORTE
The Honorable Chuck Engelken, Jr.
Council Member

CITY OF LAKE JACKSON
The Honorable Ralph Buster Buell
Council Member

CITY OF LEAGUE CITY
The Honorable Pat Hallisey
Mayor

CITY OF MISSOURI CITY
The Honorable Dr. Cheryl Sterling
Council Member

CITY OF PASADENA
The Honorable Cary Bass
Council Member

CITY OF PEARLAND
The Honorable Tom Reid
Mayor

CITY OF ROSENBERG
The Honorable William Benton
Mayor

CITY OF SUGAR LAND
The Honorable Joe Zimmerman
Mayor

CITY OF TEXAS CITY
The Honorable Phil Roberts, Jr.
Commissioner at Large

HOME RULE CITIES
The Honorable William King, III
Council Member, City of Dickinson

The Honorable Natalie Picha
Council Member, City of Seabrook

GENERAL LAW CITIES
The Honorable Nancy Arnold
Council Member, City of Waller
Chair Elect

The Honorable Joe Garcia
Mayor, City of Pattison

INDEPENDENT SCHOOL DISTRICTS
The Honorable Rissie Owens
Trustee, Huntsville ISD

REGULAR SESSION CITY COUNCIL MEETING PACKET FOR THE MEETING TO BE HELD ON SEPTEMBER 20, 2021

2020 Board of Directors Officers



HON. NANCY ARNOLD
Chair

Councilmember
City of Waller



HON. PHILLIP SPENRATH
Chair Elect

County Judge
Wharton County



HON. WILLIAM KING, III
Vice Chair

Councilmember
City of Dickinson



The board of directors is composed of 36 elected officials representing 13 counties, 108 cities, and 11 school districts. The board leads collaborative efforts with local governments that consider regional issues and fosters cooperation in solving area-wide challenges.

REGULAR SESSION CITY COUNCIL MEETING PACKET FOR THE MEETING TO BE HELD ON SEPTEMBER 20, 2021

General Assembly

COUNTIES (13)

Austin
Brazoria
Chambers
Colorado
Fort Bend
Galveston
Harris
Liberty
Matagorda
Montgomery
Walker
Waller
Wharton

CITIES OVER 25,000 (16)

Baytown
Conroe
Deer Park
Friendswood
Galveston
Houston
Huntsville
La Porte
Lake Jackson
League City
Missouri City
Pasadena
Pearland
Rosenberg
Sugar Land
Texas City

HOME RULE CITIES (37)

Alvin
Angleton
Bay City
Bellaire
Cleveland
Clute
Dayton
Dickinson
El Campo
Freeport
Fulshear
Galena Park
Hempstead
Hitchcock
Humble
Jacinto City
Jersey Village
Katy
La Marque
Liberty
Manvel
Mont Belvieu
Nassau Bay
Palacios
Prairie View
Richmond
Richwood
Santa Fe
Seabrook
Sealy
Stafford
Sweeny
Tomball
Webster
West University Place
Wharton
Willis

GENERAL LAW CITIES (55)

Anahuac
Arcola
Bayou Vista
Beach City
Bellville
Brazoria
Brookshire
Brookside
Village
Bunker Hill Village
Clear Lake Shores
Columbus
Daisetta
Danbury

REGULAR SESSION CITY COUNCIL MEETING PACKET FOR THE MEETING TO BE HELD ON SEPTEMBER 20, 2021

General Assembly

Eagle Lake
East Bernard
El Lago
Hedwig Village
Hillcrest Village
Holiday Lakes
Hunters Creek Village
Iowa Colony
Jamaica Beach
Jones Creek
Kemah
Kendleton
Magnolia
Meadows Place
Morgan's Point
Needville
New Waverly
Oak Ridge North
Old River-Winfree
Oyster Creek
Panorama Village
Pattison
Piney Point Village
Riverside
San Felipe
Shenandoah
Shoreacres
South Houston
Southside Place
Splendora
Spring Valley Village
Stagecoach
Surfside Beach
Taylor Lake Village
Thompsons
Tiki Island
Waller
Wallis
Weimar
West Columbia
Weston Lakes

INDEPENDENT SCHOOL DISTRICTS (11)

Alief ISD
Columbia-Brazoria ISD
Deer Park ISD
Fort Bend ISD
Hempstead ISD
Hitchcock ISD
Huntsville ISD
Magnolia ISD
Needville ISD
Pearland ISD
Waller ISD

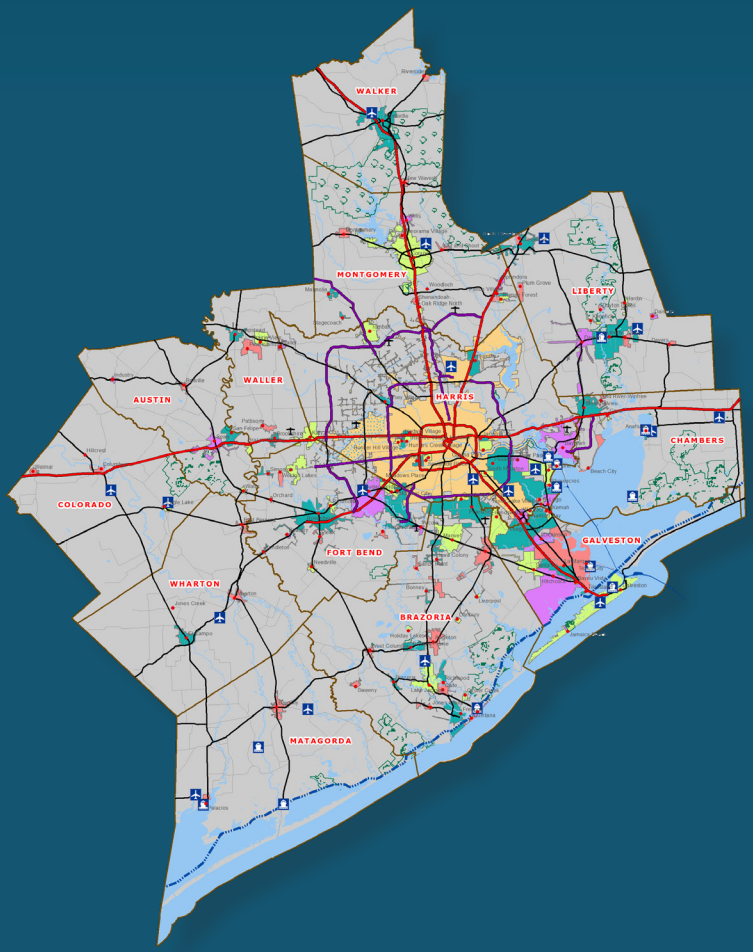

REGULAR SESSION CITY COUNCIL MEETING PACKET FOR THE MEETING TO BE HELD ON SEPTEMBER 20, 2021

Advisory Committees & Affiliate Groups

Advisory committees and its affiliate groups are an essential part of the work of H-GAC. The leadership and knowledge of the volunteers that serve on these committees is the key to their success. Many of H-GAC's advisory committees are appointed by H-GAC's board, based upon nominations from individual board members and other groups.

ADVISORY COMMITTEES

- Aging Programs Advisory Committee
- Clean Rivers Program Committees
- Criminal Justice Advisory Committee
- Geographic Data Workgroup
- Natural Resources Advisory Committee
- Regional Air Quality Planning Advisory Committee
- Regional Flood Management Council
- Regional Homeland Security Coordinating Council
- Solid Waste Management Committee

AFFILIATE GROUPS

- Area Emission Reduction Credit Organization
- Corporation for Regional Excellence
- Energy Purchasing Corporation
- Geographic Data Workgroup
- Gulf Coast Economic Development District
- Gulf Coast Regional 9-1-1 Emergency Communications District
- Gulf Coast Workforce Board
- Houston-Galveston Area Local Development Corporation
- Transportation Policy Council

REGULAR SESSION CITY COUNCIL MEETING PACKET FOR THE MEETING TO BE HELD ON SEPTEMBER 20, 2021

Staff Contacts

9-1-1	Chuck Wemple	(713) 993-4514
Aerial Imagery	Brooks Andrews	(713) 993-4519
Aging/Senior Citizens	Curtis Cooper	(713) 993-4534
Air Quality – Conformity Analysis	Graciela Lubertino	(713) 993-4582
Bike Byways/Trails	Jamila Owens	(832) 681-2522
Census Information	Pramod Sambidi	(713) 993-2451
Clean Cities	Sandra Holliday	(713) 499-6671
Clean Vehicles	Sandra Holliday	(713) 499-6671
Clean Rivers	Todd Running	(713) 993-4549
Communications and Outreach	Meagan Coughlin	(713) 993-4504
Commute Solutions	Jamila Owens	(832) 681-2522
Comprehensive Planning	Jeff Taebel	(713) 993-4560
Congestion Management	Alan Rodenstein	(713) 993-2407
Cooperative Purchasing – HGACBuy	Ronnie Barnes	(713) 499-6665
Crime Prevention/Crime Stoppers	Madeline McGallion	(713) 993-2427
Crime Victims	Breann Stewart	(832) 681-2515
Criminal Justice	Larry Smith	(713) 993-2455
Disaster Recovery	Jeff Taebel	(713) 993-4560
Economic Development	Jillian Donatto	(631) 897-3817
Electronic Recycling	Erin Livingston	(832) 681-2525
Emergency Preparedness	Justin Riley	(832) 681-2548
Employment Data	Pramod Sambidi	(713) 993-2451
Evacuation Planning	Stephan Gage	(713) 499-6692
Floodplains/Flooding	Justin Bower	(713) 499-6653
Forecast – Population and Employment	Pramod Sambidi	(713) 993-2451
Freight and Goods Movement	Allie Isbell	(713) 993-2411
Geographic Data Workgroup	Brooks Andrews	(713) 993-4519
Household Hazardous Waste	Erin Livingston	(832) 681-2525
Juvenile Delinquency Prevention	Breann Stewart	(832) 681-2515
Labor Market Information	Parker Harvey	(713) 993-2462
Land Use Data	Sungmin Lee	(832) 681-2525
Landfills	Erin Livingston	(832) 681-2525
Law Enforcement Training	Larry Smith	(713) 993-2455
Livable Centers	Anita Hollmann	(713) 993-4857

REGULAR SESSION CITY COUNCIL MEETING PACKET FOR THE MEETING TO BE HELD ON SEPTEMBER 20, 2021

Newly Elected Officials Workshop	Cynthia Jones	(713) 993-4591
Ombudsman Program/Nursing Homes	Lisa Hayes	(713) 993-4562
Parks	Andrea Tantillo	(832) 681-2507
Plans and Projects Review	Rick Guerrero	(713) 993-4598
Procurement	Kristina Kollaja	(713) 993-2417
Public Safety Answering Points	Kim Ward	(713) 993-2459
Public Transportation	Trenee-Elaine Bailey	(713) 993-4532
Rail Studies	Allie Isbell	(713) 993-2411
Recycling	Erin Livingston	(832) 681-2525
Regional Economic Data	Pramod Sambidi	(713) 993-2451
Regional Transportation Data	Vishu Lingala	(713) 993-4561
Small Business Loans	Omar Fortune	(713) 993-2409
Solid Waste	Erin Livingston	(832) 681-2525
Transportation Improvement Program	Adam Beckom	(713) 993-4567
Transportation Policy Council	Patrick Mandapaka	(713) 993-4513
Transportation Safety Council	Stephan Gage	(713) 499-6692
Transportation Advisory Committee	Patrick Mandapaka	(713) 993-4513
Travel Demand Modeling	Chris van Slyke	(713) 993-4574
Water Quality/Storm Water/ Wastewater	Todd Running	(713) 993-4549
Workforce Solutions	Mike Temple	(713) 993-4524



A Final Word from Mayor Emeritus Tom Reid

The story of the Houston-Galveston region has been one of tremendous growth. When I moved to Pearland in 1965 working for the Johnson Space Center, it was a small town with a population of 3,500 residents. It didn't have a public library or a university campus. Now, Pearland has these and so much more. It has grown into one of the largest cities in the Texas Gulf Coast area. Every neighborhood, town, and city in our region – from the rural counties that mark our borders to the urban melting pot that is Houston – has experienced this growth.

As we look to a post-pandemic world, that growth will continue. People will keep flocking here by the thousands, driven by the call of good-paying jobs, affordable living, family-centered communities, and entrepreneurial centers. Such rapid growth unchecked will put major strain on our fiscal, infrastructural, and environmental resources. We're already seeing the growing pains in our air and water quality issues, our increasingly complex transportation system, and the growing need for connectivity. Federal and state regulations will also become ever more important, especially as we move to address the existential threat of climate change.

H-GAC is a proven leader in fostering cooperation, addressing state and federal compliance, and providing the critical support its member cities and counties need to grow strategically and sustainably. The strong membership of our board, forward-thinking mindset of H-GAC's leaders, and proactiveness of its staff in anticipating challenges and finding solutions have never ceased to amaze me. Based on H-GAC's projections of future water supplies for city water systems, Pearland secured water rights to the Brazos River. We are now building a 10 million gallon per day service water treatment plant addressing Pearland's water needs through 2065. Such success stories exist across the region. They demonstrate how H-GAC empowers us to be strong partners and what we accomplish when we all work together.

I encourage all our members – new or existing – to be active and stay active at H-GAC. Attend meetings regularly, get to know your fellow members and H-GAC staff, and listen closely to their guidance. Take advantage of the resources and services H-GAC provides. It is one of the best investments you'll ever make. To the experts at H-GAC, continue doing what you're doing. Keep moving forward and embrace every chance to learn and grow.

It's been a true honor to serve my city and my region. I'm proud to have worked with such qualified, talented individuals and of all we've accomplished together. We faced a challenging year, but the future is full of hope and opportunity. Whatever comes our way, H-GAC will be there to guide us. We will grow stronger and we will thrive together.

Connect with Us

HOUSTON-GALVESTON AREA COUNCIL
P.O. Box 22777
Houston, TX 77227-2777
713-627-3200

Houston-Galveston Area Council

Learn more about H-GAC programs, services, and initiatives by visiting h-gac.com or by following us on social media.

@HouGalvAreaCog
Facebook
Twitter
LinkedIn
Instagram
YouTube

CITY COUNCIL
CITY OF JERSEY VILLAGE, TEXAS
AGENDA REQUEST

AGENDA DATE: September 20, 2021 **AGENDA ITEM:** H4

AGENDA SUBJECT: Discuss with possible action either a contract extension with the audit firm of Belt Harris Pechacek, LLLP or the preparation of an RFP for audit services for a period of three year.

Department/Prepared By: Isabel Kato **Date Submitted: September 13, 2021**

EXHIBITS: Engagement Letter Belt Harris Pechacek

BUDGETARY IMPACT:		
	Required Expenditure:	$ 0
	Amount Budgeted:	0
	Appropriation Required:	$ 0

CITY MANAGER APPROVAL:

BACKGROUND INFORMATION:

The contract between the City of Jersey Village and the audit firm of Belt Harris Pechacek, LLLP has expired. They have offered to extend their relationship with the City of Jersey Village for additional three years starting with fiscal year 2020-2021 end of the year audit. Belt Harris Pechacek, LLLP has been the external auditors for the City of Jersey Village since September 2009.

RECOMMENDED ACTION:

Due to the personal service nature of this agreement and the amount of time that this firm had audited the city books, staff is respectfully requesting from City Council the extension of the contract with our current auditors Belt Harris Pechacek, LLLP for audit services for a three-year period.

REGULAR SESSION CITY COUNCIL MEETING PACKET FOR THE MEETING TO BE HELD ON SEPTEMBER 20, 2021

REGULAR SESSION CITY COUNCIL MEETING PACKET FOR THE MEETING TO BE HELD ON SEPTEMBER 20, 2021

Auditing Texas Governments with Excellence

Engagement Letter - Single Audit

September 10, 2021

The Honorable Bobby Warren, Mayor
City of Jersey Village
16327 Lakeview Drive
Jersey Village, Texas 77040-1999

We are pleased to confirm our understanding of the services we are to provide for the City of Jersey Village (the "City") for the years ended September 30, 2021, 2022, and 2023.

Audit Scope and Objectives

We will audit the financial statements of the governmental activities, the business-type activities, the discretely presented component unit, each major fund, the aggregate remaining fund information, and the disclosures, which collectively comprise the basic financial statements of the City as of and for the years ended September 30, 2021, 2022, and 2023.

The component unit will be audited as part of the audit of the financial statements of the City as noted below:

1. Jersey Village Crime Control and Prevention District: Discretely Presented, No Separate Financial Statements

Accounting standards generally accepted in the United States of America (GAAS) provide for certain Required Supplementary Information (RSI), such as Management's Discussion and Analysis (MD&A), to supplement the City's basic financial statements. Such information, although not a part of the basic financial statements, is required by the Governmental Accounting Standards Board who considers it to be an essential part of financial reporting for placing the basic financial statements in an appropriate operational, economic, or historical context. As part of our engagement, we will apply certain limited procedures to the City's RSI in accordance with GAAS. These limited procedures will consist of inquiries of management regarding the methods of preparing the information and comparing the information for consistency with management's responses to our inquiries, the basic financial statements, and other knowledge we obtained during our audit of the basic financial statements. We will not express an opinion or provide any assurance on the information because the limited procedures do not provide us with sufficient evidence to express an opinion or provide any assurance. The following RSI is required by U.S. generally accepted accounting principles (GAAP) and will be subjected to certain limited procedures, but will not be audited:

1. Management’s Discussion and Analysis
2. Budgetary Comparison Schedule(s)
3. Pension Schedule(s) as applicable
4. OPEB Schedule(s) as applicable

We have also been engaged to report on supplementary information other than RSI that accompanies the City's financial statements. We will subject the following supplementary information to the auditing procedures applied in our audit of the financial statements and certain additional procedures, including comparing and reconciling such

information directly to the underlying accounting and other records used to prepare the financial statements or to the financial statements themselves, and other additional procedures in accordance with GAAS, and we will provide an opinion on it in relation to the financial statements as a whole in a report combined with our auditors' report on the financial statements:

1. Combining Statement(s) and Schedule(s)
2. Schedule of Expenditures of Federal Awards

In connection with our audit of the basic financial statements, we will read the following other information and consider whether a material inconsistency exists between the other information and the basic financial statements, or the other information otherwise appears to be materially misstated. If, based on the work performed, we conclude that an uncorrected material misstatement of the other information exists, we are required to describe it in our report.

2. Statistical Section
3. Introductory Section

The objectives of our audit are to obtain reasonable assurance as to whether the financial statements as a whole are free from material misstatement, whether due to fraud or error; issue an auditors' report that includes our opinion about whether your financial statements are fairly presented, in all material respects, in conformity with GAAP; and report on the fairness of the supplementary information referred to in the second paragraph when considered in relation to the financial statements as a whole. Reasonable assurance is a high level of assurance but is not absolute assurance and, therefore, is not a guarantee that an audit conducted in accordance with GAAS will always detect a material misstatement when it exists. Misstatements, including omissions, can arise from fraud or error and are considered material if there is a substantial likelihood that, individually or in the aggregate, they would influence the judgment of a reasonable user made based on the financial statements. The objective also includes reporting on---

1. Internal control over financial reporting and compliance with the provisions of laws, regulations, contracts, and award agreements, noncompliance with which could have a material effect on the financial statements in accordance with *Government Auditing Standards*.

2. Internal control over compliance related to major programs and an opinion (or disclaimer of opinion) on compliance with federal statutes, regulations, and the terms and conditions of federal awards that could have a direct and material effect on each major program in accordance with the Single Audit Act Amendments of 1996 and Title 2 U.S. *Code of Federal Regulations* Part 200, *Uniform Administrative Requirements, Cost Principles, and Audit Requirements for Federal Awards* (the "Uniform Guidance").

The *Government Auditing Standards* report on internal control over financial reporting and on compliance and other matters will include a paragraph that states that (1) the purpose of the report is solely to describe the scope of testing of internal control and compliance and the results of that testing, and not to provide an opinion on the effectiveness of the entity's internal control or on compliance, and (2) the report is an integral part of an audit performed in accordance with *Government Auditing Standards* in considering the entity's internal control and compliance. The Uniform Guidance report on internal control over compliance will include a paragraph that states that the purpose of the report on internal control over compliance is solely to describe the scope of testing of internal control over compliance and the results of that testing based on the requirements of the Uniform Guidance. Both reports will state that the report is not suitable for any other purpose.

Our audit will be conducted in accordance with auditing standards generally accepted in the United States of America; the standards for financial audits contained in *Government Auditing Standards*, issued by the Comptroller General of the United States; the Single Audit Act Amendments of 1996; and the provisions of the Uniform Guidance, and will include tests of accounting records, a determination of major program(s) in accordance with the Uniform Guidance, and other procedures we consider necessary to enable us to express such an opinion.

REGULAR SESSION CITY COUNCIL MEETING PACKET FOR THE MEETING TO BE HELD ON SEPTEMBER 20, 2021

REGULAR SESSION CITY COUNCIL MEETING PACKET FOR THE MEETING TO BE HELD ON SEPTEMBER 20, 2021

Auditors' Responsibilities for the Audit of the Financial Statements

We will conduct our audit in accordance with GAAS and will include tests of your accounting records and other procedures we consider necessary to enable us to express such opinions. As part of an audit in accordance with GAAS, we exercise professional judgment and maintain professional skepticism throughout the audit.

We will evaluate the appropriateness of accounting policies used and the reasonableness of significant accounting estimates made by management. We will also evaluate the overall presentation of the financial statements, including the disclosures, and determine whether the financial statements represent the underlying transactions and events in a manner that achieves fair presentation. We will plan and perform the audit to obtain reasonable assurance about whether the financial statements are free of material misstatement, whether from (1) errors, (2) fraudulent financial reporting, (3) misappropriation of assets, or (4) violations of laws or governmental regulations that are attributable to the government or to acts by management or employees acting on behalf of the government. Because the determination of abuse is subjective, *Government Auditing Standards* do not expect auditors to provide reasonable assurance of detecting abuse.

Because of the inherent limitations of an audit, combined with the inherent limitations of internal control, and because we will not perform a detailed examination of all transactions, there is an avoidable risk that some material misstatements may not be detected by us, even though the audit is properly planned and performed in accordance with GAAS and *Government Auditing Standards*. In addition, an audit is not designed to detect immaterial misstatements or violations of laws or governmental regulations that do not have a direct and material effect on the financial statements or major programs. However, we will inform the appropriate level of management of any material errors, fraudulent financial reporting, or misappropriation of assets that come to our attention. We will also inform the appropriate level of management of any violations of laws or governmental regulations that come to our attention, unless clearly inconsequential. We will include such matters in the reports required for a Single Audit. Our responsibility as auditors is limited to the period covered by our audit and does not extend to any later periods for which we are not engaged as auditors.

We will also conclude, based on the audit evidence obtained, whether there are conditions or events, considered in the aggregate, that raise substantial doubt about the government's ability to continue as a going concern for a reasonable period of time.

Our procedures will include tests of documentary evidence supporting the transactions recorded in the accounts, and may include tests of the physical existence of inventories, and direct confirmation of receivables and certain assets and liabilities by correspondence with selected creditors, and financial institutions. We will request written representations from your attorneys as part of the engagement, and they may bill you for responding to this inquiry.

Audit Procedures-Internal Control

We will obtain an understanding of the government and its environment, including internal control relevant to the audit, sufficient to identify and assess the risks of material misstatement of the financial statements, whether due to fraud or error, and to design and perform audit procedures responsive to those risks and obtain evidence that is sufficient and appropriate to provide a basis for our opinions. Tests of controls may be performed to test the effectiveness of certain controls that we consider relevant to preventing and detecting errors and fraud that are material to the financial statements and to preventing and detecting misstatements resulting from illegal acts and other noncompliance matters that have a direct and material effect on the financial statements. Our tests, if performed, will be less in scope than would be necessary to render an opinion on internal control and, accordingly, no opinion will be expressed in our report on internal control issued pursuant to *Government Auditing Standards*.

As required by the Uniform Guidance, we will perform tests of controls over compliance to evaluate the effectiveness of the design and operation of controls that we consider relevant to preventing or detecting material noncompliance with compliance requirements applicable to each major federal award program. However, our tests will be less in scope than would be necessary to render an opinion on those controls and, accordingly, no opinion will be expressed in our report on internal control issued pursuant to the Uniform Guidance.

The risk of not detecting a material misstatement resulting from fraud is higher than for one resulting from error, as fraud may involve collusion, forgery, intentional omissions, misrepresentation, or the override of internal control. An audit is not designed to provide assurance on internal control or to identify significant deficiencies or material weaknesses in internal control. Accordingly, we will express no such opinion. However, during the audit, we will

REGULAR SESSION CITY COUNCIL MEETING PACKET FOR THE MEETING TO BE HELD ON SEPTEMBER 20, 2021

communicate to management and those charged with governance internal control related matters that are required to be communicated under AICPA professional standards, *Government Auditing Standards*, and the Uniform Guidance.

Audit Procedures-Compliance

As part of obtaining reasonable assurance about whether the financial statements are free of material misstatement, we will perform tests of the City's compliance with provisions of applicable laws, regulations, contracts, and agreements, including grant agreements. However, the objective of our audit will not be to provide an opinion on overall compliance, and we will not express such an opinion in our report on compliance issued pursuant to *Government Auditing Standards*.

The Uniform Guidance requires that we also plan and perform the audit to obtain reasonable assurance about whether the auditee has complied with federal statutes, regulations, and the terms and conditions of federal awards applicable to major programs. Our procedures will consist of tests of transactions and other applicable procedures described in the *OMB Compliance Supplement* for the types of compliance requirements that could have a direct and material effect on each of the City's major programs. The purpose of these procedures will be to express an opinion on the City's compliance with requirements applicable to each of its major programs in our report on compliance issued pursuant to the Uniform Guidance.

Other Services

We will also assist in preparing the financial statements, schedule of expenditures of federal awards, and related disclosures of the City in conformity with GAAP and the Uniform Guidance based on information provided by you. These nonaudit services do not constitute an audit under *Government Auditing Standards* and such services will not be conducted in accordance with *Government Auditing Standards.*

We will perform the services in accordance with applicable professional standards. The other services are limited to the financial statements, schedule of expenditures of federal awards, and related disclosures services previously defined. We, in our sole professional judgment, reserve the right to refuse to perform any procedure or take any action that could be construed as assuming management responsibilities.

Nonaudit Services

In connection with the engagement, we will perform services unrelated to our attest function. The additional services we will provide include:

1. **Preparation of Documents**
   We will assist in preparing the financial statements and related notes of the City in conformity with GAAP based on information provided by the City.
2. **Advisory Services**
   We will provide routine advisory services through phone calls, conferences, or otherwise, in connection with incidental matters arising during the year. We encourage open lines of communication throughout the year as part of our services.
3. **Correspondence**
   We will handle all normal correspondence from grantor, regulatory, or oversight agencies related to the audit.
4. **Professional Proofing**
   To ensure documents issued in connection with the audit engagement are professional in appearance, we will submit both client-prepared information, as well as documents created entirely by the auditor, to an independent professional proofreader for a cover-to-cover inspection. This review will include consistent formatting, grammar, logic, and any other items that may detract from the document. This process is over and above technical reviews performed.
5. **Printing and Binding**
   All final hard copy documents will be printed on a 1200 dpi or better resolution copier and bright white report paper. Reports will be bound with GBC-brand plastic combs with 30 mil oversized covers. We will manually inspect each page from one document and spot check remaining reports for printing errors. Our reports will be centered, properly aligned, and free of smudges and other detracting elements.

6. **Electronic Adobe Searchable PDF**
   In addition to providing hard copy documents, we will also provide all final documents in electronic image files in Adobe PDF format, suitable for posting in electronic agenda packages, posting on websites, or transmitting by email to regulatory agencies.
7. **Client Portal - Auditbox**
   We will provide the City access to our proprietary AuditBox online site to provide a central repository where both the City's personnel and audit team members can see documents being exchanged during the process to eliminate duplicate requests from audit team members. Both the City's documents, as well as final audit documents, will be hosted on the site providing an archive of information that new personnel may access in subsequent years, if information is needed regarding what was provided for a prior year audit or a copy of audit documents issued.

Responsibilities of Management for the Financial Statements

Our audit will be conducted on the basis that you acknowledge and understand your responsibility for (1) designing, implementing, and maintaining effective internal controls relevant to the preparation and fair presentation of financial statements that are free from material misstatement, whether due to fraud or error, including internal controls over federal awards, and for monitoring ongoing activities to help ensure that appropriate goals and objectives are met; (2) following laws and regulations; (3) ensuring that there is reasonable assurance that government programs are administered in compliance with compliance requirements; and (4) ensuring that management is reliable and financial information is reliable and properly reported. Management is also responsible for implementing systems designed to achieve compliance with applicable laws, regulations, contracts, and grant agreements. You are also responsible for the selection and application of accounting principles; and for the preparation and fair presentation of the financial statements, schedule of expenditures of federal awards, and all accompanying information in conformity with GAAP; and for compliance with applicable laws and regulations (including federal statutes) and the provisions of contracts and grant agreements (including award agreements). Your responsibilities also include identifying significant contractor relationships in which the contractor has responsibility for program compliance and for the accuracy and completeness of that information.

Management is also responsible for making drafts of financial statements, all financial records and related information available to us and for the accuracy and completeness of that information (including information from outside of the general and subsidiary ledgers). You are also responsible for providing us with (1) access to all information of which we are aware that is relevant to the preparation and fair presentation of the financial statements, such as records, documentation, identification of all related parties and all related-party relationships and transactions, and other matters; (2) access to personnel, accounts, books, records, supporting documentation, and other information as needed to perform an audit under the Uniform Guidance; (3) additional information that we may request for the purpose of the audit; and (4) unrestricted access to persons within the government from whom we determine it necessary to obtain audit evidence. At the conclusion of our audit, we will require certain written representations from you about the financial statements and related matters.

Your responsibilities include adjusting the financial statements to correct material misstatements and confirming to us in the management representation letter that the effects of any uncorrected misstatements aggregated by us during the current engagement and pertaining to the latest period presented are immaterial, both individually and in the aggregate, to the financial statements of each opinion unit as a whole.

You are responsible for the design and implementation of programs and controls to prevent and detect fraud, and for informing us about all known or suspected fraud affecting the government involving (1) management, (2) employees who have significant roles in internal control, and (3) others where the fraud could have a material effect on the financial statements. Your responsibilities include informing us of your knowledge of any allegations of fraud or suspected fraud affecting the government received in communications from employees, former employees, grantors, regulators, or others. In addition, you are responsible for identifying and ensuring that the government complies with applicable laws, regulations, contracts, agreements, and grants. Management is also responsible for taking timely and appropriate steps to remedy fraud and noncompliance with provisions of laws, regulations, contracts, and grant agreements, or abuse that we report. Additionally, as required by the Uniform Guidance, it is management's responsibility to evaluate and monitor noncompliance with federal statutes, regulations, and the terms and conditions of federal awards; take prompt action when instances of noncompliance are identified including noncompliance identified in audit findings; promptly follow up and take corrective action on reported audit findings; and prepare a summary schedule of prior audit findings and a separate corrective action plan. The summary schedule of prior audit findings should be available for our review prior to the beginning of our audit

REGULAR SESSION CITY COUNCIL MEETING PACKET FOR THE MEETING TO BE HELD ON SEPTEMBER 20, 2021

fieldwork.

You are responsible for identifying all federal awards received and understanding and complying with the compliance requirements and for the preparation of the schedule of expenditures of federal awards (including notes and noncash assistance received) in conformity with the Uniform Guidance. You agree to include our report on the schedule of expenditures of federal awards in any document that contains and indicates that we have reported on the schedule of expenditures of federal awards. You also agree to make the audited financial statements readily available to intended users of the schedule of expenditures of federal awards no later than the date the schedule of expenditures of federal awards is issued with our report thereon. Your responsibilities include acknowledging to us in the written representation letter that (1) you are responsible for presentation of the schedule of expenditures of federal awards in accordance with the Uniform Guidance; (2) you believe the schedule of expenditures of federal awards, including its form and content, is stated fairly in accordance with the Uniform Guidance; (3) the methods of measurement or presentation have not changed from those used in the prior period (or, if they have changed, the reasons for such changes); and (4) you have disclosed to us any significant assumptions or interpretations underlying the measurement or presentation of the schedule of expenditures of federal awards.

You are also responsible for the preparation of the other supplementary information, on which we have been engaged to report, in conformity with GAAP. You agree to include our report on the supplementary information in any document that contains, and indicates that we have reported on, the supplementary information. You also agree to include the audited financial statements with any presentation of the supplementary information that includes our report thereon. Your responsibilities include acknowledging to us in the representation letter that (1) you are responsible for presentation of the supplementary information in accordance with GAAP; (2) you believe the supplementary information, including its form and content, is fairly presented in accordance with GAAP; (3) the methods of measurement or presentation have not changed from those used in the prior period (or, if they have changed, the reasons for such changes); and (4) you have disclosed to us any significant assumptions or interpretations underlying the measurement or presentation of the supplementary information.

Management is responsible for establishing and maintaining a process for tracking the status of audit findings and recommendations. Management is also responsible for identifying and providing report copies of previous financial audits, attestation engagements, performance audits, or other studies related to the objectives discussed in the Audit Objectives section of this letter. This responsibility includes relaying to us corrective actions taken to address significant findings and recommendations resulting from those audits, attestation engagements, performance audits, or studies. You are also responsible for providing management's views on our current findings, conclusions, and recommendations, as well as your planned corrective actions, for the report, and for the timing and format for providing that information.

You agree to assume all management responsibilities for the financial statements preparation, schedule of expenditures of federal awards, related disclosures, and any other nonattest services we provide; oversee the services by designating an individual, preferably from senior management, with suitable skill, knowledge, or experience; evaluate the adequacy and results of those services; and accept responsibility for them.

Engagement Administration, Fees, and Other

We understand that your employees will prepare all cash, accounts receivable, or other confirmations we request and will locate any documents selected by us for testing.

At the conclusion of the engagement, we will complete the appropriate sections of the Data Collection Form that summarizes our audit findings. It is management's responsibility to electronically submit the reporting package (including financial statements, schedule of expenditures of federal awards, summary schedule of prior audit findings, auditors' reports, and corrective action plan) along with the Data Collection Form to the Federal Audit Clearinghouse. We will coordinate with you the electronic submission and certification. The Data Collection Form and the reporting package must be submitted within the earlier of 30 calendar days after receipt of the auditors' reports or nine months after the end of the audit period.

We will provide copies of our reports to the City; however, management is responsible for distribution of the reports and the financial statements. Unless restricted by law or regulation, or containing privileged and confidential information, copies of our reports are to be made available for public inspection.

The audit documentation for this engagement is the property of Belt Harris Pechacek, LLLP and constitutes

REGULAR SESSION CITY COUNCIL MEETING PACKET FOR THE MEETING TO BE HELD ON SEPTEMBER 20, 2021

confidential information. However, subject to applicable laws and regulations, audit documentation and appropriate individuals will be made available upon request and in a timely manner to any oversight agency or its designee, a federal agency providing direct or indirect funding, or the U.S. Government Accountability Office for purposes of a quality review of the audit, to resolve audit findings, or to carry out oversight responsibilities. We will notify you of any such request. If requested, access to such audit documentation will be provided under the supervision of Belt Harris Pechacek, LLLP personnel. Furthermore, upon request, we may provide copies of selected audit documentation to the aforementioned parties. These parties may intend, or decide, to distribute the copies or information contained therein to others, including other governmental agencies.

The audit documentation for this engagement will be retained for a minimum of five years after the report release date or for any additional period requested by the oversight agency. If we are aware that a federal awarding agency, pass-through entity, or auditee is contesting an audit finding, we will contact the party(ies) contesting the audit finding for guidance prior to destroying the audit documentation.

Fees for our services are based on the actual time spent at our standard hourly rates, plus travel and other out-of-pocket costs such as report production, word processing, postage, etc. Our standard hourly rates vary according to the degree of responsibility involved and the experience level of the personnel assigned to your audit. Items that likely will increase the fee estimate include:

1. Assistance with addressing matters that were designated as management's responsibility, which include closing schedules and closing entries.

2. Submission of audit data within 60 days of a client requested completion date or filing deadline, requiring overtime hours to meet the deadline.

3. Changes in accounting pronouncements, professional standards, laws, and regulations not known to us as of the date of this letter that have a significant impact on time requirements.

4. Changes in the operations and significant matters that materially change the audit scope such as evaluation of the impact of joint ventures, debt issuance/refunding/advance extinguishment, forbearance agreements, notice of material events, enforcement actions, required corrective actions, self-insurance, environmental liabilities, going concern, and/or other postemployment benefits.

5. Significant increases in State or Federal funding requiring State and/or Federal Single Audits and/or increases to the number of grants classified as major programs by Office of Management and Budget (OMB) or State requirements.

6. Follow up on allegations or discovery of a) noncompliance with laws, regulations, and policies; b) fraud, waste, and abuse; c) significant deficiencies in internal control; d) nepotism; and e) related party transactions.

As customary in the industry, the price quoted is an estimate. In accordance with rules of the State Board of Public Accountancy, we cannot be bound to provide the audit for the amount estimated. However, in practice, we honor our fee quotes unless adverse conditions such as those described above are encountered.

Fee Estimates

	2021	2022	2023
Financial Statement Audit -CAFR	$ 26,900	$ 27,640	$ 28,400
Single Audit-Base Fee	$ 3,850	$ 3,850	$ 3,850
Single Audit-Per Major Program	$ 4,875	$ 4,875	$ 4,875

The proposed fee does not include any additional time related to COVID-19. The impact of COVID-19 is presently unknown and may result in additional compliance procedures, funding, or organizational problems, which may require additional time to address. Any additional time would be billed at our standard hourly rates.

REGULAR SESSION CITY COUNCIL MEETING PACKET FOR THE MEETING TO BE HELD ON SEPTEMBER 20, 2021

Federal Single Audit Engagement

A federal single audit is required by the OMB's Uniform Guidance when federal funds over $750,000 are expended. Federal single audit fees vary based on the number of major programs as defined by OMB. Accordingly, the federal single audit fee consists of a 'Federal Single Audit-Base Fee' to cover basic fixed amounts and the 'Federal Single Audit-Per Major Program Fee', which is the scalable portion dependent on the actual number of major programs. The number of major programs is established by OMB criteria. If a federal single audit is required, there will be at least one major program. Prior year federal single audit reports will help plan for the number of major programs, but they will vary from year to year based on the level of federal funding. Should you not exceed OMB's federal single audit threshold, a federal single audit will not be required. If you anticipate exceeding the federal single audit threshold, please contact us as far in advance as possible so that we can begin doing preliminary federal single audit work.

Non-State Single Audit Engagement

A state single audit is required when grant funds that originated from the State of Texas (this does not include federal monies passed through the State) over $750,000 are expended. State single audit fees vary based on the number of major programs as defined by the *State of Texas Single Audit Circular*. The additional technical verbiage that is necessary when a state single audit is required is not included within this engagement letter, nor does the proposed engagement fee include additional fees related to a state single audit. Should you exceed the state single audit threshold, a new engagement letter will be required.

Billing Protocol

Our invoices for these fees will be rendered each month as work progresses and are payable on presentation. Generally, 40 percent will be billed and payable upon completion of interim audit procedures (normally one to four months before year end) and 60 percent after a draft of the financial statements is issued. Accordingly, the fee will be split 40/60 between budget years. In accordance with our firm policies, work may be suspended if your account becomes 30 days or more overdue and may not be resumed until your account is paid in full. If we elect to terminate our services for nonpayment, our engagement will be deemed to have been completed upon written notification of termination, even if we have not completed our report. You will be obligated to compensate us for all time expended and to reimburse us for all out-of-pocket costs through the date of termination. The above fee is based on anticipated cooperation from your personnel and the assumption that unexpected circumstances will not be encountered during the audit. If significant additional time is necessary, we will discuss it with you and arrive at a new fee estimate before we incur the additional costs.

Required Attachments

Government Auditing Standards require that we provide you with a copy of our most recent external peer review report and any letter of comment, and any subsequent peer review reports and letters of comment received during the period of the contract. Our 2018 peer review accompanies this letter.

Reporting

We will issue a written report upon completion of our audit of the City's financial statements. Our report will be addressed to those charged with governance of the City. Circumstances may arise in which our report may differ from its expected form and content based on the results of the audit. Depending on the nature of these circumstances, it may be necessary for us to modify our opinions or add an emphasis of matter or other matter paragraph to our auditors' report or, if necessary, withdraw from this engagement. If our opinions are other than unmodified, we will discuss the reasons with you in advance. If, for any reason, we are unable to complete the audit or are unable to form or have not formed opinions, we may decline to express opinions or withdraw from the engagement.

Foreign Terrorists Organizations

Pursuant to Chapter 2252, Texas Government Code, we represent and certify that, at the time of execution of this letter, neither we nor any wholly owned subsidiary, majority-owned subsidiary, parent company, or affiliate of the same (i) engages in business with Iran, Sudan, or any foreign terrorist organization as described in Chapters 806 or 807 of the Texas Government Code or Subchapter F of Chapter 2252 of the Texas Government Code or (ii) is a

REGULAR SESSION CITY COUNCIL MEETING PACKET FOR THE MEETING TO BE HELD ON SEPTEMBER 20, 2021

company listed by the Texas Comptroller of Public Accounts under Sections 806.051, 807.051, or 2252.153 of the Texas Government Code. The term 'foreign terrorist organization' in this paragraph has the meaning assigned to such term in Section 2252.151 of the Texas Government Code.

Vendor Representation Regarding Israel

Pursuant to Chapter 2271, Texas Government Code, we represent that we do not boycott Israel and will not boycott Israel during the term of the contract. The term 'boycott Israel' shall have the meaning ascribed to this term in Section 808.001 of the Texas Government Code.

Required Non-Appropriation Clause

Notwithstanding anything contained in this engagement to the contrary, in the event no funds or insufficient funds are appropriated and budgeted or are otherwise unavailable in any fiscal period for fees due under this engagement agreement, the City will immediately notify us in writing of such occurrence and this agreement shall terminate on the last day of the fiscal period for which appropriations have been received or made.

Authorization of CPA's Disclosure

Any client certified public accountant involved with assisting us shall not be prohibited from disclosure of information required to be made available by the standards of the public accounting profession in reporting on the examination of financial statements. Management understands and provides permission to staff certificate or registration holders as required under the Rules of Professional Conduct, Texas Administrative Code, Title 22, Part 22, Chapter 501, Subchapter C, Section 501.75.

We appreciate the opportunity to be of service to the City and believe this letter accurately summarizes the significant terms of our engagement. If you have any questions, please let us know. If you agree with the terms of our engagement as described in this letter, please sign the enclosed copy and return it to us.

Sincerely,

Belt Harris Pechacek, LLLP
Certified Public Accountants

Authorized by:

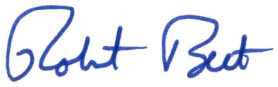

Robert Belt, CPA, CGMA
Managing Partner

RESPONSE:

This letter correctly sets forth the understanding of City of Jersey Village.

_____
The Honorable Bobby Warren, Mayor

_____
Date

REGULAR SESSION CITY COUNCIL MEETING PACKET FOR THE MEETING TO BE HELD ON SEPTEMBER 20, 2021

BUMGARDNERMORRISON

CPAs • Tax • Audit & Accounting

Empowering Peace of Mind

Report on the Firm's System of Quality Control

To the Partners of Belt Harris Pechacek, LLLP
And the Peer Review Committee of the Texas Society of Certified Public Accountants

We have reviewed the system of quality control for the accounting and auditing practice of Belt Harris Pechacek, LLLP (the firm) in effect for the year ended June 30, 2018. Our peer review was conducted in accordance with the Standards for Performing and Reporting on Peer Reviews established by the Peer Review Board of the American Institute of Certified Public Accountants (Standards).

A summary of the nature, objectives, scope, limitations of, and the procedures performed in a System Review as described in the Standards may be found at www.aicpa.org/prsummary. The summary also includes an explanation of how engagements identified as not performed or reported in conformity with applicable professional standards, if any, are evaluated by a peer reviewer to determine a peer review rating.

Firm's Responsibility

The firm is responsible for designing a system of quality control and complying with it to provide the firm with reasonable assurance of performing and reporting in conformity with applicable professional standards in all material respects. The firm is also responsible for evaluating actions to promptly remediate engagements deemed as not performed or reported in conformity with professional standards, when appropriate, and for remediating weaknesses in its system of quality control, if any.

Peer Reviewer's Responsibility

Our responsibility is to express an opinion on the design of the system of quality control and the firm's compliance therewith based on our review.

Required Selections and Considerations

Engagements selected for review included engagements performed under *Government Auditing Standards*, including compliance audits under the Single Audit Act;

As part of our review, we considered reviews by regulatory entities as communicated by the firm, if applicable, in determining the nature and extent of our procedures.

Opinion

In our opinion, the system of quality control for the accounting and auditing practice of Belt Harris Pechacek, LLLP in effect for the year ended June 30, 2018, has been suitably designed and complied with to provide the firm with reasonable assurance of performing and reporting in conformity with applicable professional standards in all material respects. Firms can receive a rating of *pass, pass with deficiency(ies) or fail.* Belt Harris Pechacek, LLLP has received a peer review rating of *pass*.

Bumgardner, Morrison + Company, LLP

BUMGARDNER, MORRISON & COMPANY, LLP
December 14, 2018

Bumgardner, Morrison & Company, LLP
Certified Public Accountants

Members: American Institute of Certified Public Accountants
Texas Society of Certified Public Accountants
AICPA Private Companies Practice Section
AICPA Employee Benefit Plan Audit Quality Center
AICPA Government Audit Quality Center

1501 E Mockingbird Lane, Suite 300
PO Box 3750
Victoria, Texas 77903-3750
Phone: 361.575.0271
Fax: 361.578.0880
Website: BMCcpa.com

REGULAR SESSION CITY COUNCIL MEETING PACKET FOR THE MEETING TO BE HELD ON SEPTEMBER 20, 2021

I. MAYOR AND COUNCIL COMMENTS

Pursuant to Texas Government Code § 551.0415, City Council Members and City staff may make a reports about items of community interest during a meeting of the governing body without having given notice of the report. Items of community interest include:

- Expressions of thanks, congratulations, or condolence;
- Information regarding holiday schedules;
- An honorary or salutary recognition of a public official, public employee, or other citizen, except that a discussion regarding a change in the status of a person's public office or public employment is not an honorary or salutary recognition for purposes of this subdivision;
- A reminder about an upcoming event organized or sponsored by the governing body;
- Information regarding a social, ceremonial, or community event organized or sponsored by an entity other than the governing body that was attended or is scheduled to be attended by a member of the governing body or an official or employee of the municipality; and
- Announcements involving an imminent threat to the public health and safety of people in the municipality that has arisen after the posting of the agenda.

REGULAR SESSION CITY COUNCIL MEETING PACKET FOR THE MEETING TO BE HELD ON SEPTEMBER 20, 2021

J. RECESS THE REGULAR SESSION

Recess the Regular Session to Convene into Executive Session pursuant to the Texas Open Meetings Act, Government Code Section 551.074 – Personnel Matters, Section 551.087 – Economic Development Negotiations, Section 551.072 – Deliberations about Real Property, and Section 551.071 – Consult Attorney.

K. EXECUTIVE SESSION

1. Pursuant to the Texas Open Meetings Act Section 551.074 - Personnel Matters, conduct an Executive Session in order to deliberate the appointment, employment, evaluation, reassignment, duties, discipline, or dismissal of the City Secretary. *City Council*

2. Pursuant to the Texas Open Meetings Act Section 551.074 - Personnel Matters, conduct an Executive Session in order to deliberate the appointment, employment, evaluation, reassignment, duties, discipline, or dismissal of the City Manager. *City Council*

3. Pursuant to the Texas Open Meeting Act Section 551.087 Deliberation Regarding Economic Development Negotiations and Section 551.071 Consultations with Attorney, a closed meeting to deliberate information from a business prospect that seeks to locate in the City. *City Council*

4. Pursuant to the Texas Open Meeting Act Section 551.087 Deliberation Regarding Economic Development Negotiations, Section 551.072 Deliberations about Real Property, and Section 551.071 Consultations with Attorney, a closed meeting to deliberate information from a business prospect that the City seeks to locate in Jersey Village TIRZ Number 2, economic development negotiations, including the possible purchase, exchange or value of real property, related thereto, and to discuss legal matters regarding contractual obligations of the City under existing contracts related to Jersey Village TIRZ Number 2.

L. ADJOURN EXECUTIVE SESSION

Adjourn the Executive Session, stating the date and time the Executive Session ended and Reconvene the Regular Session.

CITY COUNCIL
CITY OF JERSEY VILLAGE, TEXAS
AGENDA REQUEST

AGENDA DATE: September 20, 2021

AGENDA ITEM: M1

AGENDA SUBJECT: Consider setting the City Secretary's compensation for budget year 2021-2022

Dept./Prepared By: Lorri Coody, City Secretary **Date Submitted**: August 18, 2021
EXHIBITS:

BUDGETARY IMPACT:	Required Expenditure:	$
	Amount Budgeted:	$
	Appropriation Required:	$

CITY MANAGER APPROVAL:

BACKGROUND INFORMATION:

After conducting the City Secretary's Evaluation in Executive Session, this item is to set the City Secretary's compensation for budget year 2021-2022.

Should City Council desire to increase the City Secretary's compensation, a suggested motion is provided below.

RECOMMENDED ACTION:

MOTION: I move to set the City Secretary's base salary compensation for budget year 2021-2022 at _____.

REGULAR SESSION CITY COUNCIL MEETING PACKET FOR THE MEETING TO BE HELD ON SEPTEMBER 20, 2021

CITY COUNCIL
CITY OF JERSEY VILLAGE, TEXAS
AGENDA REQUEST

AGENDA DATE: September 20, 2021

AGENDA ITEM: M2

AGENDA SUBJECT: Consider setting the City Manager's compensation for budget year 2021-2022 and consider employment agreement amendments.

Dept./Prepared By: Lorri Coody, City Secretary **Date Submitted**: August 18, 2021

EXHIBITS:

BUDGETARY IMPACT:	Required Expenditure:	$
	Amount Budgeted:	$
	Appropriation Required:	$

CITY MANAGER APPROVAL:

BACKGROUND INFORMATION:

After conducting the City Manager's Evaluation in Executive Session, this item is to set the percent by which the City Manager's salary shall be increased for budget year 2021-2022.

Should City Council desire to increase the City Manager's salary, a suggested motion is provided below.

RECOMMENDED ACTION:

MOTION: I move to increase the City Manager's base salary compensation for budget year 2021-2022 to _____ and approve the employment agreement amendments discussed in executive session.

REGULAR SESSION CITY COUNCIL MEETING PACKET FOR THE MEETING TO BE HELD ON SEPTEMBER 20, 2021

CITY COUNCIL
CITY OF JERSEY VILLAGE, TEXAS
AGENDA REQUEST

AGENDA DATE: September 20, 2021 **AGENDA ITEM:** M3

AGENDA SUBJECT: Discuss and take appropriate action on a Resolution regarding items discussed in closed session regarding economic development negotiations, including the possible purchase, exchange or value of real property, related thereto, and contractual obligations of the City under existing contracts related to Jersey Village TIRZ Number 2.

Department/Prepared By: Austin Bleess **Date Submitted:** September 14, 2021

EXHIBITS:

BUDGETARY IMPACT:	Required Expenditure:	$
	Amount Budgeted:	$
	Appropriation Required:	$

CITY MANAGER APPROVAL:

BACKGROUND INFORMATION:

This item is for the City Council to discuss and take any appropriate action that may be required from the executive session.

RECOMMENDED ACTION:

MOTION:

REGULAR SESSION CITY COUNCIL MEETING PACKET FOR THE MEETING TO BE HELD ON SEPTEMBER 20, 2021